Bidding Documents

PROJECT NO. 801 0024 70 77

PERRIS BOULEVARD WIDENING from Ironwood Avenue to Manzanita Avenue

Account No. 3003-70-77-80001

March 2014

CITY OF MORENO VALLEY
DECEMBER 3, 1984

3/17/14

REGISTERED PROFESSIONAL ENGINEER
BRIAN M. SMITH
C 70690
EXP. 6/30/15
CIVIL
STATE OF CALIFORNIA

CITY OF MORENO VALLEY
PUBLIC WORKS DEPARTMENT
CAPITAL PROJECTS DIVISION
14177 FREDERICK STREET
P.O. BOX 88005
MORENO VALLEY, CA 92552-0805

BIDDING DOCUMENTS

PROJECT NO. 801 0024 70 77
PERRIS BOULEVARD WIDENING
from Ironwood Avenue to Manzanita Avenue`

PREAMBLE

The City Special Provisions contained herein supplement and/or modify the General Provisions and Technical Provisions of the Standard Specifications for Public Works Construction ("Greenbook") latest edition. The City Special Provisions are arranged in accordance with the numbering format used in the Standard Specifications, with subsections added where necessary.

Each and every provision of law required to be inserted in the Bidding Documents shall be deemed to be inserted therein, and the Bidding Documents shall be read and enforced as though it were included therein.

TABLE OF CONTENTS

Section	Title
	Cover Sheet
00002	Preamble
00003	Table of Contents
00020	Notice Inviting Bids
00100	Instructions to Bidders
00300	Bidder's Proposal
00301	Subcontractor Listing
00302	Bidder's Bond
00303	Contractor's Statement
00500	Standard Form of Agreement Between City and Contractor
00600	Contractor's Bonds
00601	Faithful Performance Bond
00602	Labor and Materials Payment Bond
00700	City Special Provisions
00701	Part 1 – General Provisions
	- Section 1 – Terms, Definitions, Abbreviations, Units of Measure, and Symbols
	- Section 2 – Scope and Control of Work
	- Section 3 – Changes in Work
	- Section 4 – Control of Materials
	- Section 5 – Utilities
	- Section 6 – Prosecution, Progress, and Acceptance of the Work
	- Section 7 – Responsibilities of the Contractor
	- Section 8 – [not used]
	- Section 9 – Measurement and Payment
00702	Part 2 – Technical Provisions
	Project Specific Scope of Work 1
	Mobilization 7
	Notification of Residents and Businesses 8
	Red Imported Fire Ants (RIFA) 9
	Street Maintenance 9
	Dust Control 10
	Clean Up 12
	Pothole 13
	Protection and Restoration of Existing Improvements 13
	Protection and Restoration of Underground Utilities and Facilities 14
	Cooperation and Collateral Work 15
	Tree Removal and Recycling 16
	Green Waste Recycling 16
	Portland Cement Concrete Removal and Recycling 17
	Weed and Pest Abatement 17
	Rodent Control 19

Section	Title	
	Project Identification Sign	20
	Project Completion Sign	21
	Stormwater and Non-Stormwater Pollution Control	21
	Environmental Mitigation per Special Provisions	33
	Traffic Control	35
	Temporary Video Detection System	40
	Clearing, Grubbing, and Removals	49
	Adjust Existing Street Survey Monument	52
	AC Pavement Removal	53
	Cold Mill Existing AC per Plans	53
	Crack Seal Existing AC Pavement	54
	Unclassified Excavation	55
	Unclassified Fill	55
	Subgrade Preparation	56
	Asphalt Rubber Hot Mix (ARHM) Wet Process	57
	Hot Mix Asphalt Concrete (AC)	62
	Aggregate Base	66
	Profilograph Asphalt Concrete Pavement	67
	Portland Cement Concrete for Street Improvements (General)	68
	Construct Curb	74
	Construct PCC Retaining Curb	74
	Construct Integral Curb and Gutter	74
	Construct PCC Sidewalk	74
	Construct Median Hardscape	75
	Construct PCC Landing and Access Ramp	75
	Construct 4" PCC Driveway	76
	Construct 6" PCC Driveway	76
	Construct 4" AC Driveway	76
	Construct PCC Residential Drive Approach	77
	Construct PCC Commercial Drive Approach	77
	Construct PCC Cross Gutter and Spandral	77
	Construct PCC Steps	77
	Construct PCC Longitudinal Gutter	78
	Construct Parkway Culvert	78
	Construct Residential Curb Drain	78
	Construct Yard Inlet	78
	Construct Retaining Wall	79
	Construct Masonry Slough Wall per SPPWC 622-3	79
	Construct 6" AC Dike	80
	Fence, Wall, and Gate Relocation or Installation (General)	80
	Furnish and Install Chain Link	81
	Furnish and Install Chain Link Fence Gate	81
	Reconstruct Pilaster	81
	Construct Wood Fence	82
	Furnish and Install White Vinyl Fence	82
	Rolled Erosion Control Product (Netting)	82
	Erosion Control Hydroseed	84
	Fiber Roll	88
	Furnish and Install 24" RCP	90
	Trench Excavation, Bedding, and Backfill	91

Section	Title	
	Trench Shoring and Safety	95
	Concrete Drainage Structures	98
	Reconstruct Storm Drain Manhole Shaft	107
	Furnish and Install PVC Drainage Pipe	108
	Adjust Storm Drain and Sewer Manhole Ring and Cover, Sewer Manhole Cover, and Water Valve	108
	Adjust Water Meter Box To Grade	109
	Adjust Electrical Box To Grade	109
	Relocate Sanitary Sewer Cleanout	110
	Remove and Install New Mailbox	110
	Plant Tree per City Landscaping Standard	111
	Traffic Signal Improvements	113
	Traffic Striping, Pavement Markings, and Pavement Markers	141
	Pavement Markers	143
	Traffic and Street Name Signs	144
	Control Density Fill	146
	Subgrade Stabilization Repairs	148
	AC Leveling Course	149
	Crack Seal and Slurry Seal Existing AC Pavement	149
00800	List of Appendices	
	A. Location Map	
	B. . Project Signs	
	C. City Standard Plans	
	D. Caltrans Standard Plans	
	E. Other Agency Standard Plans	
	E1. Standard Plans for Public Works Construction (SPPWC/APWA)	
	E2. Riverside County Flood Control and Water Conservation District (RFC&WCD) Standard Plans	
	F. Certified Payroll Form	
	G. Solid Waste Disposal and Recycling Reports	
	H. Dig Alert Delineation for Underground Service Markings	
	I. Red Imported Fire Ant Cooperative Agreement	
	J. Owner-Operator Listing Statement of Compliance	
	K. Field Exploration	
	L. Mitigation Monitoring and Reporting Plan	

NOTICE INVITING BIDS

NOTICE IS HEREBY GIVEN THAT THE CITY OF MORENO VALLEY, hereinafter referred to as "the City" or "City," will receive at the stated location **prior to** the Bid Deadline established below, sealed Bids for the Contract for construction of the Work generally described as:

PERRIS BOULEVARD WIDENING
from Ironwood Avenue to Manzanita Avenue
PROJECT NO. 801 0024 70 77

Bid Deadline: **April 17, 2014 prior to 10:00 a.m.**

Bid Opening: **April 17, 2014 at 10:15 a.m.**

Place for Receipt of Bids: City of Moreno Valley, Office of the City Clerk
14177 Frederick Street, Moreno Valley, CA 92552

Place for Opening of Bids: City of Moreno Valley, City Hall Training Room (2nd Floor)
14177 Frederick Street, Moreno Valley, CA 92552

Bidding and Contract Documents Available: Bidding Documents (including City Special Provisions and Project Plans, but not including Standard Plans, Standard Specifications, or Reference Specifications) and Reference Documents (Geotechnical Reports) may be obtained as follows:

Delivery: via FedEx only. Address all requests for delivery service to:
City of Moreno Valley, Department of Public Works, Capital Projects Division, 14177 Frederick Street, Moreno Valley, CA 92552

	Bidding & Reference Documents (Available on CD only)
Cost per set:	$10.00
Shipping per set:	$10.00
Total cost per set:	$20.00

In Person: purchase from the cashier in the Finance Department at the Moreno Valley City Hall, 14177 Frederick Street, Moreno Valley, CA 92552

	Bidding & Reference Documents (Available on CD only)
Total cost per set:	$10.00

All fees listed above are non-refundable. Make checks payable to the City of Moreno Valley. Indicate the Project Number on the checks. For additional information regarding the purchase or delivery of Bidding Documents and Reference Documents, please call the Department of Public Works, Capital Projects Division at 951.413.3130.

Deadline for Bidder Requests for Information All RFI's must be in writing. Any RFI received after the date and time specified herein will not be considered.
Date/Time: **April 10, 2014, by 12:00 p.m. sharp**
Attention: Larry Gonzales, Senior Engineer, P.E.
Fax: 951.413.3170; E-mail: TechInfo-CapProj@moval.org

1. **Date of Commencement and Time for Completion**: The Contractor shall complete all preconstruction requirements, ordering of materials, and construction of the Project within the Contract Time of **two hundred fifty (250) Working Days** for the Base Bid Schedule only and up to **three hundred fifteen (315) Working Days** for the Base Bid Schedule plus Alternate Bid Schedules 1 – 6 after the date of commencement specified in the Notice to Proceed to Fulfill Preconstruction Requirements issued by the City. See **Paragraph 5** of the Agreement for details regarding the initial Notice to Proceed to Fulfill Preconstruction Requirements, Notice to Proceed to Pothole Pole Foundation Locations, Notice to Proceed with Order of Materials, and Notice to Proceed with Construction.

2. **Bidder Information and Addenda**: Each Bidder shall register by providing its street address, e-mail, phone and fax to City at the time of pick-up of or request for Bidding Documents ("Registered Bidders); Addenda, if any, shall be issued via fax or e-mail only to Registered Bidders. The City reserves the right to extend the Bid Deadline and Bid Opening by issuing an Addendum to Bidders no later than 72 hours prior to the Bid Deadline.

3. **Bid Forms**: Each Bid shall be submitted on the City's Bidder's Proposal forms. If any Bidder makes any alteration, strike-through or otherwise deviates from any of the pre-printed Bidder's Proposal forms, or makes any qualifications of the Bidder's Proposal forms in separate documents submitted with the Bidder's Proposal, the Bid may be considered non-responsive. All Bidders' Proposals shall be evaluated on the basis of the Engineer's estimate of the quantities of Work to be performed.

4. **Bid Security**: Each Bid shall be accompanied by Bid Security, in the form of cash, a certified check, cashier's check, or Bidder's Bond executed by a California-admitted surety insurer (as defined by California Code of Civil Procedure §§ 995.120 and 995.311) in an amount of not less than **ten percent (10%)** of the amount of the total of the Base Bid price on the base contract, including any Alternate Bid Items. Such Bid Security shall guarantee that the Bidder, if his or her Proposal is accepted, will execute the Agreement, secure and furnish proof of Commercial General Liability, Automobile, and Workers' Compensation Insurance as required by the Contract Documents, furnish a Faithful Performance Bond in the amount of one hundred percent (100%) of the total Contract Price, and furnish a Labor and Materials Payment Bond in the amount of one hundred percent (100%) of the total Contract Price, within ten (10) Working Days after the date of the receipt of the Agreement. Failure to execute and furnish said Contract Documents within said 10 days shall be just cause for the annulment of the award and forfeiture of the Bid Security pursuant to the provisions of Section 20172 of the California Public Contract Code. The City will retain the Bid Security of the first, second, and third lowest responsible Bidders until such time as the Agreement is executed. The Bid Security submitted by all other Bidders will be released within thirty (30) days after the date of the award of the Contract.

5. **Contractors License**: No Bid will be accepted from a Bidder who, at the Bid Deadline, is not fully and properly licensed as a contractor in accordance with Chapter 9 of Division 3 of the California Business and Professions Code (Section 7000 et seq.). At the Bid Deadline, the prime Contractor must hold an active Class "A" contractors license issued by the California Contract State License Board or a combination of Class "C" specialty contractors licenses issued by the California Contract State License Board necessary for the performance of all Work to be performed by the prime Contractor. All Subcontractors shall be properly licensed at the Bid Deadline.

6. **Owner's Rights Reserved**: Within such limits as may be prescribed by law, the City Council of the City of Moreno Valley reserves the right to reject any and all Bids, to accept, reject or waive

any variances or informalities in a Bid or in the bidding, or to accept the Bid or Bids that best serve the interests of the City.

7. **Work Performed by Contractor**: The successful Bidder shall perform, with its own organization, Contract Work amounting to at least 50 percent (50%) of the Contract Price, except that any designated "Specialty Items" may be performed by subcontract and the amount of any such "Specialty Items" may be deducted from the Contract Sum before computing the amount of Work required to be performed by the Contractor. See Section 2-3.2 of the Standard Specifications and City Special Provisions.

8. **Payment of Prevailing Wage Rates**: This Project is subject to the provisions of Labor Code Section 1720 et seq., and the requirements of Title 8 of the California Code of Regulations Section 16000 et seq., which govern the payment of prevailing wages on public works projects. The Director of the Department of Industrial Relations, State of California (DIR) pursuant to the California Labor Code, has determined the general prevailing rates of wages in the locality in which the Work is to be performed. Said rates are on file with the Capital Projects Division of the City of Moreno Valley and copies will be made available to any interested party on request during regular business hours and are also available on the Internet at the California Department of Industrial Relations website: http://www.dir.ca.gov/dlsr/DPreWageDetermination.htm. These rates shall be the minimum wage rates for this project. The Contractor shall post a copy of said rates at the job site throughout the period of work on this project. The Contractor shall see that all employees of both the prime Contractor and subcontractors are being paid rates equal to or greater than the said rates. See **Section 7-2.3** of the **City Special Provisions**.

9. **Substitution of Securities**: Pursuant to California Public Contract Code Section 22300, the Contractor may substitute approved securities for any monies withheld by the City to ensure performance of the Work. At the request and sole expense of the Contractor, securities equivalent to the amount withheld shall be deposited with the City, or with a state or federally chartered bank in California as escrow agent, who shall pay such monies to the Contractor after satisfactory completion of the Contract. Securities eligible for investment under this section shall include those listed in Section 16430 of the Government Code, bank or savings and loan certificates of deposit, interest-bearing demand deposit accounts, and standby letters of credit. The Contractor shall be the beneficial owner of any securities substituted for monies withheld and shall receive any dividends and interest thereon. Alternatively, the Contractor may request that the City, at the expense of the Contractor, make payment of retention earned directly to the escrow agent. Notwithstanding the foregoing, such Contractor shall have thirty (30) Calendar Days following award of the Contract to submit a written request to the City to permit the substitution of securities for retention or payment to an escrow agent; failure to do so shall be deemed a waiver of the right.

10. **City of Moreno Valley Business License**: The Contractor and all Subcontractors shall obtain and keep current a City of Moreno Valley Business License prior to commencement and throughout the duration of the Work.

11. **Withdrawal of Bids**: Bids shall remain open and valid for **sixty (60) days** after the Bid Deadline.

12. **Contract Award/Alternate Bid Items**: Refer to **Paragraph 20** of the Instructions to Bidders, **Award of Contract**.

13. Subcontractors: Each Bidder shall submit, on the Bid Form provided by the City, a list of Subcontractors to be used on this Project as required by the Subletting and Subcontracting Fair Practices Act, California Public Contract Code section 4100 *et seq*.

14. Insurance: All Contractors and Subcontractors must provide the insurance described in **Paragraph 7** of the Agreement.

15. Performance and Payment Bonds: Refer to **Paragraph 22** of the Instructions to Bidders.

16. Technical Information: For technical information relating to the details of this Project and bidding requirements, contact the Capital Projects Division of the City of Moreno Valley Public Works Department at 14177 Frederick Street, Moreno Valley, California 92552, or call or e-mail Larry Gonzales, Project Manager, at 951.413.3130 or TechInfo-CapProj@moval.org.

For: _____ Date: 3/13/14

Ahmad R. Ansari, P.E.
Public Works Director/City Engineer
City of Moreno Valley

INSTRUCTIONS TO BIDDERS

1. **Scope of Project**: The Contractor shall furnish, to the satisfaction of the Engineer, all labor, materials, tools, equipment, and incidentals, unless otherwise specified, to construct and complete the Work in compliance with the Contract Documents.

2. **General**: Information contained in these Instructions to Bidders is supplemental to information contained in the Notice Inviting Bids. The meanings of all capitalized terms not defined herein are defined in the Standard Specifications or the City Special Provisions.

3. **Examination of Site and Bidding Documents**: The Bidder, at its sole cost and expense, is required to examine carefully the Bidding Documents and the Project site to become fully acquainted with the conditions affecting the Work. The failure of a Bidder to receive or examine any of the Bidding Documents or to inspect the site shall not relieve such Bidder from any obligation with respect to the Bid, the Contract, or the Work required under the Contract Documents. The City assumes no responsibility or liability to any Bidder for, nor shall the City be bound by, any understandings, oral representations, or oral agreements of the City's agents, employees, or officers concerning the Contract Documents or the Work made prior to execution of the Contract. By submitting a Bid, Bidder represents: (1) that Bidder has read and understands the Bidding Documents; (2) the Bid is made in compliance with the Bidding Documents and is based upon the labor, materials, equipment, and systems required by the Bidding Documents; (3) that Bidder understands that all labor, materials, equipment, and systems to be furnished for the Work shall be furnished for the prices bid; (4) that it has visited the Project site, familiarized itself with the local conditions under which the Work is to be performed; (5) that it is fully experienced, qualified and competent to perform the Work set forth in the Contract Documents; (6) that it shall not damage or endanger and shall preserve and protect adjacent properties; (7) that it is properly equipped, organized and financed to perform the Work; (8) that it is properly permitted and licensed by the California Contractors State Licensing Board to perform the Work; (9) that it has familiarized itself with all conditions bearing upon transportation, disposal, handling and storage of materials; (10) that it has familiarized itself with the availability of labor, water, electric power, and roads; (11) that it has familiarized itself with uncertainties of weather, or similar physical conditions at the Project site; (12) that it has familiarized itself with the character of equipment and facilities needed preliminary to and during performance of the Work; (13) that it has familiarized itself with the staging and material storage constraints of the Project site and surrounding buildings and will confine its staging and storage operations to approved areas; (14) that it will coordinate its construction activities with the other contractors performing work on the Project site, if any, including, but not limited to, any Separate Contractor retained by the City; and (15) that the Bidder has checked figures set forth in the Bid Schedule and understands that neither the City, nor the Moreno Valley Housing Authority, nor the Moreno Valley Community Services District, nor any officer or employee therefore will be responsible for any misunderstandings, errors, or omissions on the part of the Bidder in submitting its Bid.

4. **Urban Runoff**: The Bidder certifies to the City that he/she has trained his/her employees and Subcontractors, if any, for Urban Runoff management and has included sufficient sums in the Bid Price to cover such costs of said training as stipulated in the most current Regional Water Quality Control Board requirements, including the Municipal Separate Storm Sewer System NPDES Permit. The Contractor is responsible for all clean up and payment of all fines levied as a result of any illegal discharge (as defined in said NPDES permit) occurring as a result of the Contractor's Work and/or operations.

5. **Estimated Quantities**: The estimated quantities set forth in the Bid Schedule are approximate only, and are provided only as a basis for the comparison of Bids. The City does not guarantee, expressly or by implication, that the actual amount of Work will correspond therewith, and reserves the right to increase or decrease the amount of any portion of the Work, or to omit portions of the Work, or delete any Bid Items of Work as may be deemed necessary or advisable by the Engineer. Payment shall be made only for actual quantities of Contract items constructed in accordance with the Contract Documents. See Section 9.3 of the Standard Specifications and City Special Provisions.

6. **Interpretation of Bidding Documents**: Discrepancies in and omissions from the Bidding Documents shall, at once, be brought to the attention of the City. If any Bidder contemplating submitting a Bid for the Project is in doubt as to the true meaning of any part of the Bidding Requirements or Contract Documents, or who finds discrepancies, errors or omissions therein or who finds variances in any of the Bidding Documents with Applicable Law, such Bidder may submit a written request for an interpretation or correction thereof to the City. All Bidders shall submit such written requests to the City on or before the deadline established in the Notice Inviting Bids unless modified by Addendum (i.e., at least **five (5) Working Days** prior to the Bid Deadline, unless modified by Addendum). Any interpretation or correction will be made only by Addenda duly issued by the City, and a copy of such Addenda will be faxed or e-mailed to each Registered Bidder. The City will not be responsible for any other explanations or interpretations. No oral agreement or conversation with any officers, employees, or agents of the City, either before or after execution of the Contract, shall affect or modify any of the terms of obligations contained in any of the Contract Documents.

7. **Addenda**: Before the Bid Deadline, the City may modify the Work, the Bidding Documents, or any portion(s) thereof by the issuance of written Addenda disseminated to all Registered Bidders. All Addenda shall be acknowledged in the Bidder's Proposal and shall become a part of the Contract Documents. The cost of performing Work described in the Addenda shall be included in the Bid. If any Addenda have been issued by the City but are not acknowledged by the Bidder in the Bidder's Proposal, the Bid may be rejected as non-responsive. It is the Bidder's responsibility to confirm the issuance of any and all Addenda prior to Bid submittal by calling the City at 951.413.3130.

8. **Bid Forms and Submission of Bid**: Bids shall be submitted on the City's Bidder's Proposal forms, to the City Clerk of the City of Moreno Valley. Bids submitted on any other forms will be rejected as non-responsive. All information required in the Bidder's Proposal forms must be completely and accurately provided. All blanks must be legibly executed in a non-erasable medium. If the Bidder makes any change on the Bidder's Proposal forms prior to submission of the Bid, the Bidder is to strike through the existing writing, add the revision, and initial each revision.

The complete Bid shall be enclosed in a sealed envelope; addressed to City Clerk, City of Moreno Valley, 14177 Frederick Street, P.O. Box 88005, Moreno Valley, California 92552-0805; with the Bidder's company name and address on the upper left corner; and with the following written on the front of the envelope: the Project number, name of Project, hour and date of Bid Opening as specified in Notice Inviting Bids, and the words "SEALED BID, DO NOT OPEN WITH REGULAR MAIL."

Bids not received by the City Clerk of the City of Moreno Valley prior to the time and date set forth in the Notice Inviting Bids shall be declared late and returned unopened to the Bidder. The Bidder is solely responsible for the timely delivery of the Bid to the City.

9. **Bid Schedule**: The Bidder shall set forth for each Bid Item, in clearly legible figures, a unit price and a total price in the respective spaces provided for this purpose on the Bidder's Proposal form. In the case of unit basis items, the amount set forth under the "Total Price" column shall be the product of the unit price multiplied by the estimated quantity for the item.

In case of discrepancy between the unit price and the total set forth for the item, the unit price shall prevail, except however, that if the amount set forth as a unit price is ambiguous, unintelligible or uncertain for any reason, or if it is omitted, or is the same amount as the entry in the "Total Price" column, or in the case of lump sum items is not the same amount as the entry in the "Total Price" column, then the amount set forth in the "Total Price" column for the item shall prevail in accordance with the following:

A. As to the lump sum items, the amount set forth in the "Total Price" column shall be the same amount in the unit price column, otherwise the amount set forth in the "Total Price" column shall prevail. Lump sum items are considered to be a unit of one.

B. As to unit basis items, the amount set forth in the "Total Price" column shall be divided by the estimated quantity for the item and the price thus obtained shall be the unit price.

The Bidder shall set forth in clearly legible figures the "Total Base Bid" in the space provided at the bottom of the Bid Schedule. In case of a discrepancy between the actual sum of the "Total Price" column and the number written by Bidder as the "Total Base Bid," the actual sum of the "Total Price" column shall prevail over the number written by Bidder as the "Total Base Bid."

10. **Signature**: The Bid must be signed where so indicated by the person or persons duly authorized to sign on behalf of the Bidder and state the legal name of the Bidder and the nature of the legal form of business of Bidder. By signing the Bid, the person signing represents that he or she has legal authority to bind the Bidder to the Contract for the Work. Bids without valid required signatures shall be considered non-responsive. If a Bidder makes a change to the Bidder's Proposal forms prior to submission of the Bid, the Bidder shall strike through the existing script, add the revisions, and initial the changes. If the Bid is submitted by an individual, the Bid shall be signed by that individual and his full name and post office address shall be given. If the Bid submitted by a partnership, the Bid shall include the partnership name and the name and address of each partner, and shall be signed by one of the general partners. If the Bid is submitted by a corporation, two (2) corporate officers having authority from the corporation shall sign, unless the corporation has a corporate resolution stating that one person is authorized to sign on behalf of all officers, and such resolution is attached to the Bid immediately following the notary certificates. The corporate seal may be affixed to the signature page.

11. **Withdrawal of Bidder's Proposals**: Any Bid may be withdrawn prior to the Bid Deadline set forth in the Notice Inviting Bids for submission of Bids, provided that a request in writing, executed by the Bidder or his or her duly authorized representative, for the withdrawal of such Bid is filed with the City Clerk prior to such time and date. The withdrawal of a Bid shall not in itself prejudice the right of a Bidder to submit a new Bid prior to the Bid Deadline.

No bid may be withdrawn or changed after the Bid deadline, except as otherwise provided by law. The lowest Bidder may only request relief of its Bid in accordance with Public Contract Code Section 5100 et seq. Each Bidder agrees by submitting a Bid that its Bid shall remain open, is irrevocable,

and may not be modified, withdrawn, or cancelled for a period of at least **sixty (60) Calendar Days** after Bid Deadline.

12. **Bid Security**: As set forth in the Notice Inviting Bids, Each Bid shall be accompanied by cash, a certified check or cashier's check payable to the City of Moreno Valley, or Bidder's Bond executed by the Bidder as principal and a California-admitted surety insurer (as defined by California Code of Civil Procedure §§ 995.120 and 995.311) in an amount of not less than **ten percent (10%)** of the amount of the total of the Base Bid price on the base contract, including any Alternate Bid Items ("Bid Security"). Pursuant to California Public Contract Code Section 20170 & 20171, no Bid shall be considered unless such Bid Security is enclosed therewith. If the Bidder elects to furnish a Bidder's Bond as his or her Bid security, the Bidder shall use the City's form included in the Bidding Documents. A notary certificate for the Bidder's signature shall be attached. The attorney-in-fact for a corporate surety must sign the bond, such signature shall be notarized, and a certified and notarized Power of Attorney duly authorizing the attorney-in-fact to act for the surety shall be submitted with the bond. The bond shall include the address at which the principal (Bidder) and surety may be served with notices, papers and other documents. If any of these items are not submitted with the Bid, the Bid shall be considered non-responsive and will be rejected.

In the event that the successful Bidder withdraws its Bid prior to the expiration of **sixty (60) Calendar Days** after the Bid Deadline, or attempts to withdraw its Bid when the requirements of Public Contract Code § 5101 *et seq.* are not met, or refuses or fails to execute the Contract and provide the required bonds and insurance within **ten (10) Working Days** after award of the Contract, the Bid Security shall be retained by the City. In such event, the City may award the Contract for the Work to a responsible Bidder submitting the next lowest responsive Bid or may call for new Bids at the City's sole discretion. Pursuant to Public Contract Code Section 20174, if the Contract is awarded to the next lowest responsible Bidder, the defaulted Bidder's Bid Security shall be used to cover the difference between the lowest Bid Price and the second lowest Bid Price, and any surplus will be returned to the defaulted Bidder or surety.

13. **Contractor's Statement**: Each Bidder shall submit with its Bid, a Contractor's Statement (which is included within the Bidder's Proposal forms) completed by Bidder. The Contractor's Statements shall not be public records. All information required by the Contractor's Statement shall be completely and fully provided. Any Bid not accompanied by a Contractor's Statement completed with all information required and bearing the signature of the Bidder's duly authorized representative under penalty of perjury may render the Bid non-responsive and rejected. If the City determines that any information provided by a Bidder in the Contractor's Statement is false or misleading, or is so incomplete as to be false or misleading, the City may reject the Bid submitted by such Bidder as being non-responsive. Although the City will be reviewing qualifications, the City shall not apply a relative superiority analysis in making award of the Contract to the lowest responsive responsible Bidder.

14. **Subcontractors**:

14.1. **Subcontractor List.** Each Bidder shall submit a list of proposed Subcontractors in accordance with the Subletting and Subcontracting Fair Practices Act, Public Contract Code Section 4100 *et seq.* The City has furnished a form for this purpose. If additive Alternate Bid Items are included in the Bidding Documents, Bidder shall identify Subcontractors performing additive Alternate Bid Items when such Work or combination of base Contract Work and alternate work exceeds one-half of one percent of the total Bid Price. The City may require the three (3) lowest Bidders to submit other information pertinent to the proposed Subcontractor's quality, fitness, capacity, and experience to satisfactorily perform the Work. Failure to timely submit such additional

Subcontractor information shall result in the Bid being deemed non-responsive and the Bid will be rejected by the City.

14.2. **Work of Subcontractors.** The organization or arrangements of the Specifications and Plans shall not limit the extent of the Work of the Contract Documents. Accordingly, all Bidders are encouraged to disseminate all of the Specifications, Drawings, and other Contract Documents to all persons or entities submitting sub-bids to the Bidder. The omission of any portion or item of Work from the Bid or from sub-bids that is reasonably inferable from the Contract Documents is not a basis for adjustment of the Contract Price or the Contract Time.

14.3. **Bidder-Performed Work.** After the Bid Deadline, the City may require the three (3) lowest Bidders to submit information about Bidder-performed Work including, but not limited to, the dollar value or percentage value of Work to be performed by Bidder in conformity with the Contract Documents. See Section 2-3.2 of the Standard Specifications and City Special Provisions regarding requirements for Contractor-performed Work.

14.4. **Ineligible Subcontractors.** The successful Bidder is prohibited from performing Work on the Project with any Subcontractor who is ineligible to perform work on a public works project pursuant to Sections 1777.1 or 1777.7 of the California Labor Code. By submitting a Bid, each Bidder certifies that it has investigated the eligibility of each and every listed Subcontractor and has determined that none is ineligible to perform Work pursuant to the Labor Code.

15. **Non-Collusion Affidavit**: The Contractor shall sign the Non-Collusion Affidavit in the form contained in the Bidding Documents, under penalty of perjury, certifying that the Bid is not the result of and has not been influenced by collusion. Any Bid made without such affidavit, or believed to be made in violation thereof, shall be deemed non-responsive.

16. **Disqualification of Bidders**:

16.1. **Debarred Contractors.** No Bid will be accepted from a Bidder who is prohibited from performing work on a public works project pursuant to Sections 1777.1 or 1777.7 of the California Labor Code.

16.2. **Interest in More Than One Bid.** More than one Bid from an individual, firm, partnership, corporation, or an association under the same or different name will not be considered; however, a person, firm or corporation that has submitted a sub-bid to a Bidder or that has quoted prices of materials to a Bidder, is not thereby disqualified from submitting a sub-bid or quoting prices to other Bidders or making a Bid as the prime contractor. Reasonable grounds for believing that any Bidder has an interest in more than one Bid as a Bidder will cause the rejection of all Bids in which such Bidder is interested.

16.3. **Improperly Licensed.** No Bid will be accepted from a Bidder who, at the Bid Deadline, is not fully and properly licensed as a contractor in accordance with Chapter 9 of Division 3 of the California Business and Professions Code (Section 7000 et seq.). See the Notice Inviting Bids for identification of the license(s) required for this Project.

17. **Evaluation of Bids**:

17.1. **Responsive Bid.** A responsive Bid is a Bid that conforms, in all material respects, to these Instructions to Bidders. Non-responsive Bids will be rejected.

17.2. **Responsible Bidder.** A responsible Bidder means a Bidder who has demonstrated the attributes of trustworthiness, quality, fitness, capacity, and experience to satisfactorily perform fully the requirements of the Contract Documents and the moral and business integrity and reliability that will assure good faith performance in the sole discretion of the City. The City's determination of a Bidder's responsibility or nonresponsibility shall be based on the fitness and capacity of the Bidder to satisfactorily perform the obligations of the Contract, whether or not the Bidder is qualified to perform those obligations, whether or not the Bidder is trustworthy, and such other bases as may be relevant. The City may consider, among other things: (1) any act or omission or pattern or practice of acts or omissions that negatively reflect on the Bidder's quality, fitness or capacity to perform; (2) any act or omission of Bidder that indicates a lack of integrity or honesty; (3) the making of a false claim against the City or any other public entity or engaging in collusion; (4) the Bidder's financial capability to perform; (5) the Bidder's experience with its sureties and insurance companies; (6) the Bidder's ability to perform on time and on budget, either in the present or as performed in the past; (7) whether or not Bidder has performed satisfactorily in the past on its contracts with the City or any other public entity, including, but not limited to, whether or not Bidder has been in default under a contract with the City or any other public entity; (8) the Bidder's safety record; (9) the Bidder's history of claims, litigation, and termination or disqualification on public projects; (10) Bidder's contract management skills, including, but not limited to, the use of scheduling tools, submission of schedules, compliance with prevailing wage rates, and certification of accurate payroll documents; and (11) whether or not Bidder is currently or was previously debarred by any public agency.

18. **Reservation of Rights**: The City reserves the right, in its sole discretion, to: judge the Bidder's representations as stated in the Bidder's Proposal forms, including the Contractor's Statement, and any post-Bid information to determine whether or not Bidder is qualified to perform the Work; be the sole judge regarding the suitability of the products, services or supplies offered; to not purchase all items or the full quantity of each item listed in the Bidding Documents; reject any or all Bids; modify, cancel or withdraw the Notice Inviting Bids; issue a new Notice Inviting Bids; suspend or abandon the Project; appoint evaluation committees to review bids; and seek the assistance of outside technical experts in Bid evaluation; waive deficiencies, informalities and minor irregularities in any Bid or in the bidding process; require a Bidder to provide a guarantee (or guarantees) of the Contract by a third party; not issue a Notice to Proceed after execution of the Contract. In submitting a Bid in response to the Notice Inviting Bids, the Bidder is specifically acknowledging the City holds these rights. The Notice Inviting Bids does not commit the City to enter into a Contract, to reject, in its sole discretion, all Bids, nor does it obligate the City to pay for any costs incurred in preparation and submission of a Bid or in anticipation of a contract. By submitting a Bid, the Bidder disclaims any right to be paid for such costs.

19. **Rejection of Bidder's Proposals**: Any Bid containing information which is subsequently proven false or improperly signed shall be considered non-responsive and shall be rejected by the City. A Bid **shall** be rejected as non-responsive:

A. If the Bid shows any alterations of form or material additions not called for.

B. If the Bid contains additional or alternate Bid Items not called for.

C. If the Bidder adds any provisions reserving its rights to accept or reject any award of Contract.

D. If the Bid Bond/Security does not accompany the Bid.

E. If the Bid fails to provide required information except as allowed by law.

F. If the Bid fails to indicate that Work valued at least fifty percent (50%) of Contract Price (except Specialty Items) will be performed by the Bidder's own forces, in accordance with Section 2-3.2 of the City Special Provisions.

G. If the Bid is transferred to another Bidder.

H. If the Bid is received after the designated deadline.

I. If the Bid is oral, telephoned, faxed, e-mailed, or telegrammed.

J. If the Bid does not contain a properly signed Noncollusion Affidavit.

K. If the Bidder has been debarred pursuant to California Labor Code Sections 1777.1 or 1777.7 (see Paragraph 16.1 above).

A Bid **may** be rejected as non-responsive if it contains irregularities of any kind; however, the City reserves the right to waive irregularities to the extent permitted by law, as well as to reject any and all Bids. Bids may be considered irregular and may be rejected for reasons that include, but are not limited to, the following:

A. If there are material qualifications, conditions, or irregularities of any kind which may make the Bid incomplete, indefinite, or ambiguous.

B. If the Bid Price or unit prices provided by Bidder are obviously unbalanced or are excessive or may materially affect the final cost of the Work.

C. If Bidder has been delinquent or unfaithful in the performance of any former contract with the City.

D. If the City determines that any information provided by a Bidder is false or misleading, or is so incomplete as to be false or misleading.

20. **Award of Contract**: The lowest responsible Bidder will be determined by comparing the total Bid Price of all Base Bid Items plus Alternate Bid Items, using the Engineer's estimate of quantities for the Work as set forth in the Bidder's Proposal. The City reserves the right to select any, all, or none of the Alternate Bid Items at the time of award of the Contract. In the event that any or all of the Alternate Bid Items are not awarded as part of the Contract, the City reserves the right to add any or all of the Alternate Bid Items by Change Order or Construction Change Directive at the prices set forth in the Bid.

The award of the Contract, if made, will be within sixty (60) Calendar Days after Bid Opening. In the event award is not made within a sixty (60) day period, the selected Contractor, if any, may submit to the City claim(s) for additional costs incurred between the end of said sixty (60) day period and date of actual award. All reasonable claims will be considered, and any justifiable costs shall be added to the Contract pursuant to a Change Order.

21. **Execution of Contract**: The Agreement shall be signed by the successful Bidder in duplicate counterpart and returned, together with the required bonds and insurance certificate(s), within ten (10) Working Days after the date the Agreement is awarded to the successful Bidder by the City. The Contract shall not be binding upon the City until same has been completely executed by the Contractor and the City.

22. **Bonds and Insurance**: The successful Bidder shall furnish a Performance Bond and a Labor and Materials Payment Bond, each in the penal amount of 100% of the Contract Price. Bond forms for execution will be provided by the City when the Contract is tendered to the successful Bidder. Bonds may be secured through the Bidder's usual sources. The cost of furnishing the bonds shall be included in the Bid. Bonds issued by a California-admitted surety insurer listed on Treasury Circular 570 shall be deemed accepted unless specifically rejected by the City. Bonds issued by sureties not listed in Treasury Circular 570 must be accompanied by all documents enumerated in California Code of Civil Procedure Section 995.660. The bonds are subject to the requirements of **Paragraph 8** of the Agreement. The Bidder selected for award of the Contract will be required to furnish the City with a certificate of liability insurance coverage, an insurance endorsement, and workers' compensation certification in the coverage amounts specified in **Paragraph 7** of the Agreement. The successful Bidder shall deliver the signed Agreement, bonds, and insurance to the City within **ten (10) Working Days** after the Contract is awarded to the successful Bidder.

23. **Permits and Fees**: Refer to Section 7-5 of the City Special Provisions.

END OF DOCUMENT

BIDDER'S PROPOSAL

PROJECT NO. 801 0024 70 77
PERRIS BOULEVARD WIDENING
from Ironwood Avenue to Manzanita Avenue

TO: THE HONORABLE MAYOR AND CITY COUNCIL of the City of Moreno Valley, California
c/o City Clerk, City of Moreno Valley, 14177 Frederick Street, Moreno Valley, CA 92553

FROM:_____
(Name of Bidder as listed on Contractors State License)

_____
(Address)

_____
(City, State, ZIP Code)

_____
(Email Address)

1. ADDENDA: The Bidder includes in the Base Bid and any Alternate Bid Price, the Work specified in any and all Addenda to the Contract Documents issued by the Owner during the bidding period and acknowledges having received a total number of _____ Addenda (if none, so state), and accepts all conditions contained therein.

2. CERTIFICATION OF INSPECTION OF THE SITE AND CONTRACT DOCUMENTS. By signing below, Bidder certifies that it: has carefully examined the location of the proposed Work, is fully familiar with all Contract Documents, including the City Special Provisions, Plans, and Addenda, Plans, and that said Contract Documents contain sufficient detail regarding the Work to be performed; has notified Owner of any errors or omissions in the Contract Documents and unusual site conditions; has carefully checked all words, prices, and statements in this Bidder's Proposal; and has visited the Project site and conducted such other field investigations which are prudent and reasonable in preparing the Bid. Bidder agrees that neither the City of Moreno Valley, nor the Moreno Valley Housing Authority, nor the Moreno Valley Community Services District, nor any officer or employee therefore will be responsible for any misunderstandings, errors, or omissions on the part of the undersigned in submitting this Bid.

3. BIDDER'S REPRESENTATIONS REGARDING INSURANCE AND BONDS. This Bid is made with the full knowledge of the kind, quantity, and quality of the materials and Work required and, if it is accepted by the City, the Bidder shall enter into a Contract and furnish the bonds, insurance, and other documents as required by the Contract Documents within ten (10) Working Days after award of the Contract. The Bidder agrees that failure to execute and return the Agreement or the required faithful performance bond, labor and materials payment bond, and insurance certificates to the City within said ten (10) Working Days shall be sufficient cause for the rescission of the award and forfeiture of the Bid Security.

4. TIME FOR COMPLETION. The Bidder agrees that if awarded the Contract, it shall complete all preconstruction requirements, ordering of materials, and construction of the Project within the Contract Time established in **Paragraph 5** of the Agreement and within the duration(s) established

to Fulfill Preconstruction Requirements, to Pothole Pole Foundation Locations, to Order Materials, and to Proceed with Construction.

5. NON-COLLUSION AFFIDAVIT.

STATE OF CALIFORNIA)
COUNTY OF _____) SS.

_____, being first duly sworn deposes
(Insert name)
and says that he or she is _____
(Insert "Sole Owner," "Partner," "President," "Secretary," or other proper title)
of _____
(Insert Bidder name)
the party who submits herewith a Bid to the City; that the Bid is not made in the interest of, or on behalf of, any undisclosed person, partnership, company, association, organization, or corporation; that the Bid is genuine and not collusive or sham; that the Bidder has not directly or indirectly induced or solicited any other Bidder to put in a false or sham Bid, and has not directly or indirectly colluded, conspired, connived, or agreed with any Bidder or anyone else to put in a sham Bid, or that anyone shall refrain from bidding; that the Bidder has not in any manner, directly or indirectly sought by agreement, communication, or conference with anyone to fix the Bid price of the Bidder or any other Bidder, or to fix any overhead, profit, or cost element of the Bid price, or of that of any other Bidder, or to secure any advantage against the City of anyone interested in the proposed Contract; that all statements contained in the Bid are true; and, further, that the Bidder has not, directly or indirectly, submitted his or her Bid Price or any breakdown thereof, or the contents thereof, or divulged information or data relative thereto, or paid, and will not pay, any fee to any corporation, partnership, company associations, organization, bid depository, or to any member or agent thereof to effectuate a collusive or sham Bid.

Signed: _____ Date: _____

Title: _____

If the Bidder fails to complete and properly sign this affidavit, the Bid will be considered non-responsive and will be rejected.

6. BIDDER'S BUSINESS ORGANIZATION.

The Bidder is a(n): _____ (individual, partnership, or corporation)

If an individual, state the individual's name. If a partnership, state the names of all general and limited partners composing the firm. If a corporation, state the names of the officers. If the Bidder fails to provide the requested information, the Bid will be considered non-responsive and will be rejected.

_____ _____

_____ _____

_____ _____

_____ _____

If a corporation, the corporation is organized under the laws of the State of _____, and is authorized to transact business in the State of California.

7. CONTRACTORS LICENSE CERTIFICATION. The undersigned certifies that Contractors License No. _____ issued by the California Contractors State License Board ("CSLB") to the undersigned on _____ (date), is current, valid, has not been revoked, suspended or cancelled, and is appropriate to the Work to be undertaken. The name on the California Contractors License must be the same as the Bidder's name.

Contractors License Classification(s): _____

Check one _____ Individual _____ Corporation _____ Partnership

_____ RME _____ RMO _____ Joint Venture

Expiration Date: _____

Name of Qualifying Individual: _____

8. SIGNATURE AND SIGNATURE AUTHORIZATION. The undersigned certifies that he/she/they is/are authorized to sign this Bid and any subsequent Contract on behalf of the Bidder. Bids without valid required signature(s) will be considered non-responsive. Signature(s) must be accompanied by a completed notary certificate of acknowledgement attached hereto. Note the description of the document on the notary certificate. A general partner must sign on behalf of a partnership. **Two (2)** corporate officers must sign on behalf of a corporation unless the corporation has a corporate resolution that allows one person to sign on behalf of the corporation; if applicable, said resolution must be attached hereto. The corporate seal may be affixed hereto.

Company/Contractor Legal Name	Federal Tax ID Number
Signature	Signature
Name (print/type)	Name (print/type)
Title (print/type)	Title (print/type)
Phone Number and Fax Number	E-Mail Address
Date	

CALIFORNIA ALL-PURPOSE CERTIFICATE OF ACKNOWLEDGMENT

SAMPLE

State of California

County of _____

On _____ before me, _____,
(Here insert name and title of the officer)

personally appeared _____,

who proved to me on the basis of satisfactory evidence to be the person(s) whose name(s) is/are subscribed to the within instrument and acknowledgement to me that he/she they executed the same in his/her/their authorized capacity(ies), and that by his/her/their signature(s) on the instrument the person(s), or the entity upon behalf of which the person(s) acted, executed the instrument.

I certify under PENALTY OF PERJURY under the laws of the State of California that the foregoing paragraph is true and correct.

WITNESS my hand and official seal.

_____ (Notary Seal)
Signature of Notary Public

ADDITIONAL OPTIONAL INFORMATION

DESCRIPTION OF THE ATTACHED DOCUMENT

BIDDER'S PROPOSAL
(Title or description of attached document)

_____
(Title or description of attached document continued)

Number of Pages _____

Document Date _____

_____
Additional Information

CAPACITY CLAIMED BY THE SIGNER

- ☐ Individual(s)
- ☐ Corporate Officer

_____
(Title)

- ☐ Partner (s)
- ☐ Attorney-in-Fact
- ☐ Other _____

INSTRUCTIONS FOR COMPLETING THIS FORM

Any acknowledgment completed in California must contain verbiage exactly as appears above in the notary section or a separate acknowledgment form must be property completed and attached to that document. The only exception is if a document is recorded outside of California. In such instances, any alternative acknowledgment verbiage as may be printed on such a document so long as the verbiage does not require the notary to do something that is illegal for a notary in California (i.e. certifying the authorized capacity of the signer). Please check the document carefully for proper notarial wording and attach this form if required.

- State and County information must be the State and County where the document signer(s) personally appeared before the notary public for acknowledgment.
- Date of notarization must be the date that the signer(s) personally appeared which must also be the same date the acknowledgment is completed.
- The notary public must print his or her name as it appears within his or her commission followed by a comma and then your title (notary public).
- Print the name(s) of document signer(s) who personally appear at the time of notarization.
- Indicate the correct singular or plural forms by crossing off incorrect forms (i.e. ~~he~~/she/~~they~~, is/~~are~~) or circling the correct forms. Failure to correctly indicate this information may lead to rejection of document recording.
- The notary seal impression must be clear and photographically reproducible. Impression must not cover text or lines. If seal impression smudges, re-seal if a sufficient area permits, otherwise complete a different acknowledgment form.
- Signature of the notary public must match the signature on file with the office of the county clerk.
- Additional information is not required but could help to ensure this acknowledgment is not misused or attached to a different document.
- Indicate title or type of attached document, number of pages and date.
- Indicate the capacity claimed by the signer. If the claimed capacity is a corporate officer, indicate the title (i.e. CEO, CFO, Secretary).
- Securely attach this document to the signed document.

BIDDER'S PROPOSAL – BID SCHEDULE

PROJECT NO. 801 0024 70 77
PERRIS BOULEVARD WIDENING
from Ironwood Avenue to Manzanita Avenue

NAME OF BIDDER: _____

BASE BID ITEMS AS FOLLOWS:

ITEM NO.	CODE	DESCRIPTION OF ITEMS	ESTIMATED QUANTITY		UNIT PRICE (FIGURES)	TOTAL PRICE (FIGURES)
1.	S	Project Identification Sign	2	EA		
2.	S	Project Completion Sign	2	EA		
3.		Stormwater and Non-Stormwater Pollution Control	%	LS		
4.		Non-Stormwater Discharge or Dewatering	%	LS		
5.	S	Environmental Mitigation per Special Provisions	1	LS		
6.		Traffic Control	%	LS		
7.		Temporary Video Detection System	%	LS		
8.		Clearing, Grubbing, and Removals	%	LS		
9.		Adjust Existing Street Survey Monument	6	EA		
10.		AC Pavement Removal	20,249	SY		
11.	F	Unclassified Excavation	13,405	CY		
12.		Asphalt Rubber Hot Mix (ARHM) Wet Process	2,989	TN		
13.		Hot Mix Asphalt Concrete (AC)	7,409	TN		
14.		Aggregate Base	16,319	TN		
15.	S	Profilograph Asphalt Concrete Pavement	1	LS		

BIDDER'S PROPOSAL – BID SCHEDULE

PROJECT NO. 801 0024 70 77
PERRIS BOULEVARD WIDENING
from Ironwood Avenue to Manzanita Avenue

NAME OF BIDDER: _____

BASE BID ITEMS AS FOLLOWS:

ITEM NO.	CODE	DESCRIPTION OF ITEMS	ESTIMATED QUANTITY		UNIT PRICE (FIGURES)	TOTAL PRICE (FIGURES)
16.		Construct Type 6A Curb	140	LF		
17.		Construct Type 8A Curb	4,169	LF		
18.		Construct PCC Retaining Curb	83	LF		
19.		Construct Type 6 Integral Curb and Gutter	331	LF		
20.		Construct Type 8 Integral Curb and Gutter	6,518	LF		
21.		Construct PCC Sidewalk	43,400	SF		
22.		Construct PCC Landing and Access Ramp (Type I)	14	EA		
23.		Construct PCC Landing and Access Ramp (Type II)	6	EA		
24.		Remove and Reconstruct PCC Landing and Access Ramp (Type I)	3	EA		
25.		Remove and Reconstruct PCC Landing and Access Ramp (Type II)	2	EA		
26.		Construct 4" PCC Driveway	8,610	SF		
27.		Construct 6" PCC Driveway	2,380	SF		
28.		Construct 4" AC Driveway	5,085	SF		
29.		Construct PCC Residential Drive Approach	4,400	SF		
30.		Construct PCC Commercial Drive Approach	2,590	SF		

BIDDER'S PROPOSAL – BID SCHEDULE

PROJECT NO. 801 0024 70 77
PERRIS BOULEVARD WIDENING
from Ironwood Avenue to Manzanita Avenue

NAME OF BIDDER: _____

BASE BID ITEMS AS FOLLOWS:

ITEM NO.	CODE	DESCRIPTION OF ITEMS	ESTIMATED QUANTITY		UNIT PRICE (FIGURES)	TOTAL PRICE (FIGURES)
31.		Construct PCC Cross Gutter and Spandrel	11,120	SF		
32.		Construct PCC Steps	14	CY		
33.		Construct PCC Longitudinal Gutter	50	LF		
34.		Construct Parkway Culvert	2	EA		
35.		Construct Residential Curb Drain	26	LF		
36.		Construct Yard Inlet	2	EA		
37.		Construct Type 1 Retaining Wall per SPPWC 610-3	1,745	SF		
38.		Construct Type 6 Retaining Wall per SPPWC 615-4	1,030	SF		
39.		Construct Masonry Retaining Wall per SPPWC 618-3	1,110	SF		
40.		Construct Masonry Slough Wall per SPPWC 622-3	70	LF		
41.		Construct 6" AC Dike	170	LF		
42.		Furnish and Install Chain Link Fence per City Std. Plan No. 604A	2,070	LF		
43.		Furnish and Install Chain Link Fence per SPPWC 621-2	520	LF		
44.		Furnish and Install Chain Link Fence Drive Gate	6	EA		

BIDDER'S PROPOSAL – BID SCHEDULE

PROJECT NO. 801 0024 70 77
PERRIS BOULEVARD WIDENING
from Ironwood Avenue to Manzanita Avenue

NAME OF BIDDER: _____

BASE BID ITEMS AS FOLLOWS:

ITEM NO.	CODE	DESCRIPTION OF ITEMS	ESTIMATED QUANTITY		UNIT PRICE (FIGURES)	TOTAL PRICE (FIGURES)
45.		Furnish and Install Chain Link Fence Sliding Gate	1	EA		
46.		Furnish and Install Chain Link Fence Walk Gate	1	EA		
47.		Reconstruct Pilaster (11730 Perris Blvd)	3	EA		
48.		Reconstruct Pilaster (11725 Perris Blvd)	5	EA		
49.		Construct Wood Fence	30	LF		
50.		Furnish and Install White Vinyl Fence	280	LF		
51.		Rolled Erosion Control Product (Netting)	11,900	SF		
52.		Erosion Control Hydroseed (Type B)	41,700	SF		
53.		Fiber Roll	1,317	LF		
54.		Furnish and Install 24" RCP	929	LF		
55.		Trench Shoring and Safety	%	LS		
56.		Construct Catch Basin No. 4 with Local Depression (W=6.4')	1	EA		
57.		Construct Catch Basin No. 4 with Local Depression (W=13.3')	1	EA		
58.		Construct Catch Basin No. 1 with Local Depression (W=14')	2	EA		

BIDDER'S PROPOSAL – BID SCHEDULE

PROJECT NO. 801 0024 70 77
PERRIS BOULEVARD WIDENING
from Ironwood Avenue to Manzanita Avenue

NAME OF BIDDER: _____

BASE BID ITEMS AS FOLLOWS:

ITEM NO.	CODE	DESCRIPTION OF ITEMS	ESTIMATED QUANTITY		UNIT PRICE (FIGURES)	TOTAL PRICE (FIGURES)
59.		Construct Catch Basin No. 1 with Local Depression (W=21')	1	EA		
60.		Construct Manhole No. 1	3	EA		
61.		Construct Concrete Collar	1	EA		
62.		Construct Junction Structure No. 4	1	EA		
63.		Construct Transition Structure No. 3	3	EA		
64.		Construct Concrete Blanket	50	LF		
65.		Cap Existing Drainage Inlet	2	EA		
66.		Reconstruct Storm Drain Manhole Shaft	1	EA		
67.		Furnish and Install PVC Drainage Pipe	22	LF		
68.		Adjust Manhole to Grade	14	EA		
69.		Adjust Water Valve to Grade	18	EA		
70.		Adjust Water Meter Box to Grade	13	EA		
71.		Adjust Electrical Box to Grade	1	EA		
72.		Relocate Sanitary Sewer Cleanout	1	EA		
73.		Remove and Install New Mailbox	20	EA		

BIDDER'S PROPOSAL – BID SCHEDULE

PROJECT NO. 801 0024 70 77
PERRIS BOULEVARD WIDENING
from Ironwood Avenue to Manzanita Avenue

NAME OF BIDDER: _____

BASE BID ITEMS AS FOLLOWS:

ITEM NO.	CODE	DESCRIPTION OF ITEMS	ESTIMATED QUANTITY		UNIT PRICE (FIGURES)	TOTAL PRICE (FIGURES)
74.		Plant Street Tree per City Landscaping Standard	4	EA		
75.		Traffic Signal Modification at Perris Blvd and Kalmia Ave	%	LS		
76.		New Traffic Signal Installation at Perris Blvd and Pico Vista Way	%	LS		
77.		Traffic Signal Detector Loop	48	EA		
78.	S	Traffic Striping, Pavement Markings, and Pavement Markers	%	LS		
79.	S	New Roadside Sign	34	EA		
80.		Relocate Roadside Sign	20	EA		
81.		Control Density Fill	21	CY		
82.		Subgrade Stabilization Repairs	20	CY		
83.		AC Leveling Course	100	TN		
TOTAL BASE BID PRICE (Based on estimated quantities of items 1 through 83)						**$**

Note: Estimated quantities are for the purpose of Bid comparison only; payments will be made on the basis of actual measurement of Work completed, except for lump sum (LS) and final pay (F) quantities. (S) denotes a specialty item. The Bid Price shall include, but not be limited to, sales tax and all other applicable taxes and fees.

BIDDER'S PROPOSAL – BID SCHEDULE

PROJECT NO. 801 0024 70 77
PERRIS BOULEVARD WIDENING
from Ironwood Avenue to Manzanita Avenue

NAME OF BIDDER: _____

ALTERNATE NO. 1 (PERRIS FROM IRONWOOD TO SOUTH OF KALMIA – GRIND AND OVERLAY) BID ITEMS AS FOLLOWS:

ITEM NO.	CODE	DESCRIPTION OF ITEMS	ESTIMATED QUANTITY		UNIT PRICE (FIGURES)	TOTAL PRICE (FIGURES)
84.		Traffic Control	%	LS		
85.		Temporary Video Detection System	%	LS		
86.		Adjust Existing Street Survey Monument	1	EA		
87.		Cold Mill Existing AC Depth 2" per Plans	1,460	SF		
88.		Cold Mill Existing AC Variable Depth (0" to 2") per Plans	21,092	SF		
89.		Crack Seal Existing AC Pavement	122,670	SF		
90.		Asphalt Rubber Hot Mix (ARHM) Wet Process	1,725	TN		
91.		Adjust Manhole to Grade	15	EA		
92.		Adjust Water Valve to Grade	7	EA		
93.		Traffic Signal Detector Loop	10	EA		
TOTAL ALTERNATE NO. 1 BID PRICE (Based on estimated quantities of items 84 through 93)						**$**

Note: Estimated quantities are for the purpose of Bid comparison only; payments will be made on the basis of actual measurement of Work completed, except for lump sum (LS) and final pay (F) quantities. (S) denotes a specialty item. The Bid Price shall include, but not be limited to, sales tax and all other applicable taxes and fees.

BIDDER'S PROPOSAL – BID SCHEDULE

PROJECT NO. 801 0024 70 77
PERRIS BOULEVARD WIDENING
from Ironwood Avenue to Manzanita Avenue

NAME OF BIDDER: _____

ALTERNATE NO. 2 (PERRIS FROM IRONWOOD TO VIA VON BATSCH – PAVEMENT R & R) BID ITEMS AS FOLLOWS:

ITEM NO.	CODE	DESCRIPTION OF ITEMS	ESTIMATED QUANTITY		UNIT PRICE (FIGURES)	TOTAL PRICE (FIGURES)
94.		Traffic Control	%	LS		
95.		Temporary Video Detection System	%	LS		
96.		Adjust Existing Street Survey Monument	1	EA		
97.		AC Pavement Removal	8,411	SY		
98.		Cold Mill Existing AC Depth 2" per Plans	1,460	SF		
99.	F	Unclassified Excavation	3,547	CY		
100.		Asphalt Rubber Hot Mix (ARHM) Wet Process	908	TN		
101.		Hot Mix Asphalt Concrete (AC)	1,711	TN		
102.		Aggregate Base	5,450	TN		
103.	S	Profilograph Asphalt Concrete Pavement	1	LS		
104.		Adjust Manhole to Grade	6	EA		
105.		Adjust Water Valve to Grade	1	EA		
106.		Traffic Signal Detector Loop	10	EA		
TOTAL ALTERNATE NO. 2 BID PRICE (Based on estimated quantities of items 94 through 106)						**$**

Note: Estimated quantities are for the purpose of Bid comparison only; payments will be made on the basis of actual measurement of Work completed, except for lump sum (LS) and final pay (F) quantities. (S) denotes a specialty item. The Bid Price shall include, but not be limited to, sales tax and all other applicable taxes and fees.

BIDDER'S PROPOSAL – BID SCHEDULE

PROJECT NO. 801 0024 70 77
PERRIS BOULEVARD WIDENING
from Ironwood Avenue to Manzanita Avenue

NAME OF BIDDER: _____

ALTERNATE NO. 3 (PERRIS FROM VIA VON BATSCH TO SOUTH OF KALMIA – PAVEMENT R & R) BID ITEMS AS FOLLOWS:

ITEM NO.	CODE	DESCRIPTION OF ITEMS	ESTIMATED QUANTITY		UNIT PRICE (FIGURES)	TOTAL PRICE (FIGURES)
107.		Traffic Control	%	LS		
108.		AC Pavement Removal	10,442	SY		
109.	F	Unclassified Excavation	4,211	CY		
110.		Asphalt Rubber Hot Mix (ARHM) Wet Process	1,129	TN		
111.		Hot Mix Asphalt Concrete (AC)	2,152	TN		
112.		Aggregate Base	6,774	TN		
113.	S	Profilograph Asphalt Concrete Pavement	1	LS		
114.		Adjust Manhole to Grade	12	EA		
115.		Adjust Water Valve to Grade	6	EA		
TOTAL ALTERNATE NO. 3 BID PRICE (Based on estimated quantities of items 107 through 115)						**$**

Note: Estimated quantities are for the purpose of Bid comparison only; payments will be made on the basis of actual measurement of Work completed, except for lump sum (LS) and final pay (F) quantities. (S) denotes a specialty item. The Bid Price shall include, but not be limited to, sales tax and all other applicable taxes and fees.

BIDDER'S PROPOSAL – BID SCHEDULE

PROJECT NO. 801 0024 70 77
PERRIS BOULEVARD WIDENING
from Ironwood Avenue to Manzanita Avenue

NAME OF BIDDER: _____

ALTERNATE NO. 4 (PERRIS FROM BASE BID NORTHERN LIMITS TO MANZANITA – SLURRY SEAL) BID ITEMS AS FOLLOWS:

ITEM NO.	CODE	DESCRIPTION OF ITEMS	ESTIMATED QUANTITY		UNIT PRICE (FIGURES)	TOTAL PRICE (FIGURES)
116.		Traffic Control	%	LS		
117.		Crack Seal and Slurry Seal Existing AC Pavement	76,200	SF		
					TOTAL ALTERNATE NO. 4 BID PRICE (Based on estimated quantities of items 116 through 117)	**$**

Note: Estimated quantities are for the purpose of Bid comparison only; payments will be made on the basis of actual measurement of Work completed, except for lump sum (LS) and final pay (F) quantities. (S) denotes a specialty item. The Bid Price shall include, but not be limited to, sales tax and all other applicable taxes and fees.

BIDDER'S PROPOSAL – BID SCHEDULE

PROJECT NO. 801 0024 70 77
PERRIS BOULEVARD WIDENING
from Ironwood Avenue to Manzanita Avenue

NAME OF BIDDER: _____

ALTERNATE NO. 5 (MEDIAN HARDSCAPE) BID ITEMS AS FOLLOWS:

ITEM NO.	CODE	DESCRIPTION OF ITEMS	ESTIMATED QUANTITY		UNIT PRICE (FIGURES)	TOTAL PRICE (FIGURES)
118.		Construct Median Hardscape	15,300	SF		
					TOTAL ALTERNATE NO. 5 BID PRICE (Based on estimated quantities of item 118)	**$**

Note: Estimated quantities are for the purpose of Bid comparison only; payments will be made on the basis of actual measurement of Work completed, except for lump sum (LS) and final pay (F) quantities. (S) denotes a specialty item. The Bid Price shall include, but not be limited to, sales tax and all other applicable taxes and fees.

BIDDER'S PROPOSAL – BID SCHEDULE

PROJECT NO. 801 0024 70 77
PERRIS BOULEVARD WIDENING
from Ironwood Avenue to Manzanita Avenue

NAME OF BIDDER: _____

ALTERNATE NO. 6 (PERRIS FROM IRONWOOD TO SOUTH OF KALMIA – SLURRY SEAL) BID ITEMS AS FOLLOWS:

ITEM NO.	CODE	DESCRIPTION OF ITEMS	ESTIMATED QUANTITY		UNIT PRICE (FIGURES)	TOTAL PRICE (FIGURES)
119.		Traffic Control	%	LS		
120.		Crack Seal and Slurry Seal Existing AC Pavement	144,900	SF		
TOTAL ALTERNATE NO. 6 BID PRICE (Based on estimated quantities of items 119 through 120)						**$**

Note: Estimated quantities are for the purpose of Bid comparison only; payments will be made on the basis of actual measurement of Work completed, except for lump sum (LS) and final pay (F) quantities. (S) denotes a specialty item. The Bid Price shall include, but not be limited to, sales tax and all other applicable taxes and fees.

Refer to paragraph No. 20 under Instructions to Bidders regarding the Award of Contract.

TOTAL OF BASE BID PRICE PLUS ALTERNATE BID PRICES	**$**

Dated: _____ Signed: _____

Name: _____

Title: _____

SUBCONTRACTOR LISTING

PROJECT NO. 801 0024 70 77
PERRIS BOULEVARD WIDENING
from Ironwood Avenue to Manzanita Avenue

NAME OF BIDDER: _____

Prime Contractors shall be governed by the provisions of the Subletting and Subcontracting Fair Practices Act (California Public Contract Code § 4100 *et seq.*), Bidders shall designate and submit their Bids, the name, business location (city), and portion of the work (type of work) of each subcontractor required to be listed. Starting July 1, 2014, California Assembly Bill 44 will **require** the inclusion of the California contractor license number for each subcontractor. The City may request that the three (3) lowest Bidders submit the additional information identified in this form within 24 hours after the City's written request.

Do not list alternate subcontractors for the same work. If a Bidder fails to specify a subcontractor or lists more than one subcontractor for any portion of the work in excess of one-half (1/2) of one percent (1%), Bidder shall be deemed to have agreed that it is fully qualified to perform and will perform that portion of the Work itself. No Prime Contractor shall substitute any person as subcontractor in place of the subcontractor listed nor shall any subcontract be assigned or transferred except as provided for in the Subletting and Subcontracting Fair Practices Act.

Prime Contractors in violation of any of the provisions of the Subletting and Subcontracting Fair Practices Act are subject to possible cancellation of the Contract and monetary penalties as well as disciplinary action by the Contractors State License Board.

NAME	LICENSE NO. AND CLASSIFICATION		
TELEPHONE	PORTION (TYPE) OF WORK::		
ADDRESS	BID ITEM NOS.	AMOUNT	% OF TOTAL BID
CITY, ZIP			

NAME	LICENSE NO. AND CLASSIFICATION		
TELEPHONE	PORTION (TYPE) OF WORK::		
ADDRESS	BID ITEM NOS.	AMOUNT	% OF TOTAL BID
CITY, ZIP			

[Duplicate and Attach Additional Page(s) as Required]

NAME	LICENSE NO. AND CLASSIFICATION		
TELEPHONE	PORTION (TYPE) OF WORK::		
ADDRESS	BID ITEM NOS.	AMOUNT	% OF TOTAL BID
CITY, ZIP			

NAME	LICENSE NO. AND CLASSIFICATION		
TELEPHONE	PORTION (TYPE) OF WORK::		
ADDRESS	BID ITEM NOS.	AMOUNT	% OF TOTAL BID
CITY, ZIP			

NAME	LICENSE NO. AND CLASSIFICATION		
TELEPHONE	PORTION (TYPE) OF WORK::		
ADDRESS	BID ITEM NOS.	AMOUNT	% OF TOTAL BID
CITY, ZIP			

BOND NO. _____

BIDDER'S BOND

PROJECT NO. 801 0024 70 77
PERRIS BOULEVARD WIDENING
from Ironwood Avenue to Manzanita Avenue

KNOW ALL MEN OR WOMEN BY THESE PRESENTS:

That _____, as Principal, hereinafter referred to as

"Contractor," and _____, a duly authorized corporate as Surety, are held and firmly bound unto the City of Moreno Valley in the penal sum of TEN PERCENT (10%) OF THE TOTAL AMOUNT OF THE BID (Total Base Bid Price plus Alternate Bid Price, if any) of the Contractor above named, submitted by said Contractor to the City of Moreno Valley for the Work for said Project entitled above, for the payment of which sum in lawful money of the United States, well and truly to be made, to the City of Moreno Valley to which said Bid was submitted, we bind ourselves, our heirs, executors, administrators and successors, jointly and severally liable (CCP 995.320 (a)(1), PCC 20171), firmly by these presents. In no case shall the liability of the Surety hereunder exceed the amount of:

_____.

THE CONDITION OF THIS OBLIGATION IS SUCH:

That whereas the Contractor has submitted the above-mentioned Bid to the City of Moreno Valley as aforesaid for the Work for said Project entitled above.

NOW, THEREFORE, if the aforesaid Contractor is awarded the Contract and, within the time and manner required under the Bid Documents, after the prescribed forms are presented to him or her for signature, enters into a written Agreement in the prescribed form and in accordance with the Bid Documents, and files two bonds with the City of Moreno Valley, one to guarantee Faithful Performance and the other to guarantee payment for labor and materials, in accordance with said Bidding Documents, and as required by law, and files the required insurance certificate(s) in accordance with said Bidding Documents, then this obligation shall be null and void; otherwise, it shall be and remain in full force and effect until execution of the Agreement or forfeiture pursuant to the Provisions of Sections 20172 and 20174 of the Public Contract Code. The Surety hereby waives notice of an agreement between the City and Contractor to extend the time in which the City may accept the Bid.

In the event suit is brought upon this bond by the City and judgment is recovered, the Surety shall pay all costs incurred by the City in such suit, including a reasonable attorney fee to be fixed by the court.

(SIGNATURE PAGE FOLLOWS)

IN WITNESS WHEREOF, we have hereunto set our hands and seals on this ____ day of

_____, 20___.

BIDDER (Principal)	CORPORATE SURETY
Name: _____	Company Name: _____
Address: _____	Address: _____
_____	_____
Telephone No.: _____	Telephone No.: _____
Print Name: _____	Print Name: _____
Title: _____	
Signature: _____	Signature: _____ (Attorney-In-Fact)
Date: _____	Date: _____

SIGNING INSTRUCTIONS

- **The bond shall be executed by a California admitted surety insurer (CCP 995.311).**
- **The bond shall include an attached Notary Certificate for the Attorney-in-Fact.**
- **The bond shall include an attached Notary Certificate for the Bidder.**
- **The bond shall include an attached original Power of Attorney only authorizing the Attorney-in-Fact to act for the Surety.**
- **The bond shall include the address at which the Principal (Bidder) and Surety may be served with notices, papers and other documents.**
- **The Bidder's and Surety's corporate seal may be affixed hereto.**

If any of the above items are omitted, the Bid will be considered non-responsive and will be rejected.

CALIFORNIA ALL-PURPOSE CERTIFICATE OF ACKNOWLEDGMENT

SAMPLE

State of California

County of _____

On _____ before me, _____,
(Here insert name and title of the officer)

personally appeared _____,

who proved to me on the basis of satisfactory evidence to be the person(s) whose name(s) is/are subscribed to the within instrument and acknowledgement to me that he/she they executed the same in his/her/their authorized capacity(ies), and that by his/her/their signature(s) on the instrument the person(s), or the entity upon behalf of which the person(s) acted, executed the instrument.

I certify under PENALTY OF PERJURY under the laws of the State of California that the foregoing paragraph is true and correct.

WITNESS my hand and official seal.

_____ (Notary Seal)
Signature of Notary Public

ADDITIONAL OPTIONAL INFORMATION

DESCRIPTION OF THE ATTACHED DOCUMENT

BIDDER'S BOND SIGNATURE PAGE
(Title or description of attached document)

_____
(Title or description of attached document continued)

Number of Pages _____

Document Date _____

_____
Additional Information

CAPACITY CLAIMED BY THE SIGNER

☐ Individual(s)
☐ Corporate Officer
_____
(Title)
☐ Partner (s)
☐ Attorney-in-Fact
☐ Other _____

INSTRUCTIONS FOR COMPLETING THIS FORM

Any acknowledgment completed in California must contain verbiage exactly as appears above in the notary section or a separate acknowledgment form must be property completed and attached to that document. The only exception is if a document is recorded outside of California. In such instances, any alternative acknowledgment verbiage as may be printed on such a document so long as the verbiage does not require the notary to do something that is illegal for a notary in California (i.e. certifying the authorized capacity of the signer). Please check the document carefully for proper notarial wording and attach this form if required.

- State and County information must be the State and County where the document signer(s) personally appeared before the notary public for acknowledgment.
- Date of notarization must be the date that the signer(s) personally appeared which must also be the same date the acknowledgment is completed.
- The notary public must print his or her name as it appears within his or her commission followed by a comma and then your title (notary public).
- Print the name(s) of document signer(s) who personally appear at the time of notarization.
- Indicate the correct singular or plural forms by crossing off incorrect forms (i.e. ~~he~~/she/~~they~~, is/~~are~~) or circling the correct forms. Failure to correctly indicate this information may lead to rejection of document recording.
- The notary seal impression must be clear and photographically reproducible. Impression must not cover text or lines. If seal impression smudges, re-seal if a sufficient area permits, otherwise complete a different acknowledgment form.
- Signature of the notary public must match the signature on file with the office of the county clerk.
  - Additional information is not required but could help to ensure this acknowledgment is not misused or attached to a different document.
  - Indicate title or type of attached document, number of pages and date.
  - Indicate the capacity claimed by the signer. If the claimed capacity is a corporate officer, indicate the title (i.e. CEO, CFO, Secretary).
- Securely attach this document to the signed document.

BIDDER'S PROPOSAL – CONTRACTOR'S STATEMENT

PROJECT NO. 801 0024 70 77
PERRIS BOULEVARD WIDENING
from Ironwood Avenue to Manzanita Avenue

NAME OF BIDDER: _____

GENERAL

To be considered, all information requested must be submitted on this Contractor's Statement form or on sheets which clearly identify the paragraph number and subparts being responded to. Additionally, to the extent this form does not provide sufficient space to fully respond, contractors should attach additional sheets as necessary referencing the appropriate paragraph number and subparagraph. The Contractor's Statements shall not be public records.

All questions must be answered and the data must be clear and complete. Line items that do not require a response shall be noted with a "N/A" referencing items that are not applicable.

1. Contractor is able to obtain insurance for the Bid Package with the minimum scope and limits specified in **Paragraph 7** of the Agreement.

   ☐ Yes ☐ No

2. Contractor has current workers' compensation insurance policy as required by the Labor Code or is legally self-insured pursuant to Labor Code section 3700 *et seq.*

   ☐ Yes ☐ No

   ☐ Contractor is exempt from this requirement, because it has no employees

3. Have you been in business for a minimum of **three (3) years** under the contractor's license used for the Bid you are submitting?

   ☐ Yes ☐ No

4. Have you satisfactorily completed: **1)** at least **one (1)** prevailing wage public contract in California; **and 2)** at least **one (1)** contract comparable in scope and scale to the Project for which the Bid is submitted, completed within **five (5)** years prior to the Bid Deadline and with the dollar value of Bidder's portion of each such project in excess of the Base Bid Price submitted for this Project?

   ☐ Yes ☐ No

5. Has your contractor's license been revoked at any time in the last five years?

   ☐ Yes ☐ No

6. Has a surety firm completed a contract on your behalf, or paid for completion because your firm was default terminated by the project owner within the last five (5) years?

☐ Yes ☐ No

7. Complete the following information for each project for which a bonding company has had to complete any part of your work during the last five (5) years. (Attach additional sheets as necessary.)

(a) Project: _____

(b) Amount Bonded: _____

(c) Bonding Company: _____

(d) Percent of Project Completed: _____

(e) Name of Contractor Completing Project: _____

8. At the time of submitting this form, is your firm ineligible to bid on or be awarded a public works contract, or perform as a subcontractor on a public works contract, pursuant to Labor Code section 1777.1, Labor Code section 1777.7?

☐ Yes ☐ No

If the answer is "Yes," state the beginning and ending dates of the period of debarment:

_____

9. At the time of submitting this form, is your firm debarred or otherwise ineligible to bid on or be awarded contracts from the City of Moreno Valley, the federal government, or any other public agencies in California?

☐ Yes ☐ No

If the answer is "Yes," state the beginning and ending dates of the period of debarment:

_____

10. At any time during the last five years, has your firm, or any of its owners or officers, been convicted of a crime involving the awarding of a contract of a government construction project, or the bidding or performance of a government contract?

☐ Yes ☐ No

11. Has your firm, or any of its owners or officers, been issued, within a two (2) year period, three (3) final administrative or criminal citations for violations of the City of Moreno Valley Municipal Code?

☐ Yes ☐ No

12. How many years has your organization been in business? _____

13. What year was your organization established? _____

14. How many years has your organization been in business under its present business name?

_____

15. Under what other or former names has your organization operated?

_____
_____
_____

16. Identify parent company if applicable: _____

17. Have you ever been licensed under a different name or different license number?

☐ Yes ☐ No

If the answer is yes, give name and license number:

_____
_____
_____
_____

18. Complete the following information for **completed** construction contracts with public agencies, including, but not limited to contracts with the City of Moreno Valley. (List three projects maximum. Attach additional sheets as necessary, but answer all questions identified below for each project.)

Project #1

(a) Name of Agency's Project Manager: _____

(b) Name of Project: _____

(c) Name of Agency: _____

(d) Project Address: _____

City: _____ State: _____ Zip: _____

(e) Agency's Contact Phone: (___) _____

(f) Type of Facility: _____

(g) Contract Type: _____

(h) Contract Amount: _____

(i) Percent Change Orders to Base Contract: _____

(j) Percent Complete: _____

(k) Percent Work Performed With Own Forces: _____

(l) Scheduled Completion Date: _____

(m) Actual Completion Date: _____

(n) Explain any differences between scheduled and actual completion dates:

_____

_____

(o) Explain any differences between the original contract price and the actual cost to complete:

_____

_____

_____

Project #2

(a) Name of Agency's Project Manager: _____

(b) Name of Project: _____

(c) Name of Agency: _____

(d) Project Address: _____

City: _____ State: _____ Zip: _____

(e) Agency's Contact Phone: (___) _____

(f) Type of Facility: _____

(g) Contract Type: _____

(h) Contract Amount: _____

(i) Percent Change Orders to Base Contract: _____

(j) Percent Complete: _____

(k) Percent Work Performed With Own Forces: _____

(l) Scheduled Completion Date: _____

(m) Actual Completion Date: _____

(n) Explain any differences between scheduled and actual completion dates:

_____

_____

(o) Explain any differences between the original contract price and the actual cost to complete:

_____

_____

_____

Project #3

(a) Name of Agency's Project Manager: _____

(b) Name of Project: _____

(c) Name of Agency: _____

(d) Project Address: _____

City: _____ State: _____ Zip: _____

(e) Agency's Contact Phone: (___) _____

(f) Type of Facility: _____

(g) Contract Type: _____

(h) Contract Amount: _____

(i) Percent Change Orders to Base Contract: _____

(j) Percent Complete: _____

(k) Percent Work Performed With Own Forces: _____

(l) Scheduled Completion Date: _____

(m) Actual Completion Date: _____

(n) Explain any differences between scheduled and actual completion dates:

_____

_____

(o) Explain any differences between the original contract price and the actual cost to complete:

_____

_____

_____

19. List any projects in which your organization has been involved in any claim for delay, extra work or equitable contract adjustment in the last five years in which the amount in controversy exceeded $25,000. Identify claims by name of project, parties involved, description of claim and ultimate resolution (attach additional sheets as necessary):

(a) Name of Project: _____

(b) Project Location: _____

(c) Date of Claim: _____

(d) Parties Involved: _____

_____

(e) Description of Claim: _____

_____

_____

(f) Result: _____

20. Has your organization ever been terminated from a project before completion? If so, please provide the following information: (List three projects maximum. Attach additional sheets as necessary.)

Project #1

(a) Name of Project: _____
(b) Project Location: _____
(c) Client Name: _____
(d) Client Contact: _____
(e) Client Telephone No: _____
(f) Architect Name: _____
(g) Architect Telephone No: _____
(h) Date of Termination: _____
(i) Reason for Termination: _____

Project #2

(a) Name of Project: _____
(b) Project Location: _____
(c) Client Name: _____
(d) Client Contact: _____
(e) Client Telephone No: _____
(f) Architect Name: _____
(g) Architect Telephone No: _____
(h) Date of Termination: _____
(i) Reason for Termination: _____

Project #3

(a) Name of Project: _____
(b) Project Location: _____
(c) Client Name: _____
(d) Client Contact: _____
(e) Client Telephone No: _____

(f) Architect Name: _____

(g) Architect Telephone No: _____

(h) Date of Termination: _____

(i) Reason for Termination: _____

_____

_____

I, the undersigned, certify and declare that I have read all the foregoing answers to the questionnaire and know their contents. The matters stated in the questionnaire answers are true of my own knowledge and belief, except as to those matters stated on information and belief, and as to those matters I believe them to be true. I declare under penalty of perjury under the laws of the State of California that the foregoing is correct.

Dated: _____ Signed: _____

Name: _____

Title: _____

(The signature must be accompanied by a completed notary certificate of acknowledgement attached hereto. Note the description of the document on the notary certificate. The corporate seal may be affixed hereto.)

CALIFORNIA ALL-PURPOSE CERTIFICATE OF ACKNOWLEDGMENT

SAMPLE

State of California

County of _____

On _____ before me, _____,
(Here insert name and title of the officer)

personally appeared _____,

who proved to me on the basis of satisfactory evidence to be the person(s) whose name(s) is/are subscribed to the within instrument and acknowledgement to me that he/she they executed the same in his/her/their authorized capacity(ies), and that by his/her/their signature(s) on the instrument the person(s), or the entity upon behalf of which the person(s) acted, executed the instrument.

I certify under PENALTY OF PERJURY under the laws of the State of California that the foregoing paragraph is true and correct.

WITNESS my hand and official seal.

_____ (Notary Seal)
Signature of Notary Public

ADDITIONAL OPTIONAL INFORMATION

DESCRIPTION OF THE ATTACHED DOCUMENT

BIDDER'S PROPOSAL
(Title or description of attached document)

_____
(Title or description of attached document continued)

Number of Pages _____

Document Date _____

_____
Additional Information

CAPACITY CLAIMED BY THE SIGNER

- ☐ Individual(s)
- ☐ Corporate Officer

_____
(Title)

- ☐ Partner (s)
- ☐ Attorney-in-Fact
- ☐ Other _____

INSTRUCTIONS FOR COMPLETING THIS FORM

Any acknowledgment completed in California must contain verbiage exactly as appears above in the notary section or a separate acknowledgment form must be property completed and attached to that document. The only exception is if a document is recorded outside of California. In such instances, any alternative acknowledgment verbiage as may be printed on such a document so long as the verbiage does not require the notary to do something that is illegal for a notary in California (i.e. certifying the authorized capacity of the signer). Please check the document carefully for proper notarial wording and attach this form if required.

- State and County information must be the State and County where the document signer(s) personally appeared before the notary public for acknowledgment.
- Date of notarization must be the date that the signer(s) personally appeared which must also be the same date the acknowledgment is completed.
- The notary public must print his or her name as it appears within his or her commission followed by a comma and then your title (notary public).
- Print the name(s) of document signer(s) who personally appear at the time of notarization.
- Indicate the correct singular or plural forms by crossing off incorrect forms (i.e. ~~he~~/she/~~they~~, is/~~are~~) or circling the correct forms. Failure to correctly indicate this information may lead to rejection of document recording.
- The notary seal impression must be clear and photographically reproducible. Impression must not cover text or lines. If seal impression smudges, re-seal if a sufficient area permits, otherwise complete a different acknowledgment form.
- Signature of the notary public must match the signature on file with the office of the county clerk.
- Additional information is not required but could help to ensure this acknowledgment is not misused or attached to a different document.
- Indicate title or type of attached document, number of pages and date.
- Indicate the capacity claimed by the signer. If the claimed capacity is a corporate officer, indicate the title (i.e. CEO, CFO, Secretary).
- Securely attach this document to the signed document.

Agreement No._____

AGREEMENT

PROJECT NO. 801 0024 70 77

PERRIS BOULEVARD WIDENING
from Ironwood Avenue to Manzanita Avenue

THIS Agreement, effective as of the date signed by the City of Moreno Valley by and between the City of Moreno Valley, a municipal corporation, County of Riverside, State of California, hereinafter called the "City" and _____, hereinafter called the "Contractor."

That the City and the Contractor for the consideration hereinafter named, agree as follows:

1. CONTRACT DOCUMENTS. The Contract Documents consist of the following, which are incorporated herein by this reference:

A. Governmental approvals, including, but not limited to, permits required for the Work
B. Any and all Contract Change Orders issued after execution of this Agreement
C. This Agreement
D. Addenda Nos. _____ inclusive, issued prior to the opening of the Bids
E. City Special Provisions, including the General Provisions and Technical Provisions
F. Standard Specifications for Public Works Construction ("Greenbook") – latest edition in effect at the Bid Deadline, as modified by the City Special Provisions
G. Reference Specifications/Reference Documents other than those listed in paragraph 2, below
H. Project Plans
I. City Standard Plans
J. Caltrans Standard Plans
K. Other Agency Standard Plans
L. The bound Bidding Documents
M. Contractor's Certificates of Insurance and Additional Insured Endorsements
N. Contractor's Bidder's Proposal and Subcontractor Listing

In the event of conflict between any of the Contract Documents, the provisions placing a more stringent requirement on the Contractor shall prevail. The Contractor shall provide the better quality or greater quantity of Work and/or materials unless otherwise directed by City in writing. In the event none of the Contract Documents place a more stringent requirement or greater burden on the Contractor, the controlling provision shall be that which is found in the document with higher precedence in accordance with the above order of precedence.

2. REFERENCE DOCUMENTS. The following Reference Documents are not considered Contract Documents and are made available to the Contractor for informational purposes:

A. Geotechnical Reports

3. SCOPE OF WORK. The Contractor shall perform and provide all materials, tools, equipment, labor, and services necessary to complete the Work described in the Contract

Documents, except as otherwise provided in the Plans, Standard Specifications, or City Special Provisions to be the responsibility of others.

4. PAYMENT.

4.1. **Contract Price and Basis for Payment**. In consideration for the Contractor's full, complete, timely, and faithful performance of the Work required by the Contract Documents, the City shall pay Contractor for the actual quantity of Work required under the Bid Items awarded by the City performed in accordance with the lump sum prices and unit prices for Bid Items and Alternate Bid Items, if any, set forth the Bidder's Proposal submitted with the Bid. The sum of the unit prices and lump sum prices for the Base Bid Items and Alternate Bid Items, if any, awarded by the City is __ _____ Dollars ($_____) ("Contract Price"). The Alternate Bid Items selected by the City and included in the Contract are: _____, _____, and _____. It is understood and agreed that the quantities set forth in the Bidder's Proposal for which unit prices are fixed are estimates only and that City will pay and Contractor will accept, as full payment for these items of work, the unit prices set forth in the Bidder's Proposal multiplied by the actual number of units performed, constructed, or completed as directed by the City Engineer.

4.2. **Payment Procedures**. Based upon applications for payment submitted by the Contractor to the City, the City shall make payments to the Contractor in accordance with Article 9 of the Standard Specifications, as modified by Article 9 of the City Special Provisions.

5. CONTRACT TIME.

A. Contract Time. The Contract Time shall be determined in accordance with the following:

Base Bid	250 Working Days
Alternate No. 1	10 Working Days
Alternate No. 2	15 Working Days
Alternate No. 3	15 Working Days
Alternate No. 4	5 Working Days
Alternate No. 5	15 Working Days
Alternate No. 6	5 Working Days

B. Initial Notice to Proceed. After the Agreement has been fully executed by the Contractor and the City, the City shall issue the "Notice to Proceed to Fulfill Preconstruction Requirements." The date specified in the Notice to Proceed to Fulfill Preconstruction Requirements constitutes the date of commencement of the Contract Time of **two hundred fifty (250) Working Days for the Base Bid and up to three hundred fifteen (315) Working Days for the Base Bid plus Alternate Nos. 1 - 6.** The Contract Time includes the time necessary to fulfill preconstruction requirements, place the order of materials, and to complete construction of the Project (except as adjusted by subsequent Change Orders).

The Notice to Proceed to Fulfill Preconstruction Requirements shall further specify that Contractor must complete the preconstruction requirements and order materials within **Fifteen (15) Working Days** after the date of commencement of the Contract Time; this duration is part of the Contract Time.

Preconstruction requirements include, but are not limited to, the following:

- Submitting and obtaining approval of Traffic Control Plans
- Submitting and obtaining approval of the Stormwater Pollution Prevention Plan (SWPPP)/Water Pollution Control Plan (WPCP)
- Submitting and obtaining approval of critical required submittals
- Installation of the approved Project Identification Signs
- Obtaining an approved no fee Encroachment Permit
- Obtaining a Temporary Use Permit for a construction yard
- Notifying all agencies, utilities, residents, etc., as outlined in the Bidding Documents

If the City's issuance of a Notice to Proceed to Fulfill Preconstruction Requirements is delayed due to Contractor's failure to return the fully executed Agreement and insurance and bond documents within ten (10) Working Days after Contract award, then Contractor agrees to the deduction of one (1) Working Day from the number of days to complete the Project for every Working Day of delay in the City's receipt of said documents. This right is in addition to and does not affect the City's right to demand forfeiture of Contractor's Bid Security if Contractor persistently delays in providing the required documentation.

C. Notice to Proceed with Construction. After all preconstruction requirements are met in accordance with the Notice to Proceed to Fulfill Preconstruction Requirements, the City shall issue the "Notice to Proceed with Construction," at which time the Contractor shall diligently prosecute the Work, including corrective items of Work, day to day thereafter, within the remaining Contract Time.

D. Notice to Proceed to Pothole Pole Foundation Locations and Notice to Proceed with Order of Materials. At the appropriate time, as determined by the City and per these Specifications, the City will issue the Notice to Proceed Pothole Foundation Locations and the Notice to Proceed with Order of Materials.

6. LIQUIDATED DAMAGES AND CONTROL OF WORK

6.1. **Liquidated Damages.** The Contractor and City (collectively, the "Parties") have agreed to liquidate damages with respect to Contractor's failure to order all materials in accordance with the Notice to Proceed with Order of Materials and/or failure to fulfill the preconstruction requirements, and/or failure to complete the Work within the Contract Time. The Parties intend for the liquidated damages set forth herein to apply to this Contract as set forth in Government Code Section 53069.85. Contractor acknowledges and agrees that the liquidated damages are intended to compensate the City solely for Contractor's failure to meet the deadline for completion of the Work and will not excuse Contractor from liability from any other breach, including any failure of the Work to conform to the requirements of the Contract Documents.

In the event that Contractor fails to order all materials in accordance with the Notice to Proceed with Order of Materials and/or fails to fulfill the preconstruction requirements and/or fails to complete the Work within the Contract Time, Contractor agrees to pay the City **$775 per Calendar day** that completion of the Work is delayed beyond the Contract Time, as adjusted by Contract Change Orders. The Contractor will not be assessed liquidated damages for delays occasioned by the failure of the City or of the owner of a utility to provide for the removal or relocation of utility facilities.

The Contractor and City acknowledge and agree that the foregoing liquidated damages have been set based on an evaluation of damages that the City will incur in the event of late completion of the

Work. The Contractor and City acknowledge and agree that the amount of such damages are impossible to ascertain as of the date of execution hereof and have agreed to such liquidated damages to fix the City's damages and to avoid later disputes. It is understood and agreed by Contractor that liquidated damages payable pursuant to this Agreement are not a penalty and that such amounts are not manifestly unreasonable under the circumstances existing as of the date of execution of this Agreement.

It is further mutually agreed that the City will have the right to deduct liquidated damages against progress payments or retainage and that the City will issue a Change Order or Construction Change Directive and reduce the Contract Price accordingly. In the event the remaining unpaid Contract Price is insufficient to cover the full amount of liquidated damages, Contractor shall pay the difference to the City.

6.2. Any work completed by the Contractor after the issuance of a Stop Work Notice by the City shall be rejected and/or removed and replaced as specified in Section 2-11 of the Special Provisions.

6.3. **Owner is Exempt from Liability for Early Completion Delay Damages**. While the Contractor may schedule completion of all of the Work, or portions thereof, earlier than the Contract Time, the Owner is exempt from liability for and the Contractor will not be entitled to an adjustment of the Contract Sum or to any additional costs, damages, including, but not limited to, claims for extended general conditions costs, home office overhead, jobsite overhead, and management or administrative costs, or compensation whatsoever, for use of float time or for Contractor's inability to complete the Work earlier than the Contract Time for any reason whatsoever, including but not limited to, delay cause by Owner or other Excusable Compensable Delay. See Section 6-6 of the Standard Specifications and City Special Provisions regarding compensation for delays.

7. INSURANCE.

7.1. **General**. The Contractor shall procure and maintain at its sole expense and throughout the term of this Agreement, any extension thereof, Commercial General Liability, Automobile Liability, and Workers' Compensation Insurance with such coverage limits as described herein.

7.2. **Additional Insured Endorsements**. The Contractor shall cause the insurance required by the Contract Document to include the City of Moreno Valley, the City Council and each member thereof, the Moreno Valley Housing Authority (MVHA), and the Moreno Valley Community Services District (CSD), and their respective officials, employees, commission members, officers, directors, agents, employees, volunteers and representatives as an additional insureds. For the Commercial General Liability coverage, said parties shall be named as additional insureds utilizing either:

1. Insurance Services Office ("ISO") Additional Insured endorsement CG 20 10 (11/85); or

2. ISO Additional Insured endorsement CG 20 10 (10/01) and Additional Insured Completed Operations endorsement CG 20 37 (10/01); or

3. substitute endorsements providing equivalent coverage, approved by the City.

The endorsements shall be signed by a person authorized by the insurer to bind coverage on its behalf. The coverage shall contain no special limitations on the scope of protection afforded to such additional insureds. Coverage for such additional insureds does not extend to liability to the extent prohibited by Insurance Code Section 11580.4.

7.3. **Waivers of Subrogation**. All policies of insurance required by the Contract Documents shall include or be endorsed to provide a waiver by the insurers of any rights of recovery or subrogation that the insurers may have at any time against the City of Moreno Valley, the City Council and each member thereof, the Moreno Valley Housing Authority (MVHA), and the Moreno Valley Community Services District (CSD), and their respective officials, employees, commission members, officers, directors, agents, employees, volunteers and representatives.

7.4. **Primary Coverage**. All policies and endorsements shall stipulate that the Contractor's (and the Subcontractors') insurance coverage shall be primary insurance as respects the City of Moreno Valley, the City Council and each member thereof, the Moreno Valley Housing Authority (MVHA), and the Moreno Valley Community Services District (CSD), and their respective officials, employees, commission members, officers, directors, agents, employees, volunteers and representatives, and shall be excess of the Contractor's (and its Subcontractors') insurance and shall not contribute with it.

7.5. **Coverage Applies Separately to Each Insured and Additional Insured**. Coverage shall state that the Contractor's (and its Subcontractors') insurance shall apply separately to each insured or additional insured against whom claim is made or suit is brought, except with respect to the limits of the insurer's liability. Coverage shall apply to any claim or suit brought by an additional insured against a named insured or other insured.

7.6. **Self-Insurance**. Any self-insurance (including deductibles or self-insured retention in excess of $50,000) in lieu of liability insurance must be declared by Contractor and approved by the City in writing prior to execution of the Agreement. The City's approval of self-insurance, if any, is within the City's sole discretion and is subject to the following conditions:

1. Contractor must, at all times during the term of the Agreement and for a period of at least **one (1)** year after completion of the Project, and any extension of the one-year correction guarantee period in accordance with Section 6-8.1 of the City Special Provisions, maintain and upon Owner's reasonable request provide evidence of:

   (a) Contractor's "net worth" (defined as "total assets" [defined as all items of value owned by the Contractor including tangible items such as cash, land, personal property and equipment and intangible items such as copyrights and business goodwill]) minus total outside liabilities must be reflected in a financial statement for the prior fiscal year reflecting sufficient income and budget for Contractor to afford at least one loss in an amount equal to the amount of self-insurance;

   (b) financial statements showing that Contractor has funds set aside/budgeted to finance the self-insured fund (i.e., Contractor has a program that fulfills functions that a primary insurer would fill; and

   (c) a claims procedure that identifies how a claim is supposed to be tendered to reach the financing provided by the self-insured fund.

2. If at any time after such self-insurance has been approved Contractor fails to meet the financial thresholds or otherwise fails to comply with the provisions set forth in this Paragraph 7, at the option of the City:

   (a) the Contractor shall immediately obtain and thereafter maintain the third party insurance required under this Paragraph 7 and otherwise on the terms required above; or

   (b) the insurer shall reduce or eliminate such deductibles or self-insured retention as respects the City, its officers, officials, employees and volunteers; or

   (c) the Contractor shall procure a bond guaranteeing payment of losses and related investigation, claim administration, and defense expenses.

7.7. **Insurer Financial Rating**. Insurance companies providing insurance hereunder shall be rated A-:VII or better in Best's Insurance Rating Guide and shall be legally licensed and qualified to conduct insurance business in the State of California.

7.8. **Notices to City of Cancellation or Changes**. Each insurance policy described in this Paragraph 7 shall contain a provision or be endorsed to state that coverage will not be cancelled without **thirty (30) days'** prior written notice by certified or registered mail to the City (this obligation may be satisfied in the alternative by requiring such notice to be provided by Contractor's insurance broker and set forth on its Certificate of Insurance provided to the City), except that cancellation for non-payment of premium shall require (10) days prior written notice by certified or registered mail. If an insurance carrier cancels any policy or elects not to renew any policy required to be maintained by Contractor pursuant to the Contract Documents, Contractor agrees to give written notice to the City at the address indicated on the first page of the Agreement. Contractor agrees to provide the same notice of cancellation and non-renewal to the City that is required by such policy(ies) to be provided to the First Named Insured under such policy(ies). Contractor shall provide confirmation that the required policies have been renewed not less than seven (7) days prior to the expiration of existing coverages and shall deliver renewal or replacement policies, certificates and endorsements to the City Clerk within fourteen (14) days of the expiration of existing coverages. Contractor agrees that upon receipt of any notice of cancellation or alteration of the policies, Contractor shall procure within five (5) days, other policies of insurance similar in all respects to the policy or policies to be cancelled or altered. Contractor shall furnish to the City Clerk copies of any endorsements that are subsequently issued amending coverage or limits within fourteen (14) days of the amendment.

7.9. **Commercial General Liability**. Coverage shall be written on an ISO Commercial General Liability "occurrence" form CG 00 01 (10/01 or later edition) or equivalent form approved by the City for coverage on an occurrence basis. The insurance shall cover liability, including, but not limited to, that arising from premises operations, stop gap liability, independent contractors, products-completed operations, personal injury, advertising injury, and liability assumed under an insured contract. The policy shall be endorsed to provide the Aggregate Per Project Endorsement ISO form CG 25 03 (11/85). Coverage shall contain no contractors' limitation or other endorsement limiting the scope of coverage for liability arising from pollution, explosion, collapse, or underground (x, c, u) property damage. Contractor shall provide Products/Completed Operations coverage to be maintained continuously for a minimum of **one (1) year** after Final Acceptance of the Work, and any

extension of the one-year correction guarantee period in accordance with Section 6-8.1 of the City Special Provisions.

Contractor shall maintain Commercial General Liability insurance with the following minimum limits: $1,000,000 per occurrence / $2,000,000 aggregate / $2,000,000 products-completed operations.

7.10. **Business Automobile Liability**. Coverage shall be written on ISO form CA 00 01 (12/93 or later edition) or a substitute form providing equivalent coverage for owned, hired, leased and non-owned vehicles, whether scheduled or not, with $1,000,000 combined single limit per accident for bodily injury and property damage. If necessary, the policy shall be endorsed to provide contractual liability coverage.

7.11. **Workers' Compensation**. Contractor shall comply with the applicable sections of the California Labor Code concerning workers' compensation for injuries on the job. Compliance is accomplished in one of the following manners:

1. Provide copy of permissive self-insurance certificate approved by the State of California; or
2. Secure and maintain in force a policy of workers' compensation insurance with statutory limits and Employer's Liability Insurance with a minimal limit of **$1,000,000** per accident; or
3. Provide a "waiver" form certifying that no employees subject to the Labor Code's Workers' Compensation provision will be used in performance of this Contract.

7.12. **Subcontractors' Insurance**. The Contractor shall include all Subcontractors as insureds under its policies or shall furnish separate certificates and endorsements for each Subcontractor. All coverages for Subcontractors shall be subject to all of the requirements stated herein.

8. BONDS. The Contractor shall furnish a satisfactory Performance Bond meeting all statutory requirements of the State of California on the form provided by the City. The bond shall be furnished as a guarantee of the faithful performance of the requirements of the Contact Documents as may be amended from time to time, including, but not limited to, liability for delays and damages (both direct and consequential) to the City and the City's Separate Contractors and consultants, warranties, guarantees, and indemnity obligations, in an amount that shall remain equal to one hundred percent (100%) of the Contract Price.

The Contractor shall furnish a satisfactory Labor and Materials Payment Bond meeting all statutory requirements of the State of California on the form provided by the City in an amount that shall remain equal to one hundred percent (100%) of the Contract Price to secure payment of all claims, demands, stop notices, or charges of the State of California, of material suppliers, mechanics, or laborers employed by the Contractor or by any Subcontractor, or any person, form, or entity eligible to file a stop notice with respect to the Work.

All bonds shall be executed by a California-admitted surety insurer. Bonds issued by a California-admitted surety insurer listed on the latest version of the U.S Department of Treasury Circular 570 shall be deemed accepted unless specifically rejected by the City. Bonds issued by sureties not listed in Treasury Circular 570 must be accompanied by all documents enumerated in California Code of Civil Procedure Section 995.660(a). The bonds shall bear the same date as the Contract. The attorney-in-fact who executes the required bonds on behalf of the surety shall affix thereto a

certified and current copy of the power of attorney. In the event of changes that increase the Contract Price, the amount of each bond shall be deemed to increase and at all times remain equal to the Contract Price. The signatures shall be acknowledged by a notary public. Every bond must display the surety's bond number and incorporate the Contract for construction of the Work by reference. The terms of the bonds shall provide that the surety agrees that no change, extension of time, alteration, or modification of the Contract Documents or the Work to be performed thereunder shall in any way affect its obligations and shall waive notice of any such change, extension of time, alteration, or modification of the Contract Documents. The surety further agrees that it is obligated under the bonds to any successor, grantee, or assignee of the City.

Upon the request of any person or entity appearing to be a potential beneficiary of bonds covering payment of obligations arising under the Contract, the Contractor shall promptly furnish a copy of the bonds or shall authorize a copy to be furnished.

Should any bond become insufficient, or should any of the sureties, in the opinion of the City, become non-responsible or unacceptable, the Contractor shall, within ten (10) Calendar Days after receiving notice from the City, provide written documentation to the Satisfaction of the City that Contractor has secured new or additional sureties for the bonds; otherwise the Contractor shall be in default of the Contract. No further payments shall be deemed due or will be made under Contract until a new surety(ies) qualifies and is accepted by the City.

Contractor agrees that the Labor and Materials Payment Bond and Faithful Performance Bond attached to this Agreement are for reference purposes only, and shall not be considered a part of this Agreement. Contractor further agrees that said bonds are separate obligations of the Contractor and its surety, and that any attorney's fee provision contained in any payment bond or performance bond shall not apply to this Agreement. In the event there is any litigation between the parties arising from the breach of this Agreement, each party will bear its own attorneys' fees in the litigation.

9. RECORDS. The Contractor and its Subcontractors shall maintain and keep books, payrolls, invoices of materials, and Project records current, and shall record all transactions pertaining to the Contract in accordance with generally acceptable accounting principles. Said books and records shall be made available to the City of Moreno Valley, Riverside County, the State of California, the Federal Government, and to any authorized representative thereof for purposes of audit and inspection at all reasonable times and places. All such books, payrolls, invoices of materials, and records shall be retained for at least three (3) years after Final Acceptance.

10. INDEMNIFICATION.

10.1. **General**. To the fullest extent permitted by law, the Contractor assumes liability for and agrees, at the Contractor's sole cost and expense, to promptly and fully indemnify, protect, hold harmless and defend (even if the allegations are false, fraudulent, or groundless), the City of Moreno Valley, its City Council, the Moreno Valley Housing Authority (MVHA), and the Moreno Valley Community Services District (CSD), and all of their respective officials, officers, directors, employees, commission members, representatives and agents ("Indemnitees"), from and against any and all claims, allegations, actions, suits, arbitrations, administrative proceedings, regulatory proceedings, or other legal proceeds, causes of action, demands, costs, judgments, liens, stop notices, penalties, liabilities, damages, losses, anticipated losses of revenues, and expenses (including, but not limited to, any fees of accountants, attorneys, experts or other professionals, or investigation expenses), or losses of any kind or nature whatsoever, whether actual, threatened or alleged, arising out of, resulting from, or in any way (either directly or indirectly), related to the Work,

the Project or any breach of the Contract by Contractor or any of its officers, agents, employees, Subcontractors, Sub-subcontractors, or any person performing any of the Work, pursuant to a direct or indirect contract with the Contractor ("Indemnity Claims"). Such Indemnity Claims include, but are not limited to, claims for:

A. Any activity on or use of the City's premises or facilities;
B. Any liability incurred due to Contractor acting outside the scope of its authority pursuant to the Contract, whether or not caused in part by an Indemnified Party;
C. The failure of Contractor or the Work to comply with any Applicable Law, permit or orders;
D. Any misrepresentation, misstatement or omission with respect to any statement made in the Contract Documents or any document furnished by the Contractor in connection therewith;
E. Any breach of any duty, obligation or requirement under the Contract Documents, including, but not limited to any breach of Contractor's warranties, representations or agreements set forth in the Contract Documents;
F. Any failure to coordinate the Work with City's Separate Contractors;
G. Any failure to provide notice to any party as required under the Contract Documents;
H. Any failure to act in such a manner as to protect the Project from loss, cost, expense or liability;
I. Bodily or personal injury, emotional injury, sickness or disease, or death at any time to any persons including without limitation employees of Contractor;
J. Damage or injury to real property or personal property, equipment and materials (including, but without limitation, property under the care and custody of the Contractor or the City) sustained by any person or persons (including, but not limited to, companies, corporations, utility company or property owner, Contractor and its employees or agents, and members of the general public);
K. Any liability imposed by Applicable Law including, but not limited to criminal or civil fines or penalties;
L. Any dangerous, hazardous, unsafe or defective condition of, in or on the Site, of any nature whatsoever, which may exist by reason of any act, omission, neglect, or any use or occupation of the Site by Contractor, its officers, agents, employees, or Subcontractors;
M. Any operation conducted upon or any use or occupation of the Site by Contractor, its officers, agents, employees, or Subcontractors under or pursuant to the provisions of the Contract or otherwise;
N. Any acts, errors, omission or negligence of Contractor, its officers, agents, employees, or Subcontractors;
O. Infringement of any patent rights, licenses, copyrights or intellectual property which may be brought against the Contractor or Owner arising out of Contractor's Work, for which the Contractor is responsible; and
P. Any and all claims against the City seeking compensation for labor performed or materials used or furnished to be used in the Work or alleged to have been furnished on the Project, including all incidental or consequential damages resulting to the City from such claims.

10.2. **Effect of Indemnitees' Active Negligence**. Contractor's obligations to indemnify and hold the Indemnitees harmless **exclude** only such portion of any Indemnity Claim which is attributable to the active negligence or willful misconduct of the Indemnitee, provided such active negligence or willful misconduct is determined by agreement of the parties or by findings of a court of competent jurisdiction. In instances where an Indemnitee's active negligence accounts for only a percentage of the liability for the Indemnity Claim involved, the obligation of Contractor will be for that entire percentage of liability for the Indemnity Claim not attributable to the active negligence or willful misconduct of the Indemnitee(s). Such obligation shall not be construed to negate, abridge or otherwise reduce any other right or obligation of indemnity which would otherwise exist as to any party or person described in this Paragraph 11. Subject to the limits set forth herein, the Contractor, at its own expense, shall satisfy any resulting judgment that may be rendered against any Indemnitee resulting from an Indemnity Claim. The Indemnitees shall be consulted with regard to any proposed settlement.

10.3. **Independent Defense Obligation.** The duty of the Contractor to indemnify and hold harmless the Indemnitees includes the separate and independent duty to defend the Indemnitees, which duty arises immediately upon receipt by Contractor of the tender of any Indemnity Claim from an Indemnitee. The Contractor's obligation to defend the Indemnitee(s) shall be at Contractor's sole expense, and not be excused because of the Contractor's inability to evaluate liability or because the Contractor evaluates liability and determines that the Contractor is not liable. This duty to defend shall apply whether or not an Indemnity Claim has merit or is meritless, or which involves claims or allegations that any or all of the Indemnitees were actively, passively, or concurrently negligent, or which otherwise asserts that the Indemnitees are responsible, in whole or in part, for any Indemnity Claim. The Contractor shall respond within thirty (30) Calendar Days to the tender of any Indemnity Claim for defense and/or indemnity by an Indemnitee, unless the Indemnitee agrees in writing to an extension of this time. The defense provided to the Indemnitees by Contractor shall be by well qualified, adequately insured and experienced legal counsel acceptable to the City.

10.4. **Intent of Parties Regarding Scope of Indemnity.** It is the intent of the parties that the Contractor and its Subcontractors of all tiers shall provide the Indemnitees with the broadest defense and indemnity permitted by Applicable Law. In the event that any of the defense, indemnity or hold harmless provisions in the Contract Documents are found to be ambiguous, or in conflict with one another, it is the parties' intent that the broadest and most expansive interpretation in favor of providing defense and/or indemnity to the Indemnitees be given effect.

10.5. **Waiver of Indemnity Rights Against Indemnitees.** With respect to third party claims against the Contractor, to the fullest extent permitted by law, the Contractor waives any and all rights to any type of express or implied indemnity against the Indemnitees.

10.6. **Subcontractor Requirements.** In addition to the requirements set forth hereinabove, Contractor shall ensure, by written subcontract agreement, that each of Contractor's Subcontractors of every tier shall protect, defend, indemnify and hold harmless the Indemnitees with respect to Indemnity Claims arising out of, in connection with, or in any way related to each such Subcontractors' Work on the Project in the same manner in which Contractor is required to protect, defend, indemnify and hold the Indemnitees harmless. In the event Contractor fails to obtain such defense and indemnity obligations from others as required herein, Contractor agrees to be fully responsible to the Indemnitees according to the terms of this Paragraph 11.

10.7. **No Limitation or Waiver of Rights.** Contractor's obligations under this Paragraph 11 are in addition to any other rights or remedies which the Indemnitees may have under the law or under the Contract Documents. Contractor's indemnification and defense obligations set forth in

this Paragraph 11 are separate and independent from the insurance provisions set forth in the Contract Documents, and do not limit, in any way, the applicability, scope, or obligations set forth in such insurance provisions. The purchase of insurance by the Contractor with respect to the obligations required herein shall in no event be construed as fulfillment or discharge of such obligations. In any and all claims against the Indemnitees by any employee of the Contractor, any Subcontractor, any supplier of the Contractor or Subcontractors, anyone directly or indirectly employed by any of them, or anyone for whose acts any of them may be liable, the obligations under this Paragraph 11 shall not be limited in any way by any limitation on the amount or type of damages, compensation or benefits payable by or for the Contractor or any Subcontractor or any supplier of either of them, under workers' or workmen's compensation acts, disability benefit acts or other employee benefit acts. Failure of the City to monitor compliance with these requirements imposes no additional obligations on the City and will in no way act as a waiver of any rights hereunder.

10.8. **Withholding to Secure Obligations.** In the event an Indemnity Claim arises prior to final payment to Contractor, the City may, in its sole discretion, reserve, retain or apply any monies due Contractor for the purpose of resolving such Indemnity Claims; provided, however, the City may release such funds if the Contractor provides the City with reasonable assurances of protection of the Indemnitees' interests. The City shall, in its sole discretion, determine whether such assurances are reasonable.

10.9. **Survival of Indemnity Obligations.** Contractor's obligations under this Paragraph 11 are binding on Contractor's and its Subcontractors' successors, heirs and assigns and shall survive the completion of the Work or termination of the Contractor's performance of the Work.

11. SUCCESSORS AND ASSIGNS. The Parties bind themselves, their heirs, executors, administrators, successors and assigns the covenants, agreements, and obligations contained in the Contract Documents. The Contractor shall not, either voluntarily or by action of law, assign any right or obligation of the Contractor under the Contract Documents without prior written consent of the City.

(SIGNATURE PAGE FOLLOWS)

CITY OF MORENO VALLEY, Municipal Corporation

BY:_____
Mayor/City Manager *(Select only one)*

DATE:_____

(Name of Contractor)

License No./
Classification:_____

Expiration Date:_____

Federal I.D. No.:_____

PRINT NAME:_____

SIGNATURE:_____

TITLE:_____

DATE:_____

PRINT NAME:_____

SIGNATURE:_____

TITLE:_____

DATE:_____

INTERNAL USE ONLY

ATTEST:

_____
City Clerk
(only needed if Mayor signs)

APPROVED AS TO LEGAL FORM:

_____
City Attorney

_____
Date

RECOMMENDED FOR APPROVAL:

_____
Public Works Director/City Engineer
(if contract exceeds $15,000)

_____
Date

SIGNING INSTRUCTIONS TO THE CONTRACTOR:

Signature(s) must be accompanied by a completed notary certificate of acknowledgement attached hereto. A general partner must sign on behalf of a partnership. **Two (2)** corporate officers must sign on behalf of a corporation unless the corporation has a corporate resolution that allows one person to sign on behalf of the corporation; if applicable, said resolution must be attached hereto. The corporate seal may be affixed hereto.

CALIFORNIA ALL-PURPOSE CERTIFICATE OF ACKNOWLEDGMENT

SAMPLE

State of California

County of _____

On _____ before me, _____,
(Here insert name and title of the officer)

personally appeared _____,

who proved to me on the basis of satisfactory evidence to be the person(s) whose name(s) is/are subscribed to the within instrument and acknowledgement to me that he/she they executed the same in his/her/their authorized capacity(ies), and that by his/her/their signature(s) on the instrument the person(s), or the entity upon behalf of which the person(s) acted, executed the instrument.

I certify under PENALTY OF PERJURY under the laws of the State of California that the foregoing paragraph is true and correct.

WITNESS my hand and official seal.

_____ (Notary Seal)
Signature of Notary Public

DESCRIPTION OF THE ATTACHED DOCUMENT

AGREEMENT SIGNATURE PAGE
(Title or description of attached document)

_____
(Title or description of attached document continued)

Number of Pages _____

Document Date _____

_____
Additional Information

CAPACITY CLAIMED BY THE SIGNER

- ☐ Individual(s)
- ☐ Corporate Officer

_____
(Title)

- ☐ Partner (s)
- ☐ Attorney-in-Fact
- ☐ Other _____

ADDITIONAL OPTIONAL INFORMATION

INSTRUCTIONS FOR COMPLETING THIS FORM

Any acknowledgment completed in California must contain verbiage exactly as appears above in the notary section or a separate acknowledgment form must be property completed and attached to that document. The only exception is if a document is recorded outside of California. In such instances, any alternative acknowledgment verbiage as may be printed on such a document so long as the verbiage does not require the notary to do something that is illegal for a notary in California (i.e. certifying the authorized capacity of the signer). Please check the document carefully for proper notarial wording and attach this form if required.

- State and County information must be the State and County where the document signer(s) personally appeared before the notary public for acknowledgment.
- Date of notarization must be the date that the signer(s) personally appeared which must also be the same date the acknowledgment is completed.
- The notary public must print his or her name as it appears within his or her commission followed by a comma and then your title (notary public).
- Print the name(s) of document signer(s) who personally appear at the time of notarization.
- Indicate the correct singular or plural forms by crossing off incorrect forms (i.e. ~~he~~/she/~~they~~, is/~~are~~) or circling the correct forms. Failure to correctly indicate this information may lead to rejection of document recording.
- The notary seal impression must be clear and photographically reproducible. Impression must not cover text or lines. If seal impression smudges, re-seal if a sufficient area permits, otherwise complete a different acknowledgment form.
- Signature of the notary public must match the signature on file with the office of the county clerk.
  - Additional information is not required but could help to ensure this acknowledgment is not misused or attached to a different document.
  - Indicate title or type of attached document, number of pages and date.
  - Indicate the capacity claimed by the signer. If the claimed capacity is a corporate officer, indicate the title (i.e. CEO, CFO, Secretary).
- Securely attach this document to the signed document.

CONTRACTOR'S BONDS

PREMIUM $_____

FAITHFUL PERFORMANCE BOND
(100% of Total Contract Price)

PROJECT NO. 801 0024 70 77

PERRIS BOULEVARD WIDENING
from Ironwood Avenue to Manzanita Avenue

KNOW ALL MEN AND WOMEN BY THESE PRESENTS:

THAT WHEREAS, the City Council of the City of Moreno Valley, State of California, known as "City," has awarded to _____, as Principal hereinafter designated as "Contractor" and have entered into an Agreement whereby the Contractor agrees to construct or install and complete certain designated public improvements, which said Agreement, effective on the date signed by the City of Moreno Valley, and identified as **Project No. 801 0024 70 77**, and all Contract Documents are hereby referred to and made a part hereof; and

WHEREAS, said Contractor under the terms of said Contract Documents is required to furnish a bond guaranteeing the faithful performance of said Agreement;

NOW THEREFORE, we the undersigned Contractor and_____, as Surety, are held and firmly bound unto the City of Moreno Valley, County of Riverside in the penal sum of _____ dollars, ($_____), lawful money of the United States, to be paid to the said City or its certain attorney, its successors and assigns; for which payment, well and truly to be made, we bind ourselves, our heirs, executors and administrators, successors and assigns, jointly and severally liable (CCP 995.320 (a)(1)), firmly by these presents.

THE CONDITION OF THIS OBLIGATION IS SUCH, that if the above bound Contractor, his or her or its heirs, executors, administrators, successors or assigns, shall in all things stand to and abide by, and well and truly keep and perform the covenants, conditions and provisions in said Contract Documents and any alterations thereof made as therein provided, on his or her or their part, to be kept and performed at the time and in the manner therein specified, and in all respects according to their true intent and meaning, and shall indemnify and save harmless the City of Moreno Valley, its officers, agents and employees, as therein stipulated, then this obligation shall become null and void; otherwise it shall be and remain in full force and effect. In the event suit is brought upon this bond by the City and judgement is recovered, the Surety shall pay all costs incurred by the City in such suit, including a reasonable attorney fee to be fixed by the court.

Contractor and Surety agree that this Faithful Performance Bond shall not be considered a part of the Agreement between Contractor and the City ("Agreement"). Contractor and Surety further agree that this Faithful Performance Bond is a separate obligation of the Contractor and its Surety, and that any attorneys' fee provision contained in this Faithful Performance Bond shall not apply to the Agreement. In the event there is any litigation between the parties arising from the breach of the Agreement, each party will bear its own attorneys' fees in the litigation.

The Surety hereby stipulates and agrees that no change, extension of time, alteration, or addition to the terms of the Contract Documents or to the Work to be performed thereunder, or the Provisions accompanying the same shall in any way affect its obligations on this bond, and it does hereby waive notice of any such change, extension of time, alteration or addition to the terms of the Contract Documents or to the Work or the Provisions.

(SIGNATURE PAGE FOLLOWS)

BOND NO. _____

IN WITNESS WHEREOF, we have hereunto set our hands, and seals on this _____ day of _____ 20_____.

CONTRACTOR (Principal)

Contractor Name: _____

Address: _____

_____

Telephone No.: _____

Print Name: _____

Signature: _____

Approved as to Form this

_____ day of _____20____

_____
City Attorney
City of Moreno Valley

SURETY

Name: _____

Address: _____

_____

Telephone No.: _____

Print Name: _____
Attorney-in-Fact

Signature: _____

NOTE:

- **The bond shall be executed by a California admitted surety insurer (CCP 995.311).**
- **The bond shall include an attached Notary Certificate for the Attorney-in-Fact.**
- **The bond shall include an attached Notary Certificate for the Bidder.**
- **The bond shall include an attached original Power of Attorney only authorizing the Attorney-in-Fact to act for the Surety.**
- **The bond shall include the address at which the Principal (Bidder) and Surety may be served with notices, papers and other documents.**
- **The Bidder's and Surety's corporate seal may be affixed hereto.**

CALIFORNIA ALL-PURPOSE CERTIFICATE OF ACKNOWLEDGMENT

SAMPLE

State of California
County of _____

On _____ before me, _____,
(Here insert name and title of the officer)

personally appeared _____,

who proved to me on the basis of satisfactory evidence to be the person(s) whose name(s) is/are subscribed to the within instrument and acknowledgement to me that he/she they executed the same in his/her/their authorized capacity(ies), and that by his/her/their signature(s) on the instrument the person(s), or the entity upon behalf of which the person(s) acted, executed the instrument.

I certify under PENALTY OF PERJURY under the laws of the State of California that the foregoing paragraph is true and correct.

WITNESS my hand and official seal.

_____ (Notary Seal)
Signature of Notary Public

DESCRIPTION OF THE ATTACHED DOCUMENT

FAITHFUL PERFORMANCE BOND SIGNATURE PAGE
(Title or description of attached document)

_____
(Title or description of attached document continued)

Number of Pages _____

Document Date _____

_____
Additional Information

CAPACITY CLAIMED BY THE SIGNER

- ☐ Individual(s)
- ☐ Corporate Officer

_____
(Title)

- ☐ Partner (s)
- ☐ Attorney-in-Fact
- ☐ Other _____

ADDITIONAL OPTIONAL INFORMATION

INSTRUCTIONS FOR COMPLETING THIS FORM

Any acknowledgment completed in California must contain verbiage exactly as appears above in the notary section or a separate acknowledgment form must be property completed and attached to that document. The only exception is if a document is recorded outside of California. In such instances, any alternative acknowledgment verbiage as may be printed on such a document so long as the verbiage does not require the notary to do something that is illegal for a notary in California (i.e. certifying the authorized capacity of the signer). Please check the document carefully for proper notarial wording and attach this form if required.

- State and County information must be the State and County where the document signer(s) personally appeared before the notary public for acknowledgment.
- Date of notarization must be the date that the signer(s) personally appeared which must also be the same date the acknowledgment is completed.
- The notary public must print his or her name as it appears within his or her commission followed by a comma and then your title (notary public).
- Print the name(s) of document signer(s) who personally appear at the time of notarization.
- Indicate the correct singular or plural forms by crossing off incorrect forms (i.e. ~~he~~/she/~~they~~, is/~~are~~) or circling the correct forms. Failure to correctly indicate this information may lead to rejection of document recording.
- The notary seal impression must be clear and photographically reproducible. Impression must not cover text or lines. If seal impression smudges, re-seal if a sufficient area permits, otherwise complete a different acknowledgment form.
- Signature of the notary public must match the signature on file with the office of the county clerk.
  - Additional information is not required but could help to ensure this acknowledgment is not misused or attached to a different document.
  - Indicate title or type of attached document, number of pages and date.
  - Indicate the capacity claimed by the signer. If the claimed capacity is a corporate officer, indicate the title (i.e. CEO, CFO, Secretary).
- Securely attach this document to the signed document.

BOND NO._____

PREMIUM $_____

LABOR AND MATERIALS PAYMENT BOND
(100% of Total Contract Amount)

PROJECT NO. 801 0024 70 77

PERRIS BOULEVARD WIDENING
from Ironwood Avenue to Manzanita Avenue

KNOW ALL MEN AND WOMEN BY THESE PRESENTS

THAT WHEREAS, the City Council of the City of Moreno Valley, State of California, known as "City", has awarded to _____, as Principal hereinafter designated as "Contractor" and have entered into an Agreement whereby the Contractor agrees to construct or install and complete certain designated public improvements, which said Agreement, effective on the date signed by the City of Moreno Valley, and identified as **Project No. 801 0024 70 77**, and Contract Documents are hereby referred to and made a part hereof; and

WHEREAS, said Contractor under the terms of said Contract Documents is required to furnish a bond to secure the payment of claims of laborers, mechanics, materialmen, and other persons, as provided by law;

NOW, THEREFORE, we the undersigned Contractor and _____, as Surety are held and firmly bound unto the City of Moreno Valley, County of Riverside, in the penal sum of _____dollars, ($_____), lawful money of the United States, for which payment, well and truly to be made, we bind ourselves, our heirs, executors and administrators, successors and assigns, jointly and severally liable (CCP 995.320 (a)(1)), firmly by these presents.

THE CONDITION OF THIS OBLIGATION IS SUCH, that if said Contractor, his or her or its heirs, executors, administrator, successors or assigns, or subcontractors, shall fail to pay any of the persons described in the State of California Civil Code, Section 3181, or amounts due under the Unemployment Insurance Code with respect to work or labor performed by any such claimant, or any amounts required to be deducted, withheld, and paid over to the Franchise Tax Board from the wages of employees of the Contractor and his or her subcontractors, pursuant to Section 13020, of the Unemployment Insurance Code, with respect to such work and labor, that the Surety or Sureties herein will pay for the same in an amount not exceeding the sum specified in this bond, otherwise the above obligation shall be void. In the event suit is brought upon this bond by the City or other person entitled to bring such an action and judgment is recovered, the Surety shall pay all costs incurred by the City in such suit, including a reasonable attorney fee to be fixed by the court.

Contractor and Surety agree that this Labor and Materials Payment Bond shall not be considered a part of the Agreement between Contractor and the City ("Agreement"). Contractor and Surety further agree that this Labor and Materials Payment Bond is a separate obligation of the Contractor and its Surety, and that any attorneys' fee provision contained in this Labor and Materials Payment Bond shall not apply to the Agreement. In the event there is any litigation between the parties arising from the breach of the Agreement, each party will bear its own attorneys' fees in the litigation.

This bond shall inure to the benefit of any of the persons described in the State of California Civil Code Section 3181, to give a right of action to such persons or their assigns in any suit brought upon this bond.

(SIGNATURE PAGE FOLLOWS)

BOND NO. _____

IN WITNESS WHEREOF, we have hereunto set our hands, and seals on this _____ day of _____ 20____.

CONTRACTOR (Principal)	SURETY
Contractor Name: _____	Name: _____
Address: _____	Address: _____
_____	_____
Telephone No.: _____	Telephone No.: _____
Print Name: _____	Print Name: _____ Attorney-in-Fact
Signature: _____	Signature: _____

Approved as to Form this

_____ day of _____20____

_____
City Attorney
City of Moreno Valley

NOTE:

- **The bond shall be executed by a California admitted surety insurer (CCP 995.311).**
- **The bond shall include an attached Notary Certificate for the Attorney-in-Fact.**
- **The bond shall include an attached Notary Certificate for the Bidder.**
- **The bond shall include an attached original Power of Attorney only authorizing the Attorney-in-Fact to act for the Surety.**
- **The bond shall include the address at which the Principal (Bidder) and Surety may be served with notices, papers and other documents.**
- **The Bidder's and Surety's corporate seal may be affixed hereto.**

CALIFORNIA ALL-PURPOSE CERTIFICATE OF ACKNOWLEDGMENT

SAMPLE

State of California

County of _____

On _____ before me, _____,
(Here insert name and title of the officer)

personally appeared _____,

who proved to me on the basis of satisfactory evidence to be the person(s) whose name(s) is/are subscribed to the within instrument and acknowledgement to me that he/she they executed the same in his/her/their authorized capacity(ies), and that by his/her/their signature(s) on the instrument the person(s), or the entity upon behalf of which the person(s) acted, executed the instrument.

I certify under PENALTY OF PERJURY under the laws of the State of California that the foregoing paragraph is true and correct.

WITNESS my hand and official seal.

_____ (Notary Seal)
Signature of Notary Public

DESCRIPTION OF THE ATTACHED DOCUMENT

LABOR AND MATERIALS PAYMENT BOND SIGNATURE PAGE
(Title or description of attached document)

_____
(Title or description of attached document continued)

Number of Pages _____

Document Date _____

_____
Additional Information

CAPACITY CLAIMED BY THE SIGNER

- ☐ Individual(s)
- ☐ Corporate Officer

_____
(Title)

- ☐ Partner (s)
- ☐ Attorney-in-Fact
- ☐ Other _____

ADDITIONAL OPTIONAL INFORMATION

INSTRUCTIONS FOR COMPLETING THIS FORM

Any acknowledgment completed in California must contain verbiage exactly as appears above in the notary section or a separate acknowledgment form must be property completed and attached to that document. The only exception is if a document is recorded outside of California. In such instances, any alternative acknowledgment verbiage as may be printed on such a document so long as the verbiage does not require the notary to do something that is illegal for a notary in California (i.e. certifying the authorized capacity of the signer). Please check the document carefully for proper notarial wording and attach this form if required.

- State and County information must be the State and County where the document signer(s) personally appeared before the notary public for acknowledgment.
- Date of notarization must be the date that the signer(s) personally appeared which must also be the same date the acknowledgment is completed.
- The notary public must print his or her name as it appears within his or her commission followed by a comma and then your title (notary public).
- Print the name(s) of document signer(s) who personally appear at the time of notarization.
- Indicate the correct singular or plural forms by crossing off incorrect forms (i.e. ~~he~~/she/~~they~~, is/~~are~~) or circling the correct forms. Failure to correctly indicate this information may lead to rejection of document recording.
- The notary seal impression must be clear and photographically reproducible. Impression must not cover text or lines. If seal impression smudges, re-seal if a sufficient area permits, otherwise complete a different acknowledgment form.
- Signature of the notary public must match the signature on file with the office of the county clerk.
  - ❖ Additional information is not required but could help to ensure this acknowledgment is not misused or attached to a different document.
  - ❖ Indicate title or type of attached document, number of pages and date.
  - ❖ Indicate the capacity claimed by the signer. If the claimed capacity is a corporate officer, indicate the title (i.e. CEO, CFO, Secretary).
- Securely attach this document to the signed document.

CITY SPECIAL PROVISIONS

CITY SPECIAL PROVISIONS

PART 1
GENERAL PROVISIONS

SECTION 1 – TERMS, DEFINITIONS, ABBREVIATIONS, UNITS OF MEASURE, AND SYMBOLS

1-1.1 GENERAL

The Work shall be performed in accordance with the City Special Provisions which amend, modify, and/or supplement Sections 1 through 600 of the Standard Specifications for Public Works Construction ("Greenbook") current edition.

1-2 TERMS AND DEFINITIONS

Add the following:

WORD or WORDS	DEFINITION
Admitted	Entitled to transact insurance business in California (CCP995.120).
Agency	The City of Moreno Valley.
Alternate Bid, Alternate Bid Price	The amount stated in the Bid for which the Bidder offers to perform the Work described in the Bidding Documents as Alternate Work, to be added or deducted from the Base Bid, which shall be the Contractor's responsibility if the City accepts the Alternate Bid Item.
Applicable Law	All state, federal, and local laws, statutes, ordinances, codes, rules, and regulations governing the Work.
Base Bid, Base Bid Price	The amount stated in the Bid for which the Bidder offers to perform the Work described in the Bidding Documents as the base Contract Work (i.e. not including Alternate Bid Items).
Bidding Documents	The proposed Contract Documents and Bidding Requirements prepared by the City for bidding.
Bidding Requirements	The Notice Inviting Bids, Instructions to Bidders, Bidder's Proposal, Subcontractor Listing, Bidder's Bond, and Contractor's Statement.
Bid Item	An item of Work listed on the Bid Schedule.
Board	The City Council of the City of Moreno Valley, which is the awarding authority of the City.

WORD or WORDS	DEFINITION
CA Building Code	The latest edition adopted by the City of Moreno Valley of the CALIFORNIA BUILDING CODE, as published by the International Conference of Building Officials, 5360 South Workman Mill Road, Whittier, California 90601. Builders Books, Inc., 7943 Canoga Avenue, Canoga Park, California 91304, Telephone 1-800-273-7375. The City does not endorse any bookstore, but has provided a source where the information may be obtained.
CA Electrical Code	The latest edition adopted by the City of Moreno Valley of the CALIFORNIA ELECTRICAL CODE BASED ON THE 2005 NATIONAL ELECTRICAL CODE as developed by the National Fire Protection Association, 1 Batterymarch Park, P.O. Box 9101, Quincy, MA 02269-9101.
CA Fire Code	The latest edition adopted by the City of Moreno Valley of the CALIFORNIA FIRE CODE, as published by the International Conference of Building Officials, 5360 South Workman Mill Road, Whittier, California 90601, and Western Fire Chiefs Association, Palm Brook Corporate Center, 3602 Inland Empire Boulevard, Suite B-205, Ontario, California 90601.
CA Mechanical Code	The latest edition adopted by the City of Moreno Valley of the CALIFORNIA MECHANICAL CODE, as published by the International Association of Plumbing and Mechanical Officials.
CA Plumbing Code	The latest edition adopted by the City of Moreno Valley of the CALIFORNIA PLUMBING CODE, as published by the International Association of Plumbing and Mechanical Officials.
Calendar Day	24 hours beginning at 12 midnight and ending at 11:59 p.m.
Change Order	A written instrument prepared by the City and signed by the City and Contractor, stating their agreement upon all of the following: (1) the scope of the change in the Work; (2) the amount of the adjustment, if any, in the Contract Price; and (3) the extent of the adjustment, if any, in the Contract Time. See Section 3-2.1.1 of the City Special Provisions.
Change Order Proposal Request	A request issued by the City to the Contractor that describes a proposed change to the Work and requests that the Contractor submit an itemized Change Order Proposal to the City. See Section 3-2.1 of the City Special Provisions.
City	The City of Moreno Valley.
City Council	The City Council of the City of Moreno Valley.

WORD or WORDS	DEFINITION
City Special Provisions	Provisions of the City that amend, modify, and/or supplement Sections 1 through 600 of the Standard Specifications for Public Works Construction ("Greenbook") current edition.
Construction Change Directive	A written order prepared and signed by the City, directing a change in the Work prior to Contractor's agreement on adjustment, if any, in the Contract Price or Contract Time, or both. See Section 3-2.1.2 of the City Special Provisions.
Contract Documents	The Contract Documents are enumerated in the Agreement.
Contract Time	The number of Working Days stated in the Agreement for the completion of the Work.
Contractor's Representative	See Section 7-6.
Detour	A temporary route for traffic (vehicular or pedestrian) around a closed portion of a road or travelway.
District	The Riverside County Flood Control & Water Conservation District (RCFC&WCD)
Drawings or Plans	The part of the Contract Documents which show the characteristics and scope of the Work to be performed, and which have been prepared or approved by the Engineer.
Engineer or City Engineer	The City Engineer of the City of Moreno Valley or other person designated by the City Engineer acting either directly or through authorized agents.
Estimated Quantities	The quantities Work anticipated to be performed, as set forth in the Bid Schedule, designated as units or a lump sum.
Excavation	Any operation in which earth, rock, or other material in the ground is moved, removed, or otherwise displaced by means of tools, equipment, or explosives in any of the following ways: grading, trenching, digging, ditching, drilling, augering, tunneling, scraping, cable or pipe plowing and driving, or any other way (CGC 4216).
Field Order	A written order effecting a change in the Work not involving an adjustment in the Contract Price or an extension of the Contract Time, issued by the Engineer to the Contractor during construction.

WORD or WORDS	DEFINITION
Final Acceptance	Final Acceptance of the Work occurs when the Engineer determines that Final Completion (as defined in Section 9-3.1) of the Work has been achieved and a Notice of Completion has been recorded with the County of Riverside by the City. The date of Final Acceptance is the date the Notice of Completion is recorded by the County of Riverside Recorder.
Final Completion	See Section 9-3.1 for the steps (1 and 2) necessary to achieve Final Completion.
Furlough Day	A day on which the City is closed for business for budget reasons. A Furlough Day may be a Working Day.
Geotechnical and/or Soils Engineer	The private consulting geotechnical engineer retained to perform soils material testing.
Hazardous Material	(1) A substance or combination of substances, which because of its quantity, concentration, or physical, chemical or infectious characteristics, may either: (a) Cause, or significantly contribute to an increase in mortality or an increase in serious irreversible or incapacitating reversible illness; or (b) Pose a substantial present or potential hazard to human health or environment when improperly treated, stored, transported or disposed of or otherwise managed. (2) Unless expressly provided otherwise, the term "hazardous material" shall be understood to also include extremely hazardous material.
Inspector	The representative of the Engineer who is assigned to inspect conformance of the work to the Plans and Specifications.
Laboratory	The designated laboratory authorized by the City to test materials and/or Work.
Labor Surcharge and Equipment Rental Rates	The latest edition in effect on the date the Work is performed. Published by the California Department of Transportation, Caltrans Publications, 1900 Royal Oaks Drive, Sacramento, California 95815.
Major Contract Bid Item	A Bid Item for which the Total Price is 10% or more of the Contract Price.
Manufacturer	A person, firm or corporation that fabricates, processes, or creates materials or equipment to be incorporated into the Project from raw materials or component parts.

WORD or WORDS	DEFINITION
Minor Contract Bid Item	A Bid Item for which the Total Price is less than 10% of the Contract Price.
Notice of Completion	A notice executed by the Engineer and recorded with the County of Riverside Recorder that provides formal notice of the completion of Work and Final Acceptance of the work by the City. The Notice of Completion contains the name and address of the City, name, and address of the Contractor, description of the site sufficient for identification, including the street address of the site, if any, and date of Final Completion. The date of Final Acceptance is the date the Notice of Completion is recorded by the County of Riverside Recorder.
Notice to Proceed or Notice to Proceed with Construction	A written notice issued by the City to the Contractor that authorizes the Contractor to perform the Work.
Notice to Proceed to Fulfill Preconstruction Requirements and/or Order of Materials	A written notice issued by the City to the Contractor that authorizes the Contractor to proceed with preconstruction requirements and the acquisition or purchase of materials that are to be incorporated into the Work and establishes the date of commencement of the Contract Time.
Owner	City of Moreno Valley unless otherwise specified.
Private Architect or Engineer	(If applicable) The private professional architect or consulting engineer who has prepared and signed the Plans.
Project	The total construction of which the Work performed under the Contract Documents may be the whole or a part and which may include construction by other contractors and the City's own forces.
Punch List	A list of items of Work to be completed or corrected by the Contractor in order to complete the Work as specified in the Contract Documents.
Registered Bidder	A Bidder that registers with the City by providing its street address, e-mail, phone, and fax to the City at the time of pick-up of or request for Bidding Documents.
Reference Documents	Drawings and documents showing existing site conditions or as-built improvements and made available to Bidders for general background information about the Project. No guarantee is made that existing improvements or site conditions are accurately shown or described on the Reference Documents.

WORD or WORDS	DEFINITION
Reference Specification	Any specifications referred to in the Bidding Documents other than Standard Specifications and City Special Provisions, including, but not limited to bulletins, standards, rules, methods of analysis or tests, codes, State Standard Specifications, and specifications of other agencies, engineering societies, or industrial associations. These refer to the latest edition, including amendments, in effect and published at the Bid Deadline, unless otherwise specifically referred to by edition, volume, or date.
Shop Drawings	All drawings, diagrams, illustrations, brochures, schedules and other data which are prepared by the Contractor, a Subcontractor, manufacturer, supplier, or distributor, which illustrate how specific portions of the Work shall be fabricated or installed.
Specifications	Standard Specifications, Reference Specifications, City Special Provisions, and specifications in Addenda and Contract Change Orders. These refer to the latest edition, including amendments, in effect and published at the Bid Deadline unless otherwise specifically referred to by edition, volume, or date.
Standard Plans	Standard detail drawings and/or instructions of the Engineering Division of the Public Works Department of the City of Moreno Valley. Also referred to as Standard Drawings.
Standard Specifications	The latest edition of the "GREENBOOK," STANDARD SPECIFICATIONS FOR PUBLIC WORKS CONSTRUCTION, including all SUPPLEMENTAL AMENDMENTS, in effect and published at the Bid Deadline, otherwise specifically referred to by edition, volume, or date, prepared by Public Works Standards, Inc., as published by Building News, Inc., 1612 South Clementine Street, Anaheim, California 92802. Telephone No. 714.517.0970.
State	The State of California
State Standard Plans	The latest edition of the Standard Plans of the State of California, Department of Transportation, including amendments, in effect and published at the Bid Deadline, unless otherwise specifically referred to by edition, volume, or date.
State Standard Specifications	The latest edition of the Standard Specifications of the State of California, Department of Transportation, in effect and published at the Bid Deadline, unless otherwise specifically referred to by edition, volume, or date.
Supplier	Any person or organization who supplies materials or equipment for the Work, including that fabricated to a special design, but who does not perform labor at the site.

WORD or WORDS	DEFINITION
Technical Provisions	Part of the City Special Provisions consisting of a written description of a technical nature of materials, equipment, construction system, standards, and workmanship, which amend, modify, or supplement Parts 2 through 6 (Sections 200 through 600 inclusive) of the latest edition of the "Greenbook," Standard Specifications for Public Works Construction (including all supplement amendments, and other agency or utility specifications.
Transportation Division	A division within the City of Moreno Valley Department of Public Works that is assigned traffic-related matters.
Traffic Engineer	The representative of the Engineer who is assigned traffic-related matters.
Work	The construction and services required by the Contract Documents, whether completed or partially completed, and includes all other labor, materials, equipment, services provided or to be provided by the Contractor to fulfill the Contractor's obligations.
Work Directive	A unilateral written order issued by the City directing Contractor to continue performance of the Work or a disputed item of Work pending resolution of a claim or dispute concerning the scope of Work.
Working Days	See Section 6-7.2.
Written Notice	A notice in writing required under the Contract Documents. Written Notice is deemed delivered and the service thereof completed, when: (1) posted by certified or registered U.S. Mail, return receipt requested, to the appropriate party at its last given address, or (2) delivered in person to said party or its authorized representative at the worksite.

1-3 ABBREVIATIONS

1-3.2 Common Usage

Add the following to Section 1-3.2:

Abbreviation	Word or Words
ADA	Americans with Disabilities Act
AWG	American Wire Gage
B&P	Business and Professions Code
CA	California Administration Code
CA MUTCD	California Manual on Uniform Traffic Control Devices
CBC	California Building Code as amended by Title 8 of the City's Municipal Code
CC	Civil Code Section No.
CGC	California Government Code

CCP	California Code of Civil Procedure Section No.
CVC	California Vehicle Code
DBE	Disadvantaged Business Enterprise
EDC	Educational Code Section No.
IC	California Insurance Code Section No.
LC	Labor Code Section No.
MOU	Memorandum of Understanding – Riverside County Transportation Department and Riverside County Flood Control and Water Conservation District for Design, Construction, Inspection and Maintenance of Flood Control Drainage Facilities (June 2008)
NEC	National Electrical Code
PCC	Public Contract Code
PS & E	Plans Specifications and Estimates
RFI	Request for Information

1-3.3 Institutions

Add the following to Section 1-3.3:

Abbreviation	Word or Words
AAN	American Association of Nurserymen
ACI	American Concrete Institute
AGA	American Gas Association
AI	The Asphalt Institute
AIA	American Institute of Architects
AIEE	American Institute of Electrical Engineers
AISI	American Iron & Steel Institute
ANSI	United States of America Standards Institute
APHA	American Public Health Association
APWA	American Public Works Association
ASA	American Standards Association (now ANSI)
ASCE	American Society of Civil Engineers
ASHRAE	American Society of Heating, Refrigerating, and Air Conditioning Engineers
ASME	American Society of Mechanical Engineers
CRSI	Concrete Reinforcing Steel Institute
CSD	Community Services District of the City of Moreno Valley
EIA	Electronic Industries Association
EMWD	Eastern Municipal Water District
IEEE	Institute of Electrical and Electronics Engineers
MVHA	Moreno Valley Housing Authority
NBFU	National Board of Fire Underwriters
OSA	Office of State Architect
PCA	Portland Cement Association
RCFC & WCD	Riverside County Flood Control and Water Conservation District
RCTC	Riverside County Transportation Commission
RTA	Riverside Transportation Authority
SSPC	Steel Structures Painting Council
USASI or USAS	United States of America Standards Institute (Now ANSI)
WMWD	Western Municipal Water District
WRCOG	Western Riverside Council of Governments

1-4.2 Units of Measure and Their Abbreviations
Add the following to Section 1-4.2:

1 Acre	43,560 sf
Cubic Yards	CY
Each	EA
Feet	FT
Linear Feet	LF
Lump Sum	LS
Square Feet	SF
Square Yards	SY
Ton	TN

SECTION 2 – SCOPE AND CONTROL OF WORK

2-1 AWARD AND EXECUTION OF CONTRACT

Delete Section 2-1 in its entirety. See the Instructions to Bidders.

2-2 ASSIGNMENT

2-2.1 Contractor Indebtedness. Indebtedness incurred by or on behalf of the Contractor for any reason in connection with the Work must be paid by the Contractor. The City, the Moreno Valley Housing Authority (MVHA), and the Moreno Valley Community Services District (CSD) have no obligation for any indebtedness or claim other than payments under terms of the Contract, and the Contractor shall not represent that it has any authority to create such an obligation on behalf of the City of Moreno Valley, the MVHA, or the CSD . The Contractor shall indemnify and hold harmless the City of Moreno Valley, the MVHA, and the CSD, its officers, employees and agents from any loss, demand, damages, claims or actions arising from or in connection with said indebtedness.

2-3 SUBCONTRACTS

2-3.1 General

Add the following at the end of Section 2-3.1:

Pursuant to Labor Code Section 1777.1, the Labor Commissioner publishes and distributes a list of contractors ineligible to perform work as a subcontractor on a public works project. This list of debarred contractors is available from the Department of Industrial Relations website at http://www.dir.ca.gov/dir/Labor_law/DLSE/Debar.html.

All subcontracts shall include a provision that requires each Subcontractor, to the extent of the Work to be performed by the Subcontractor, to be bound to the Contractor by the terms of the Contract Documents, and to assume toward the Contractor all of the obligations and responsibilities that the Contractor assumes toward the City. Each subcontract agreement shall preserve and protect the rights of the City under the Contract Documents with respect to the Work to be performed by the Subcontractor so that subcontracting thereof will not prejudice such rights, and shall allow to the Subcontractor, unless specifically provided otherwise in the subcontract agreement, the benefit of all rights, remedies and redress against the Contractor that the Contractor, by the Contract Documents, has against the City. Where appropriate, the Contractor shall require each Subcontractor to enter into similar agreements with Sub-subcontractors. The Contractor shall

make available to each proposed Subcontractor, prior to the execution of the subcontract agreement, copies of the Contract Documents to which the Subcontractor shall be bound by this **Section 2-3.1**. If any provision of any subcontract is inconsistent with any provision of the Contract Documents or the intent of the Contract Documents, then the Contract Documents shall control.

Subcontracts shall also contain certification by the Subcontractor that said Subcontractor is experienced in and qualified to do, and knowledgeable about, the subcontracted Work. Copies of subcontracts shall be provided to the Engineer upon request.

2-3.2 Self Performance
Add the following at the end of Section 2-3.2:

Any Bid that does not indicate that Work valued at least fifty percent (50%) of the Contract Price (except Specialty Items) will be performed by the Bidder's own forces, will be considered non-responsive and will be rejected with no further consideration. If, after execution of the Agreement, the City discovers the Contractor is performing Work valued at less than fifty percent (50%) of the Contract Price (except Specialty Items), the Contractor will be notified that it is in breach of the Contract. The Contractor's obligation to self-perform at least fifty percent (50%) of the Contract Price (except Specialty Items) is not subject to Change Orders that increase the value of subcontracted items of Work.

2-3.3 Status of Subcontractors
Add the following at the end of Section 2-3.3:

The Contractor shall be as fully responsible to the City for the acts and omissions of Subcontractors and of persons employed by them as the Contractor is for the acts and omissions of persons directly employed by the Contractor. The Contractor shall be responsible for the coordination of the trades, Subcontractors, and material suppliers engaged upon their Work. Neither the City nor any representative of the City will undertake to settle any difference between the Contractor and Subcontractors or between Subcontractors.

2-4 CONTRACT BONDS
Delete Section 2-4 in its entirety. See Paragraph 8 of the Agreement.

2-5 PLANS AND SPECIFICATIONS

2-5.1.1 Standard Specifications
Add the following at the end of Section 2-5.1.1:

Except as otherwise specified on the Plans or in these City Special Provisions, all Work shall be in accordance with the Standard Specifications. Any reference to "Section" or "Subsection" in these City Special Provisions shall refer to said Standard Specifications unless noted otherwise.

2-5.2 Precedence of Contract Documents
Delete Section 2-5.2 in its entirety. See Paragraph 1 of the Agreement.

2-5.2.1 Traffic Signal Work
Add the following at the end of Section 2-5.2.1:

Except as otherwise specified in the City Special Provisions or on the Plans, all Work relating to traffic signals and incidental illuminated street name signs and safety lighting, including all equipment, materials, components, and the installation thereof, shall be in accordance with the City's Technical Provisions for traffic signals, latest edition of the State Standard Plans and Section 86 "Signals, Lighting and Electrical Systems" of the latest edition of the State Standard Specifications. With respect to traffic signal Work, the order of precedence, from highest to lowest, shall be: City Special Provisions, Plans, Section 86 of the State Standard Specifications, State Standard Plans, Standard Plans, and Standard Specifications.

2-5.3 Submittals

2-5.3.1 General

Add the following at the end of Section 2-5.3.1:

As specified in Section 5 of the Agreement, the Contractor shall, at its own expense, transmit to the Engineer for review and acceptance, working drawings, shop drawings, supporting information, and/or other available instructive and descriptive information from the manufacturer, when and as required by the Plans or City Special Provisions or requested by the Engineer. Shop drawings will not be required for standard items in common use for which adequate manufacturers' literature is available unless otherwise required by the Engineer.

The Contractor shall consecutively number, thoroughly check, approve and sign each submittal and transmit the submittals to the Engineer for review. In the event that certain submittals are submitted without the Contractor's approval signature or are unacceptable to the City, they shall be rejected by the Engineer. The Contractor shall thereafter correct said submittals and resubmit.

In the event that in the process of development of the submittals it is discovered that there are defects and/or errors on the Plans that result in conflict between said Plans and the submittals, or if the submittals show variation from the Plans or other Contract Documents because of standard shop practice or other reasons, the Contractor shall thoroughly describe and explain said defects and/or conflicts in his or her transmittal letter to the Engineer.

The Engineer's review of the submittals will be for general design and arrangement only, and shall not relieve the Contractor from responsibility for errors of any sort in the submittals or of the responsibility for executing the work in accordance with the Contract Documents. The Contractor shall be solely responsible for the correctness of the submittals, for shop fits and field connections, and for the results obtained by use of such submittals. The Contractor shall verify and be fully responsible for all dimensions and job-site conditions affecting the Work and shall be responsible for furnishing and installing the proper materials required by the Contract Documents.

The Contract Time will not be extended due to the failure of the Contractor to provide submittals as required by the Contract Documents in a timely manner.

2-9 SURVEYING

2-9.2 Survey Service

Add the following at the end of Section 2-9.2:

The Contractor shall preserve bench marks, survey monuments, survey stakes and points set for lines, grades or measurements of Work in their proper places unless removal is authorized by the Engineer. The City shall bear the cost of one (1) set of construction stakes and shall give a

copy of the cut sheets to the Contractor. The cost of restaking due to the negligence of the Contractor will be deducted from the Contract Price via Change Order.

The cost of rework surveying, overtime, travel and other related costs incurred by the City will be deducted from the Contractor's progress payments.

2-11 INSPECTION

Add the following at the end of Section 2-11:

Should the Contractor elect to continue construction after a Stop Work Notice is issued, the City shall reject all work completed after the Stop Work Noticed issuance and the City will not be responsible for payment of the work; and/or the City shall require the Contractor to remove and replace all work completed, fully at the Contractor's cost after the Stop Work Notice issuance.

Inspection of the Work shall not relieve the Contractor of any of his obligations to fulfill the Contract. The Engineer shall have authority to stop Work whenever provisions of Contract Documents are not being complied with and such noncompliance is discovered. Contractor shall remedy defective Work and the City may reject unsuitable materials, even if such defective Work or materials have been previously approved by the Engineer or included in the quantities for progress payments. The Inspector cannot authorize deviations from the Plans and Specifications, and does not have the authority to obligate the City financially.

If any Work is concealed or performed without the requisite inspection notice, then the Work shall be subject to such tests or exposure as may be necessary to prove to the Engineer that the materials used and the Work performed are in conformity with the Plans and Specifications, or said materials or Work may be removed and installed or performed again at the discretion of the City Engineer. All labor, equipment, and materials necessary for exposing, testing, or complete removal, and installation or replacement shall be furnished by the Contractor at its own expense. The Contractor shall replace, at its own expense, any materials or Work damaged by exposure or testing.

Cost of rework inspection incurred by the City will be deducted from the Contract Price via Change Order. Rework inspection cost is as follows:

1. Contractor's failure to complete the Work within the Contract Time, including any previously authorized extensions thereof.
2. Extra inspections required for Contractor's correction of defective Work.
3. Overtime costs for acceleration of work done for Contractor's convenience.
4. All associated costs including travel.

SECTION 3 – CHANGES IN WORK

3-1 CHANGES REQUESTED BY THE CONTRACTOR

3-1.1 General

Add the following at the end of Section 3-1.1:

If the Contractor alleges that instructions issued after the date of the Contract will result in increases to the Contract Price or Contract Time, if latent or unforeseen conditions require modification of the Contract Documents, or the Contractor otherwise becomes aware of the need for or desirability of a change in the Work, a Change Order Proposal ("COP") may be submitted to the City in writing, using the forms provided herein in Section 3-6.2, and must specify the reasons for such change, including relevant circumstances and impacts on the construction schedule. The Contractor may request additional compensation and/or time through a COP but not for instances that occurred more than **ten (10) Calendar Days** prior to the COP. Contractor's failure to initiate a COP within such period shall be deemed a waiver of the right to adjustment of the Contract Price or the Contract Time for the alleged change. Any COP that is approved by the City will be incorporated in a Change Order or Construction Change Directive. If the City determines that the Work in question is not a change, the Owner shall issue a Work Directive, ordering the Contractor to proceed with the Work without delay. If the COP is denied but the Contractor believes that it does have merit, the Contractor may submit a claim to the City.

3-2 CHANGES INITIATED BY THE AGENCY

3-2.1 General

Add the following at the end of Section 3-2.1:

The City reserves the right to make changes in the Work, including the elimination of any Bid Item, after execution of the Contract and without invalidating the Contract by:

A. Change Order approved by the City Council, City Manager, Public Works Director, or City Engineer (dollar value of approval authority for each as per City policy); or

B. Construction Change Directive approved by the City Council, City Manager, Public Works Director, or City Engineer (dollar value of approval authority for each as per City policy);

A change that causes the total value of all changes to exceed the Contract contingency amount established at the time of award of the Contract must be approved by the City Council. No payments in excess of the original Contract Price will be made until a Change Order is approved in the normal course of business. The City may, at any time, without notice to Contractor's surety(ies), order changes in the Work within the general scope of the Contract. Such changes in the Work shall not relieve or release the surety(ies) of its(their) obligations under the Performance and Payment Bonds issued for the Project. Changes in the Work made pursuant to this Article 3 shall in no way release any guarantee or warranty provided by the Contractor.

The City may issue a Change Order Proposal Request ("COPR"), in writing, to the Contractor, describing a proposed change to the Work and requesting that the Contractor submit an itemized Change Order Proposal ("COP") to the City, using the forms provided herein in Section 3-6.2, within **ten (10) Calendar Days** after the City's issuance of the COPR. If Contractor fails to

submit a COP within such period of time, it shall be presumed that the change described in the City's COPR will not result in an increase to the Contract Price or Contract Time and the change shall be performed by Contractor without such increases. A COPR does not authorize the Contractor to commence performance of the changed work. Contractor shall not perform any change until receipt of the City's written approval. If the City approves Contractor's COP, Owner shall issue a Change Order or Construction Change Directive.

Whenever a change is pending, the Contractor shall notify the City if it is necessary to halt other Work in the area of the change that would be affected thereby, until such time as the change is authorized.

Any change to the Contract Price shall be in a sum mutually agreed to by the Contractor and the City, except that when, in the opinion of the City, such basis is not feasible, the change to the Contract Price shall be determined as provided for in Section 3-3 "Extra Work" of the Standard Specifications and City Special Provisions.

3-2.1.1 Change Orders

A Change Order is a written instrument prepared by the City and signed by the City and Contractor, stating their agreement upon all of the following:

A. The scope of the change in the Work;
B. The amount of the adjustment, if any, in the Contract Price; and
C. The extent of the adjustment, if any, in the Contract Time.

3-2.1.1.1 Accord and Satisfaction

Contractor's agreement on any Change Order shall be a full compromise and settlement of all adjustments to the Contract Time and Contract Price, and compensation for any and all delay, extended or additional field and home office overhead, disruption, acceleration, inefficiencies, lost labor or equipment productivity, differing site conditions, construction interferences, and other extraordinary or consequential damages (hereinafter called "Impacts"), including any ripple or cumulative effect of said Impacts on the overall Work under the Contract arising directly or indirectly from the performance of Work described in the Change Order. By execution of any Change Order, Contractor agrees that the Change Order constitutes a complete accord and satisfaction with respect to all claims for schedule extension, Impacts, or any costs of whatsoever nature, character or kind arising out of or incidental to the Change Order. No action, conduct, omission, product failure, or course of dealing by the City shall act to waive, modify, change, or alter the requirement that Change Orders must be in writing, signed by the City and Contractor, and that such written Change Orders are the exclusive method for effectuating any change to the Contract Sum and/or Contract Time.

3-2.1.2 Construction Change Directives

A Construction Change Directive is a written order prepared and signed by the City, directing a change in the Work prior to Contractor's agreement on adjustment, if any, in the Contract Price or Contract Time, or both. The City may by Construction Change Directive, without invalidating the Contract, order changes in the Work within the general scope of the Contract consisting of additions, deletions or other revisions, the Contract Price and Contract Time being adjusted accordingly. Upon receipt of a Construction Change Directive, the Contractor shall promptly proceed with the change in the Work involved. A Construction Change Directive shall be used in

the absence of total agreement on the terms of a Change Order. The City's form of Construction Change directive is provided in Section 3-6.2.

3-2.2.2 Increases of More than 25 Percent

Delete Section 3-2.2.2 in its entirety and substitute the following:

Should the actual quantity of a Major Item of Work covered by a Contract Unit Price and constructed in conformance with the Plans and Specifications exceed the Bid quantity by more than 25 percent, a Change Order will be issued and payment for the quantity in excess of 25 percent of the Bid quantity will be made on the basis of an adjustment to the Contract Unit price mutually agreed to by the City and Contractor or pursuant to Section 3-2.4 "Agreed Prices."

For Minor Items of Work, the Contractor will be paid using the Contract Unit Price, regardless of whether the actual quantity of the Minor Item of Work covered by a Contract Unit Price exceeds the bid quantity by more than 25 percent.

3-2.2.3 Decreases of More than 25 Percent

Delete Section 3-2.2.3 in its entirety and substitute the following:

Should the actual quantity of a Major Item of Work covered by a Contract Unit Price and constructed in conformance with the Plans and Specifications be less than 75 percent of the Bid quantity, an adjustment in payment will not be made unless so requested in writing by the Contractor. If the Contractor so requests, a Change Order shall be issued and payment shall be made on the basis of an adjustment to the Contract Unit Price mutually agreed to by the City and Contractor, or pursuant to Section 3-2.4 "Agreed Prices"; however, in no case will payment be less than would be made for the actual quantity at the Contract Unit Price.

For Minor Items of Work, the Contractor will be paid using the Contract Unit Price, regardless of whether the actual quantity of the Minor Item of Work covered by a Contract Unit Price is less than 75 percent of the Bid quantity.

3-2.2.4 Changes for Items Not Covered by Unit Prices

Payment for any change for an Item of Work not covered by a Contract Unit Price shall be made pursuant to Section 3-3 "Extra Work."

3-3 EXTRA WORK

3-3.1 General

Add the following at the end of Section 3-3.1:

The Contractor shall not perform any Extra Work except upon written authorization from the Engineer.

All Extra Work shall conform to the Plans and Specifications.

The Contractor shall furnish to the Engineer each Subcontractor's signed detailed estimate of the cost for labor, materials, and equipment, including the markup by such Subcontractor for overhead and profit for Work added or deducted to a Subcontractor's scope of Work. The Contractor shall furnish to the Engineer the Sub-subcontractor's signed detailed estimate of the cost for labor, materials, and equipment, including the markup by such Sub-subcontractor for overhead

and profit for Work added or deducted to a Sub-subcontractor's scope of Work. The Contractor shall furnish to the Engineer the vendor or supplier's signed detailed estimate or quotation of the cost to the Contractor for Work added or deducted from a vendor or supplier's scope of Work.

3-3.2.1 General

Add the following at the end of Section 3-3.2.1

Any change in the Work for an Item of Work not covered by a Contract Unit Price that involves both added and deleted Work shall be paid on the basis of the net total cost. The cost of deleted Work not covered by a Contract Unit Price shall be determined by the Engineer based on the schedule of lump sum prices submitted by the Contractor in accordance with Section 9-2 of the Standard Specifications and City Special Provisions.

3-3.2.2 Basis for Establishing Costs

Delete Section 3-3.2.2(a) in its entirety and substitute the following:

a) **Labor.** The cost of labor will be the actual cost for wages prevailing locally for each craft or type of worker (including foreman when authorized by the Engineer) performing the Extra Work at the time the Extra Work is done, plus liability insurance, health and welfare, pension, vacation, apprenticeship funds, and other direct costs, as well as assessments or benefits required by lawful collective bargaining agreements.

To the actual wages, as defined above, will be added a labor surcharge set forth in the California Department of Transportation publication entitled "Labor Surcharge and Equipment Rental Rates" that is in effect on the date upon which the Extra Work is performed. The labor surcharge shall constitute full compensation for all payments imposed by State and federal laws and for all other payments made to, or on behalf of, the workers, other than actual wages, subsistence and travel paid to the workers. The labor surcharge includes Workers' Compensation, Social Security, Medicare, Federal Unemployment, State Unemployment, and State Training taxes.

Except when direct supervision is provided by working foremen whose time is included in accordance with Section 3-2.2.2(a), the cost of direct supervision of Extra Work, when such direct supervision is provided exclusively for the Extra Work and not in conjunction with or at the same time as supervision for other Work, and when approved in advance in writing by the Engineer, may be charged to the Extra Work. Such cost includes only the actual cost of supervision labor, plus payroll taxes, insurance, and pension costs. The cost of transportation, use of vehicle, and other costs incurred by supervision will not be allowed.

Add the following to Section 3-3.2.2(b):

If the Contractor does not furnish satisfactory evidence of the cost of the materials from the actual supplier thereof within a specified time period after the date of delivery of material, the Engineer reserves the right to establish the cost of the materials at the lowest current wholesale prices at which the materials were available, in the quantities concerned, delivered to the location of the Work site, less any discounts.

Delete Section 3-3.2.2(c) in its entirety and substitute the following:

c) **Tool and Equipment Rental.** No payment will be made for individual pieces of equipment or tools not listed in the California Department of Transportation publication entitled "Labor Surcharge and Equipment Rental Rates" that is in effect on the date upon which the Extra

Work is performed and that have a replacement value of $200 or less, whether or not consumed by use. Such equipment or tools shall be considered to be small tools.

The Contractor will be paid for the use of equipment at the rental rates listed for such equipment in the Labor Surcharge and Equipment Rental Rates publication that is in effect on the date upon which the Extra Work is performed.

Move in and out, or minimum charges other than the hourly rate, shall not apply to equipment available from the force already on the Project site.

For equipment that is rented from a local equipment agency, the Contractor will be paid at the hourly rate shown on the rental agency invoice or agreement for the time the equipment is used on Extra Work. If a minimum equipment rental amount is required by the local equipment rental agency, the actual amount charged will be paid to the Contractor.

If it is deemed necessary by the Engineer to use equipment not listed in the Labor Surcharge and Equipment Rental Rates publication, a suitable rental rate for that equipment will be established by the Engineer. The Contractor may furnish any cost data that might assist the Engineer in the establishment of the rental rate. If the rental rate established by the Engineer is $10.00 per hour or less, the provisions above concerning rental of equipment from a local equipment agency shall apply.

Rental time will not be allowed while equipment is inoperative due to breakdowns.

When owner operated equipment is used to perform Extra Work to be paid on a force account basis, the Contractor will be paid for the equipment and operator as follows:

1. Payment for the equipment will be made at the rental rates listed for such equipment in the Labor Surcharge and Equipment Rental Rates publication that is in effect on the date upon which the Extra Work is performed.

2. Payment for the cost of labor will be made in conformance with the provisions in Subsection 3-3.2.2(a) "Labor" of the City Special Provisions.

3-3.2.3 Markup

Delete Section 3-3.2.3 in its entirety and substitute the following:

The markup for overhead and profit on Extra Work shall be in accordance with the following schedule.

(a) **Work by Contractor.** For Extra Work performed by the Contractor's forces, the following percentages shall be added to the Contractor's costs and shall constitute the markup for all overhead and profit: twenty percent (20%) for labor, fifteen percent (15%) for materials, and fifteen percent (15%) for equipment rentals.

(b) **Work by Subcontractor.** For Extra Work performed by a Subcontractor, the markup established in Section 3-3.2.3(a) of these City Special Provisions shall be applied to the Subcontractor's costs. An additional five percent (5%) shall be added to the Subcontractor's final cost, which shall reimburse the Contractor for administrative costs, including overhead and profit.

(c) **Work by Sub-subcontractor.** For Extra Work performed by a Sub-subcontractor, the markup established in Section 3-3.2.3(a) of these City Special Provisions shall be applied to the Sub-subcontractor's costs. An additional ten percent (10%) shall be added to the Sub-subcontractor's final cost, five percent (5%) of which shall reimburse the Contractor for administrative costs, including overhead and profit, and five percent (5%) of which shall reimburse the Subcontractor for administrative costs, including overhead and profit.

(d) **Work by Specialist.** If the Engineer and the Contractor agree that a service or an item of Extra Work cannot be performed by the forces of the Contractor or those of any of its Subcontractors or Sub-subcontractors, such service or Extra Work item may be performed by a specialist. Invoices for such services or items of Extra Work calculated on the basis of current market prices may be accepted without complete itemization of labor, material, and equipment rental costs when it is impracticable and not in accordance with the established practice of the special service industry to provide such complete itemization.

If the Contractor is required to perform Extra Work that requires a fabrication or matching process in a fabrication or machine shop facilities away from the Project site, the charges for that portion of the Extra Work performed in such facility may, by agreement between the Contractor and Engineer, be accepted as a specialist billing.

For Extra Work performed by a specialist, fifteen percent (15%) shall be added to the specialist's invoice price less a credit to the City for any cash or trade discount offered or available, whether or not such discount may have been taken; such percentage shall reimburse the Contractor for administrative costs, including overhead and profit.

(e) **Work not Covered by Unit Prices.** Markup for overhead and profit on any change in the Work for an Item of Work not covered by a Contract Unit Price that involves both added and deleted Work shall be paid, in accordance with this Section 3-3.2.3, only if the net cost increases the Contract Price (i.e. if the cost for added Work exceeds the cost for deleted Work).

3-3.3 Daily Reports by Contractor

Delete the first sentence of Section 3-3.3 and substitute the following:

The Contractor shall submit daily reports for Extra Work showing all labor, material, and equipment costs incurred.

Add the following at the end of Section 3-3.3:

The daily reports shall describe in detail the Extra Work that was performed and the location (station, etc.). Separate daily reports shall be submitted for Extra Work that is performed for more than one location and for different tasks that are performed on the same day. Material charges shall be substantiated by valid copies of vendor's invoices. Such invoices shall be submitted with the daily reports, or if not available, they shall be submitted with subsequent daily reports. The Contractor shall maintain Contractor's records in such a manner as to provide a clear accounting of the costs.

Upon completion of the Extra Work, the Contractor shall submit a summary of costs, including markup for overhead and profit. All costs shall be in accordance with Section 3-3.2 "Payment" of the Standard Specifications and City Special Provisions. The signature of the City's Inspector on a daily report shall indicate agreement with the information reflected therein, not that the Contractor is entitled to payment of the costs in the report. The Engineer shall review the daily reports. The Engineer shall compare Inspector's records with the completed daily reports furnished by the Contractor and make any necessary adjustments. When the daily reports are agreed upon and signed by both parties, said reports shall become the basis of payment for the Extra Work performed.

3-3.4 Extension of Time

If the Contractor is delayed in completing the Extra Work due to a change ordered by the City, the time for completion of Work will be extended for a period equal to the number of days by which the entire Project has been delayed because of such change. The Contractor will not be liable for liquidated damages for such period of time and shall have no claim for any additional compensation for any such delay except as otherwise provided in the Standard Specifications or City Special Provisions.

3-5 DISPUTED WORK

Delete Section 3-5 in its entirety and substitute the following:

In the event of disputed Work, the City shall have the right to unilaterally issue a written Work Directive and Contractor shall continue performance pending resolution of the dispute and shall maintain cost data described in Section 3-3. The City's form of Work Directive is provided in Section 3-6. Payment shall be made for such disputed Work as is later determined by negotiation between the parties or as is fixed by a court of law.

3-6 FORMS

3-6.1 Change Order Form

3-6.2 Change Order Proposal Forms

(a) Change Order Proposal Summary Report

(b) Labor Cost Report

(c) Labor Rates Report

(d) Material Cost Report

(e) Equipment Cost Report

(f) Special Forces/Services Cost Report

3-6.3 Construction Change Directive Form

3-6.4 Work Directive Form

CITY OF MORENO VALLEY
PUBLIC WORKS DEPARTMENT
Capital Projects Division

CONTRACT CHANGE ORDER NO. 1 (Final)

PROJECT NO.:

DESCRIPTION:

TO: **Construction Company, Inc.**

You are hereby requested to comply with the following changes from the Contract Plans and Specifications:

SUMMARY OF CHANGES		
Description (Detailed Explanation Attached)		**Change in** Contract Price[1]
1.		$0.00
2.	Adjustment in Final Bid Quantities	$0.00
	Net Change in Contract Price	**$0.00**

[1] Deduction or decrease in Contract Price is denoted in parentheses

The following change is hereby made a part of the Contract Documents and shall be performed under the same terms and conditions as required by the original Contract Documents. Except as modified herein, the original Contract Documents and all prior amendments shall remain in full force and effect and all of the terms of the Contract Documents are hereby incorporated in this Change Order.

SUMMARY OF ALL CHANGE ORDERS

ORIGINAL CONTRACT AMOUNT $000,000.00
CCO1 (FINAL) $0.00
TOTAL $000,000.00

SUMMARY OF WORKING DAYS

FIRST DAY OF WORK: ..... Date
CONTRACT WORKING DAYS: X
TIME EXTENSION:
CCO 1 (Final) ..... Y
NEW TOTAL WORKING DAYS: ..... X+Y
LAST DAY OF WORK: ..... New Date

CHANGE ORDER DETAIL

Change Order No.: **1 (Final)**

Project No.:

Description:

The changes or interpretations described and noted herein are hereby authorized. The signed original of this order is on file in the Department of Public Works. Shown as separate paragraphs: (A) Reason for Change; (B) Description of Change; (C) Change in Contract Costs; and (D) Change in Completion Date.

Item No. 1:

A. Reason for Change:

B. Description of Change:

ITEM	DESCRIPTION	UNIT	UNIT PRICE	BID OR CURRENT APPROVED QTY	FINAL QTY	CHANGE	CHANGE IN COST[1]
New Item				0	0	0	0.00

C. Change in Contract Cost:
Add $0.00

D. Change in Completion Date:
Add Y Working Days

Item No. 2: Adjustment in Final Bid Quantities:

A. Reason for Change:
Due to conditions encountered during construction, modifications to the amount of Work were determined to be appropriate, and the changes were addressed by means of adjusting applicable contract quantities, as outlined below.

B. Description of Change:

ITEM	DESCRIPTION	UNIT	UNIT PRICE	BID OR CURRENT APPROVED QTY	FINAL QTY	CHANGE	CHANGE IN COST[1]

[1] Deduction or decrease in Contract Price is denoted in parentheses

C. Change in Contract Cost:
Add $0.00

D. Change in Completion Date:
No Change.

SIGNATURE PAGE TO FOLLOW:

The original Contract Price was and 00/100 Dollars ($0.00). Contract Change Order No.1 (Final) increased the Contract Price by 00/100 Dollars ($0.00). The new Contract Price will be 00/100, resulting in an increase of approximately 0.00% to the original Contract.

The original Contract Time of X(x) Working Days was extended by Y (y) Working Days per Change Order No. 1 (Final). The last contract Working Day is new Date.

Ordered: _____ Date: _____
Public Works Director/City Engineer

Concurred by: _____ Date: _____
Deputy Public Works Director/Assistant City Engineer

Concurred by: _____ Date: _____
Project Manager

Acceptance by Contractor:

This Change Order is in full compromise and settlement of all adjustments to Contract Time and Contract Price, and compensation for any and all delay, extended or additional field and home office overhead, disruption, acceleration, inefficiencies, lost labor or equipment productivity, differing site conditions, construction interferences and other extraordinary or consequential damages (hereinafter called "Impacts"), including any ripple or cumulative effect of said Impacts on the overall Work under the Contract arising directly or indirectly from the performance of Work described in this Change Order. By execution of this Change Order, Contractor agrees that this Change Order constitutes a complete accord and satisfaction with respect to all claims for schedule extension, Impacts, or any costs of any nature, character or kind arising out of or incidental to this Change Order.

Name: _____ Date: _____

Title: _____

CHANGE ORDER PROPOSAL FORM

3-6.2(a) CONTRACT CHANGE ORDER PROPOSAL SUMMARY REPORT

Date_____

CCO Proposal No._____ **Contractor**_____

Item No._____ **Location**_____

AMOUNT

General Contractor

1. Labor Cost:..... $_____
2. Material Cost: ..... $_____
3. Equipment Cost:..... $_____
4. Special Forces/Services: ..... $_____

Subtotal Contractor Cost: ..... $_____

5. Subcontractor/Sub-subcontractor Name_____
   a. Labor Cost..... $_____
   b. Material Cost ..... $_____
   c. Equipment Cost..... $_____

Subtotal Subcontractor/Sub-subcontractor Cost ..... $_____

6. Subcontractor/Sub-subcontractor Name_____
   a. Labor Cost..... $_____
   b. Material Cost ..... $_____
   c. Equipment Cost..... $_____

Subtotal Subcontractor/Sub-subcontractor Cost ..... $_____

TOTAL CONTRACT CHANGE ORDER COSTS..... $_____

CHANGE ORDER PROPOSAL FORM

3-6.2(b) LABOR COST REPORT

Date_____

CCO Proposal No._____ **Contractor or Subcontractor**_____

Item No._____ **Location**_____

CLASSIFICATION AND NAME	HOURS	HOURLY RATE	EXTENDED AMOUNTS
Classification:	OT	$	$
Name:	REG	$	$
Classification:	OT	$	$
Name:	REG	$	$
Classification:	OT	$	$
Name:	REG	$	$
Classification:	OT	$	$
Name:	REG	$	$
Classification:	OT	$	$
Name:	REG	$	$
Classification:	OT	$	$
Name:	REG	$	$
TOTAL LABOR			**$**

Overhead/profit 20% ..... $_____

Total labor/overhead/profit ..... $_____

Subcontractor's mark-up of total sub-subcontractor
labor/overhead/profit (if applicable) 5% ..... $_____

General contractor's mark-up of total subcontractor
or sub-subcontractor labor/overhead/profit (if applicable) 5% ..... $_____

Total ..... **$**_____

CHANGE ORDER PROPOSAL FORM

3-6.2(c) LABOR RATES REPORT

Date_____

CCO Proposal No._____ **Contractor or Subcontractor**_____

Item No._____ **Location**_____

CLASSIFICATION:		
TAXABLE BASE:		**AMOUNT**
Base Hourly Pay		$
Vacation		$
TOTAL TAXABLE BASE		**$**
TAXES & INSURANCE	**PERCENT**	**AMOUNT**
Social Security Tax		$
State Unemployment Tax		$
Federal Unemployment Tax		$
Workmen's Compensation		$
Liability & Umbrella Insurance		$
TOTAL TAXES & INSURANCE		**$**
FRINGE BENEFITS	**AMOUNT**	
Pension	$	
Health & Welfare	$	
Training	$	
Other Fringe Benefits	$	
TOTAL FRINGE BENEFITS	**$**	
TOTAL LABOR RATE PER CLASSIFICATION	**$**	

CHANGE ORDER PROPOSAL FORM

3-6.2(d) MATERIAL COST REPORT

Date_____

CCO Proposal No._____ **Contractor or Subcontractor**_____

Item No._____ **Location**_____

INVOICE NO.	DESCRIPTION	AMOUNT
1.	Material	$
	Sales Tax (Prevailing Tax Rate) 7.75%	$
	Subtotal	$
2.	Material	$
	Sales Tax (Prevailing Tax Rate) 7.75%	$
	Subtotal	$
3.	Material	$
	Sales Tax (Prevailing Tax Rate) 7.75%	$
	Subtotal	$
SUBTOTAL MATERIAL COST		$

NOTE: An itemized list of materials, manufacturers, serial numbers, invoices, and other pertinent date shall be submitted along with the material cost report.

Overhead/profit 15% ..... $_____

Total material/overhead/profit ..... $_____

Subcontractor's mark-up of total sub-subcontractor
material/overhead/profit (if applicable) 5% ..... $_____

General contractor's mark-up of total subcontractor
or sub-subcontractor material/overhead/profit (if applicable) 5% ..... $_____

Total ..... **$**_____

CHANGE ORDER PROPOSAL FORM

3-6.2(e) EQUIPMENT COST REPORT

Date_____

CCO Proposal No._____ **Contractor or Subcontractor**_____

Item No._____ **Location**_____

3-6.2 (e) **EQUIPMENT COST REPORT**

EQUIPMENT NO. (Description, Type, Size)	HOURS	HOURLY RATE	EXTENDED AMOUNTS
SUBTOTAL EQUIPMENT COST			**$**

Overhead/profit 15% ..... $_____

Total equipment/overhead/profit ..... $_____

Subcontractor's mark-up of total sub-subcontractor
equipment/overhead/profit (if applicable) 5% ..... $_____

General contractor's mark-up of total subcontractor
or sub-subcontractor equipment/overhead/profit (if applicable) 5% ..... $_____

Total ..... **$**_____

CHANGE ORDER PROPOSAL FORM

3-6.2 (f) SPECIAL FORCES/SERVICES COST REPORT

Date_____

CCO Proposal No._____ **Contractor or Subcontractor**_____

Item No._____ **Location**_____

INVOICE NO.	DESCRIPTION	AMOUNT
1.		$
		$
	Subtotal	$
2.		$
		$
	Subtotal	$
3.		$
		$
	Subtotal	$
SUBTOTAL MATERIAL COST		$

NOTE: An itemized list of materials, manufacturers, serial numbers, invoices, and other pertinent date shall be submitted along with the special forces/services cost report.

Overhead/profit 15% ..... $_____

Total Special Forces/Services Overhead/Profit..... $_____

3-6.3 CONSTRUCTION CHANGE DIRECTIVE

Distribution to: OWNER ☐ CONTRACTOR ☐ OTHER ☐ PROJECT MANAGER ☐

PROJECT:

DIRECTIVE NO.:

DATE:

CONTRACT DATE:

TO CONTRACTOR:

CONTRACT FOR:

You are hereby directed to make the following change(s) to this Contract:

PROPOSED ADJUSTMENTS

1. The proposed basis of adjustment to the Contract Price is:

   [ ] Lump Sum (increase)(decrease) of $ _____.
   [ ] Unit Price of $ _____ per _____.
   [ ] Daily time and materials records of actual costs plus a overhead and profit, as provided in **Section 3-3 the Standard Specifications and City Special Provisions**, [subject to a Not-To-Exceed Amount of $ _____].
   [ ] as follows:

2. The Contract Time is proposed to (be adjusted) (remain unchanged). The proposed adjustment, if any, is (an increase of __ days) (a decrease of __ days).

If Contractor disagrees with the proposed adjustments, it must submit its own proposal within 10 days of the date of this Construction Change Directive pursuant to Contract Documents or the proposed adjustment will become final and binding on Contractor.

When signed by the City and received by the Contractor, this document becomes effective IMMEDIATELY as a Construction Change Directive (CCD), and the Contractor shall proceed with the change(s) described above.

Ordered: _____ Date: _____
Public Works Director/City Engineer

Concurred by: _____ Date: _____
Deputy Public Works Director/Assistant City Engineer

Prepared by: _____ Date: _____
Project Manager

3-6.4 WORK DIRECTIVE

Distribution to: OWNER ☐ CONTRACTOR ☐ FIELD ☐ OTHER ☐ PROJECT MANAGER ☐

PROJECT:

WORK DIRECTIVE NO.:

DATE:

CONTRACT DATE:

TO CONTRACTOR:

CONTRACT FOR:

You are hereby directed to continue performance of the following Work, without delay, pending resolution of the dispute concerning such Work and maintain the cost data described in Section 3-3 of the Standard Specifications and **City Special Provisions** to the Contract for the performance of such Work:

Neither the issuance of this Work Directive nor the requirement for the Contractor to maintain cost data constitutes approval by the City of a change in the Work or modification of the Contract Documents.

Ordered: _____ Date: _____
Public Works Director/City Engineer

Concurred by: _____ Date: _____
Deputy Public Works Director/Assistant City Engineer

Prepared by: _____ Date: _____
Project Manager

SECTION 4 - CONTROL OF MATERIALS

4-1 MATERIALS AND WORKMANSHIP

4-1.1.1 Property Rights in Materials

Nothing in the Contract shall be construed as vesting in the Contractor any right, title, or interest in material used in the Work after it has been attached or affixed to the Work or the soil. All such material shall become the property of the City upon being so attached or affixed.

4-1.2 Protection of Work and Materials

Add the following at the end of Section 4-1.2:

Materials shall not be stored in the right-of-way unless written permission is given by the Engineer.

4-1.4 Tests of Materials

Delete Section 4-1.4 in its entirety and substitute the following:

Unless otherwise called for in these City Special Provisions, all testing of materials will be performed by the City in such number and at such locations as deemed necessary by the Engineer to ensure compliance with the Contract Documents. The cost of all testing that can be performed within 50 miles of the Project will be borne by the City; the cost of all testing that must be performed 50 miles or more from the Project will be borne by the Contractor; the cost of all re-testing will be borne by the Contractor, and the amount due the City for said re-testing will be deducted from the Contract Price via Change Order.

The cost of rework material testing, overtime, travel and other related costs incurred by the City will be deducted from the Contract Price via Change Order.

4-1.5 Certificate of Compliance

Add the following at the end of Section 4-1.5:

A certificate of compliance shall be furnished prior to the use of any materials for which the Standard Specifications or City Special Provisions require that a certificate be furnished. In addition, when so authorized in the Standard Specifications or City Special Provisions, the Engineer may permit the use of certain materials or assemblies prior to sampling and testing if accompanied by a certificate of compliance. The certificate shall be signed by the manufacturer of the material or the manufacturer of assembled materials, and shall state that the materials involved comply in all respects with the requirements of the Specifications. A certificate of compliance shall be furnished with each lot of material delivered to the Project and each lot shall be clearly identified in the certificate.

All materials used on the basis of a certificate of compliance may be sampled and tested at any time. The fact that material is used on the basis of a certificate of compliance shall not relieve the Contractor of responsibility for incorporating material in the Work which conforms to the requirements of the Contract Documents, and any material not conforming to the requirements will be subject to rejection, whether in place or not.

The City reserves the right to refuse to permit the use of material on the basis of a certificate of compliance.

4-1.6 Trade Names or Equals

Add the following at the end of Section 4-1.6:

The phrase "or equal" shall mean "or approved as equal in the opinion of the Engineer."

Within ten (10) Working Days after the date of Contract award, the Contractor shall, at its expense, submit a written request to the Engineer for each desired substitution for final evaluation by the Engineer. Each substitution request shall be accompanied by complete descriptive information from the manufacturer, samples as requested by the Engineer, complete detailed test results from a licensed independent testing laboratory of the City's choice if requested by the Engineer, and, if requested by the Engineer, an evaluation report from a qualified licensed professional engineer. If, in the Engineer's opinion, the requested substitution is of lesser quality or in variance with that specified, or if the information submitted is insufficient or incomplete, the requested substitution will not be approved and the specified materials or equipment shall be furnished. No request for substitutions submitted more than ten (10) Working Days after the date of Contract award will be considered.

In accordance with Public Contract Code Section 3400, the City may describe in the Notice Inviting Bids a finding that a particular material, product, thing, or service is designated by specific brand or trade name for any of the following purposes:

1. In order that a field test or experiment may be made to determine the product's suitability for future use.
2. In order to match other products in use on a particular public improvement either completed or in the course of completion.
3. In order to obtain a necessary item that is only available from one source.
4. A. In order to respond to an emergency declared by a local agency, but only if the declaration is approved by a four-fifths vote of the City Council.
   B. In order to respond to an emergency declared by the State, a State agency, or political subdivision of the State, but only if the facts setting forth the reasons for the finding of the emergency are contained in the public records of the City Council.

4-1.10 Foreign Materials

Materials which are manufactured, produced, or fabricated outside of the United States shall be delivered to a distribution point in California, unless otherwise required by the Standard Specifications or City Special Provisions, where they shall be retained for a sufficient period of time to permit inspection, sampling, and testing.

The Contract Time shall not be extended due to acts or events occurring outside of the United States and it shall be the Contractor's responsibility to deliver materials obtained from outside of the United States to the point of entry into the continental United States in sufficient time to permit timely delivery to the Project site.

The cost of all testing that can be performed within 50 miles of the Project will be borne by the City; the cost of all testing that must be performed 50 miles or more from the Project will be borne by the Contractor; the cost of all re-testing will be borne by the Contractor, and the amount due the City for said re-testing will be deducted from the Contract Price via Change Order.

The manufacturer, producer, or fabricator of foreign material shall furnish to the Engineer a certificate of compliance in accordance with Subsection 4-1.5. In addition, certified mill test reports

or actual specimen tests clearly identifiable to the lot of material shall be furnished as required by the Standard Specifications or Special Provision, or as otherwise required by the Engineer.

If the welding of steel for structural steel members or the casting and prestressing of precast prestressed concrete members is to be performed outside of the United States, the following requirements shall apply:

A. The fabrication shall be performed only within the plants and by fabricators who have previously established, to the satisfaction of the Engineer, that they have the experience, knowledge, trained manpower, quality controls, equipment and other facilities required to produce the quality and quantity of work required. At the option of the Engineer, prequalification of the plant and fabricator will be established either by the submission of detailed written proof thereof or through in-plant inspection by the Engineer or the Engineer's representative, or both.

B. The Contractor shall make written application to the Engineer for approval for the foreign fabrication at the earliest possible time and in no case later than fifty (50) days in advance of the planned start of fabrication. The application shall list the specific units or portion of Work that will be fabricated outside of the United States.

C. The Contractor shall advise the Engineer, in writing, at least twenty (20) days in advance of the actual start of any of the foreign fabrication.

D. All documents pertaining to the foreign fabrication, including, but not limited to, correspondence, bids, proposals, working drawings, and data shall be written in the English language and all numerical data shall use the International System of Units (SI) for measurement.

4-1.11 State Specification Number

The State specification number of material furnished under the Contract shall conform to the number specified in the Standard Specifications, City Special Provisions, or Specifications issued after the Standard Specifications and City Special Provisions.

SECTION 5 – UTILITIES

5-1 LOCATION

Delete Section 5-1 in its entirety and substitute the following:

In accordance with California Government Code Section 4216 et seq., when Work is to be conducted in an area which is known, or reasonably known, to contain underground utilities or subsurface improvements, the Contractor shall contact Underground Service Alert of Southern California at least two (2) Working Days, but not more than 14 Calendar Days, in advance of any construction activity that will or could damage or affect any underground utility or subsurface improvement, and obtain an inquiry identification number (CGC 4216). The Contractor shall delineate with white paint or other suitable markings the area to be excavated. The Contractor shall notify Underground Service Alert in the event of change in the Project limits or change in original Work previously shown on the Plans or indicated in the Specifications. When all Work is completed, the Contractor shall remove all markings for underground utilities.

Subsurface installations are any underground pipeline, conduit, duct, wire, or other structure, except nonpressurized sewer lines, nonpressurized storm drains, or other nonpressurized drain lines. "Approximate location of subsurface installations" means a strip of land not more than 24 inches on either side of the exterior surface of the subsurface installation. "Approximate location" does not mean depth. (CGC 4216). When the subsurface installation markings are no longer reasonably visible, the Contractor shall notify Underground Service Alert to remark those subsurface installations that may be affected by excavation to the extent necessary (CGC 4216.3(c)).

5-5 DELAYS

Add the following at the end of Section 5-5:

In accordance with California Government Code Section 4215, if such utilities have not been identified with reasonable accuracy in the Contract Documents, the Contractor shall be compensated for the cost of locating, repairing damage not due to the failure of the Contractor to exercise reasonable care, and removing or relocating such utility facilities not indicated in the Plans and Specifications with reasonable accuracy, and for equipment on the Project necessarily idled during such Work. The Contractor shall not be assessed liquidated damages for delay in completion of the Project, when such delay was caused by the failure of the City or the owner of the utility to provide for removal or relocation of such utility facilities.

5-7 AGENCY TELEPHONE NUMBERS

The following list of individuals or entities, which may have facilities in the area to be improved hereunder, is merely for the Contractor's information and may not be accurate or complete:

Box Springs Mutual Water Company 951.653.6419
City of Moreno Valley Police Department 951.486.6700
City of Moreno Valley, Public Works Department 951.413.3100
City of Moreno Valley, PW Operations & Facilities 951.413.3160
Eastern Municipal Water District 800.426.3693
Edgemont Community Services District (Albert A. Webb & Assoc.).....951.686.1070
Moreno Valley Unified School District.....951.485.5600
Moreno Valley Utilities (electrical).....877.811.8700
Questar Southern Trails.....714.379.3376

Riverside Transit Agency	951.684.0850
SBC (formerly Pacific Bell)	800.750.2355
Southern California Edison Company	800.684.8123
Southern California Gas Company (Distribution)	909.335.3919
Southern California Gas Company (Transmission)	213.244.2268
Sunesys	951.278.0400
Time Warner Communications	951.549.3977
Underground Service Alert	800.227.2600
United States Postal Service	951.656.3240
Val Verde Unified School District	951.940.6100
Verizon	800.483.4000
Waste Management	800.423.9986
Western Municipal Water District	951.789.5109

5-8 SOUTHERN CALIFORNIA EDISON TEMPORARY ELECTRICAL SERVICE CONNECTION FOR CONSTRUCTION POWER

The Contractor shall apply for and pay all charges levied by Southern California Edison for rendering temporary electrical service to this Project. Charges can be obtained by contacting Southern California Edison, 26100 Menifee Road, Romoland, California 92585, Telephone 951.928.8288. The foregoing address and telephone number are for informational assistance only and may not be accurate or complete.

SECTION 6 – PROSECUTION, PROGRESS, AND ACCEPTANCE OF THE WORK

6-1 CONSTRUCTION SCHEDULE AND COMMENCEMENT OF WORK

6.1.1 Construction Schedule

Delete the first sentence of Section 6.1.1 and substitute the following:

The Contractor shall submit a proposed construction schedule (Gant Chart) for the entire Work to the Engineer for review and approval five (5) Working Days prior to the pre-construction meeting and revised schedules thereafter as required by the Engineer when the Contractor's activities differ or are expected to differ from the latest existing schedule. If, on the date of commencement established in the Notice to Proceed, the Contractor has not submitted a construction schedule the Contractor will not be allowed to start Work and no extension of the Contract Time will be granted. The Contractor shall refer to the PROJECT SPECIFIC SCOPE OF WORK section in the Technical Provisions for any required or preferred sequence of Work.

Add the following at the end of Section 6.1.1:

The Contractor's Representative and the Contractor's principal Subcontractors shall attend the City's pre-construction meeting. Other agencies and utilities involved in this Project may also have separate pre-construction meetings; the Contractor and applicable Subcontractors are required to attend the agency/utility meetings.

6-1.2 Commencement of the Work

In the second sentence of Section 6-1.2, add the word "calendar" before the word "days."

6-3 SUSPENSION OF WORK

6-3.2 Archaeological and Paleontological Discoveries

Add the following at the end of Section 6-3.2:

During construction, if subsurface archaeological resources are encountered, they shall be left in place and a qualified archaeologist shall be called in to examine the findings. Work shall not resume, where discovery was made, until the archaeologist has reviewed the findings, made recommendations for their removal or preservation, and has a reasonable opportunity to carry out the necessary mitigation procedures. The Contract Time will be extended due to the discovery of subsurface archaeological resources only if the Contractor shows that there is no possible way to proceed with other Work items during the time Work was ceased pursuant to this Section.

6-5 TERMINATION OF THE CONTRACT

Delete Section 6-5 in its entirety and substitute the following:

6-5.1 Termination for Cause

6-5.1.1 Grounds. The City shall have the right to terminate the Contractor's performance of the Work, in whole or in part, if:

A. Contractor fails to promptly commence the Work or unnecessarily or unreasonably delays the Work or improperly discontinues the prosecution of the Work or abandons the Work;

B. Contractor refuses or fails to supply skilled supervisory personnel, an adequate number of properly skilled workers, proper materials, or necessary equipment to perform the Work in strict accordance with the Contract Documents, and the latest approved construction schedule;
C. Contractor fails to make prompt payment of amounts properly due Subcontractors after receiving payment from the City;
D. Contractor disregards Applicable Law, statutes, ordinances, codes, rules, regulations, or lawful orders of a public authority;
E. Contractor fails to resume performance of Work which has been suspended or stopped, within a reasonable time after receipt of notice from the City to do so or (if applicable) after cessation of the event preventing performance;
F. Any representation or warranty made by Contractor in the Contract Documents or any certificate, schedule, instrument, or other document delivered by Contractor pursuant to the Contract Documents shall have been false or materially misleading when made;
G. After commencement of the Work, the City becomes aware that the Contractor is using an ineligible contractor, Subcontractor or supplier who was barred from performing Work or providing materials or services on City projects at the time of Bid;
H. Contractor fails to make payment to Subcontractors for materials or labor in accordance with the respective Contract Documents and Applicable Law;
I. The Contract is assigned or the Work is sublet otherwise than as specified in the Contract Documents;
J. Contractor otherwise is guilty of breach of a provision of the Contract Documents; or
K. Contractor materially fails to execute the Work in accordance with the Contract Documents or, in the City's opinion, is violating any of the terms of the Contract or is not executing the Contract in good faith or is not following instructions of the City as to additional force necessary in the opinion of the City for completion of the Work within the required time.

When the City terminates the Contractor's performance of the Work for one of the reasons stated in this Section 6-5.1.1, the Contractor shall not be entitled to receive further payment until the Work is finished by others in accordance with Section 6-5.1.2 of the City Special Provisions.

6-5.1.2 City's Rights Upon Termination of Contract. When any of the reasons specified in the preceding Section exist, the City may, in addition to and without prejudice to any other rights or remedies of the City, notify the Contractor not to resume or to discontinue all Work, or any part thereof, by written notice of default. The City shall advise the Performance Bond surety of the notice of default and that they will be given **fifteen (15) Calendar Days** to arrange for completion of the Work in accordance with the Contract Documents by another contractor or contractors satisfactory to the City. Should the surety fail to effect satisfactory arrangements within said 15-day period, the City shall have the right to issue a notice of termination and to:

A. Exclude the Contractor from the Project site;
B. Take possession of the Project site and of all materials, equipment, tools and construction equipment, and machinery thereon owned by the Contractor;
C. Suspend any further payments to Contractor;
D. Accept assignment of Subcontracts pursuant; and
E. Finish the Work by whatever reasonable method the City may deem expedient.

6-5.1.3 Cost of Completion of Work. The City shall charge the cost to complete the Work, including, but not limited to, protection, investigation, labor, services, equipment, materials, permits, fees, supervisory and administrative costs to Contractor and its Performance Bond surety. If the

unpaid balance of the Contract Price exceeds costs of finishing the Work, including expenses and damages incurred by the Owner and not expressly waived, such excess shall be paid to the Contractor. If City's cost to complete the Work and damages incurred by City due to Contractor's default exceed the unpaid Contract Price, the Contractor and its Performance Bond surety shall pay the difference to the City.

6-5.1.4 Erroneous Termination. If it has been adjudicated or otherwise determined that the City has erroneously or negligently terminated the Contractor for cause, then said termination shall automatically convert to a termination by the City for convenience as set forth in **Section 6-5.2**.

6-5.1.5 Acceptance of Incomplete or Non-Conforming Work. In lieu of the provisions of this Section for terminating the Contractor's performance, Owner may pay the Contractor for the portion of Work completed according to the provisions of the Contract Documents and may treat the incomplete Work as if they had never been included or contemplated by this Contract, in which case the Contract Price will be reduced by the value of the deleted Work determined in accordance with **Section 3** of the Standard Specifications and City Special Provisions. No Claim under this provision will be allowed the Contractor for overhead or prospective profits on Work not completed by the Contractor.

6-5.2 Termination for Convenience

6-5.2.1 Grounds. The City may, at any time, terminate the Contractor's performance of the Work, in whole or in part, for the City's convenience without regard to Contractor's fault or breach upon fourteen (14) Calendar Days' written notice to Contractor.

6-5.2.2 Immediate Contractor Action. Upon receipt of written notice from the City of such termination for the City's convenience, the Contractor shall, unless the notice directs otherwise, do the following:

A. Cease performance of the Work to the extent specified in the notice;
B. Cooperate with the City to secure the site and demobilize in a safe and orderly fashion;
C. Take actions necessary, or that the City may direct, for the protection and preservation of the Work;
D. Except for Work directed to be performed in the notice, incur no further costs and enter into no further subcontracts and purchase orders;
E. If requested by the City, assign to the City, in the manner and to the extent directed, all of the right, title and interest to the Contractor under the subcontracts, and the City shall have no liability for acts, omissions, or causes of action resulting therefrom which accrued prior to the date of termination and assignment, which liability shall remain with the Contractor; and
F. Turn over to the City, as soon as possible, but not later than thirty (30) Calendar Days after receipt of such termination notice, the originals of all of the Contractor's records, files, documents, drawings, and any other items relating to the Project, whether located on the Project site, at the Contractor's office, or elsewhere.

6-5.2.3 Waiver of Claims. In the event that the City terminates Contractor's performance of the Work for convenience, Contractor agrees to waive any claims for damages, including, but not limited to, home office overhead, loss of anticipated profits on account thereof, and, as the sole right and remedy of Contractor, the City shall pay Contractor in accordance with Subsection 6-5.2.4 below.

The provisions of the Agreement, which by their nature survive final acceptance of the Work, shall remain in full force and effect after such termination to the extent provided in such provisions.

6-5.2.4 Compensation. Upon termination for convenience, Contractor shall be entitled to be paid the full cost of all Work properly done by Contractor prior to the date of termination not previously paid for, less sums already received by Contractor on account of the portion of the Work satisfactorily performed, but in no event shall the amounts paid hereunder exceed the portion of Work completed in accordance with the Contract Documents. In no event shall Contractor be entitled to recover any costs, overhead, or profit for Work not performed prior to the termination notice(s).

6-6 DELAYS AND EXTENSIONS OF TIME

6-6.1 General

Delete Section 6-6.1 in its entirety and substitute the following:

Work will not be allowed on days predicted by the South Coast Air Quality Management District (SAQMD) to be "Stage III" smog episode days. Notification will be given to the Contractor's Representative by the Engineer no later than 3:00 p.m. on the day preceding the predicted "Stage III" episode day. The Contractor will be entitled to an extension of Contract Time for such delays, but the Contractor will not be entitled to damages or additional payment due to such delays.

Work required to maintain the Project site in a safe condition (including but not limited to maintenance of traffic control), shall be allowed on **all** days.

6-6.3.1 Excusable Non-Compensable Delay. The Parties acknowledge that the following types of events are not within the responsibility or control of City or are reasonably contemplated by the Parties to occur during the course of performance of the Work, which may impact the schedule for performance of the Work and may entitle Contractor to an extension of the Contract Time: (1) pulling of cables, energizing of the underground electrical system, and removal of overhead power lines and power poles by Southern California Edison, or any other contractor, on or adjacent to the Project site; and (2) "Force Majeure" events as defined herein ("Excusable Non-Compensable Delays"). "Force Majeure" means any of the following events, which materially and adversely affect Contractor's obligations hereunder: earthquakes, acts of God, epidemic, blockade, embargoes, rebellion, war, terrorism, national emergency, riot, act of sabotage, civil commotion, industry-wide labor strike which has material adverse impact on the Work, discovery of any archaeological, paleontological, or cultural resources, spill of hazardous substances by a third party at or near the Project site which is required to be reported to the California Environmental Protection Agency, Department of Toxic Substances Control, discovery at, near, or on the Project site of any species listed as "threatened" or "endangered" under the Federal or State Endangered Species Act, or unusually severe weather conditions.

An extension of the Contract Time shall be the Contractor's sole remedy of Contractor for Excusable Non-Compensable Delays. In no event shall Contractor be entitled to any compensation or recovery of any damages in connection with the Excusable Non-Compensable Delays defined above.

6-6.3.2 Excusable Compensable Delay. "Excusable Compensable Delay" means any delay to the Critical Path of the Work occurring after commencement and prior to completion of the Work: (1) which directly impacts the Contract Time established in the Agreement; (2) for which the City is responsible, is unreasonable under the circumstances involved and not within the contemplation of

the Parties; and (3) is not due, in whole or in part, to the breach, negligence, or fault of Contractor, or its Subcontractors or suppliers. Contractor's remedy for Excusable Compensable Delay shall be an extension of the Contract Time and reimbursement of actual costs directly resulting from such delays and markup established according to Section 3-3.2.3 herein.

6-7 TIME OF COMPLETION

6-7.2 Working Day

Delete Section 6-7.2 in its entirety and substitute the following:

The term "Working Day" shall mean any Calendar Day except Saturdays, Sundays, and legal holidays observed at the locale of the Project. City Hall is open Monday through Thursday 7:30 a.m. to 6:00 p.m. On the 2nd and 4th Fridays of the month, City Hall is open 7:30 a.m. to 1:30 p.m. (Development Services only), and is closed all other Fridays; however, Friday is a Working Day.

The following days have been designated as holidays by the City of Moreno Valley:

New Year's Day.....January 1
Martin Luther King, Jr. Day .....3rd Monday in January
President's Day .....3rd Monday in February
Memorial Day .....Last Monday in May
Independence Day.....July 4
Labor Day.....1st Monday in September
Veterans' Day.....November 11
Thanksgiving .....4th Thursday in November
Day after Thanksgiving .....4th Friday in November
Christmas Eve.....December 24
Christmas Day.....December 25

If a holiday falls upon a Sunday, the following Monday shall be the day the holiday is observed, and if a holiday falls upon a Saturday, the preceding Friday shall be the day the holiday is observed.

6-7.3 Contract Time Accounting

Add the following at the end of Section 6-7.3:

The Contract Time for completion of the Work, including corrective items of Work, shall be in accordance with Section 5 of the Agreement. Contract Time extensions, when granted by the Engineer, will be in Working Days, will be in accordance with the Contract Documents, and will be set forth in writing via Change Order.

6-7.4 Work Outside Regular Hours

Work shall not be allowed outside of regular working hours (weekdays, 7:00 a.m. to 3:30 p.m., unless otherwise specified) without the advance approval of the Engineer, except Work items relating to maintenance and clean up of the Work area for the purpose of public safety and convenience. The Contractor shall request such approval from the Engineer at least 48 hours (two Working Days) in advance of the proposed Work. The Contractor shall not fuel, grease, or otherwise service equipment or trucks from 7:00 p.m. to 6:00 a.m., Monday through Friday, and at no time on Sunday or holidays. Service work on equipment will be allowed on Saturday from 8:00 a.m. to 4:00 p.m.

Should Work outside of the above hours be approved, inspection, testing and construction engineering costs as a result of the Work outside of regular working hours shall be paid by the Contractor at the hourly rate, including fringe benefits, at straight time or time and one-half rates as applicable, or if a consultant inspection service is retained by the City, then the Contractor will reimburse the City for the actual cost. Under no circumstances will Work outside regular hours be allowed without full-time inspection.

6-8 COMPLETION, ACCEPTANCE, AND WARRANTY

6-8.1 Warranty of Work and Materials

The Contractor warrants to the City that materials and equipment furnished under the Contract will be of good quality and new unless the Contract Documents require or permit otherwise. The Contractor further warrants that the Work will conform to the requirements of the Contract Documents and will be free from defects, except for those inherent in the quality of the Work the Contract Documents require or permit. Work, materials, or equipment not conforming to these requirements, including "or equal" substitutions not properly approved and authorized, may be considered defective. The Contractor's warranty excludes remedy for damage or defect caused by abuse, alterations to the Work not executed by the Contractor, improper or insufficient maintenance, improper operation, or normal wear and tear and normal usage. If required by the Engineer, the Contractor shall furnish satisfactory evidence as to the kind and quality of materials and equipment. Contractor's Performance Bond surety shall be liable for breaches of these warranties and the correction guarantees described herein.

In addition to the Contractor's obligations described above, if, within **one (1) year** after the date of Final Acceptance of the Work or designated portion thereof, or by terms of an applicable special warranty required by the Contract Documents, any of the Work is found to be not in accordance with the requirements of the Contract Documents, the Contractor shall, at its own expense, correct it promptly after receipt of written notice from the City to do. Such correction shall consist of making any repair or replacement necessary, including repair of settled backfill and resurfacing. In addition, Contractor shall pay administrative costs related to inspection, testing, Contract administration, and attorneys' fees incurred to bring the Work to full compliance with the Contract Documents. If the Contractor fails to make such correction promptly, the City may, at its sole option, with its own or outside forces, correct the deficiencies. In such case, an appropriate Change Order or Construction Change Directive shall be issued deducting from payments then or thereafter due the Contractor the reasonable cost of correcting such deficiencies, including compensation for the additional services and expenses made necessary by the failure of Contractor to correct the deficiencies. If payments then or thereafter due the Contractor are not sufficient to cover such amounts, the City shall invoice the Contractor for the difference and the Contractor shall pay the difference to the City, immediately.

During the one-year correction guarantee period, the Contractor shall act on all regular complaints within 48 hours and immediately for emergency repairs. The Owner will not be required to call Subcontractors, suppliers or manufacturers directly.

The one-year period for correction of Work shall be extended by corrective Work performed by the Contractor (i.e. the one-year correction period will re-start upon completion of corrective Work).

If, in the opinion of the Engineer, defective or non-conforming Work creates a dangerous condition or requires immediate correction or attention to prevent further loss to the City or to prevent interruption of operations of the City, the City will attempt to give the notice required by this Section. If the Contractor cannot be contacted or does not comply with the Engineer's request for correction within a reasonable time as determined by the Engineer, the City may, in accordance with this Section, proceed to make such correction or provide such attention, and the costs of such correction or attention shall be charged against the Contractor. Such action by the City will not relieve the Contractor of the guarantees provided in this Section or elsewhere in the Contract Documents.

This Section does not in any way limit the warranty on any items for which a longer warranty is specified or on any items for which a manufacturer gives a guarantee for a longer period. The Contractor shall furnish to the City all appropriate warranty or guarantee certificates, as required, upon completion of the Project.

Nothing contained in this Section shall be construed to establish a period of limitation with respect to other obligations the Contractor has under the Contract Documents. Establishment of the one-year period for correction of Work as described in herein relates only to the specific obligation of the Contractor to correct the Work, and has no relationship to the time within which the obligation to comply with the Contract Documents may be sought to be enforced, nor to the time within which proceedings may be commenced to establish the Contractor's liability with respect to the Contractor's obligations other than specifically to correct the Work.

6-9 LIQUIDATED DAMAGES

Delete Section 6-9 in its entirety. See Paragraph 6.1 of the Agreement.

SECTION 7 – RESPONSIBILITIES OF THE CONTRACTOR

7-1 THE CONTRACTOR'S EQUIPMENT AND FACILITIES

7-1.1 General

Add the following at the end of the first paragraph of Section 7-1.1:

Such equipment and facilities shall meet all requirements of Applicable Law.

Add the following at the end of the second paragraph of Section 7-1.1:

The Contractor shall provide a hand washing facility. The Contractor shall comply with all Applicable Law pertaining to public health and sanitation.

7-2.3 Payment of Prevailing Wages and Employment of Apprentices

7-2.3.1 Determination of Prevailing Wage Rates

7-2.3.1.1 The City has determined that the Contractor and Subcontractors of any tier must pay not less than the prevailing wage rates to all workers employed in execution of the Contract. The Director of the Department of Industrial Relations, State of California (DIR) pursuant to the California Labor Code, has determined the general prevailing rates of wages in the locality in which the Work is to be performed. The City has obtained from the Director of the Department of Industrial Relations (DIR) pursuant to the Labor Code determinations of the generally prevailing rates of per diem wages and the prevailing rate for holiday and overtime work in the locality in which the Work is to be performed. Copies of said rates are on file with the Capital Projects Division of the City and will be made available for inspection during regular business hours and are also available on the Internet at the California Department of Industrial Relations website: http://www.dir.ca.gov/dlsr/DPreWageDetermination.htm. Future effective general prevailing wage rates, which have been predetermined and are on file with the California Department of Industrial Relations are referenced but not printed in the general prevailing wage rates.

7-2.3.1.2 The wage rate for any classification not listed, but which may be required to execute the Work, shall be commensurate and in accord with specified rates for similar or comparable classifications for those performing similar or comparable duties. Holidays shall be as defined in the collective bargaining agreement applicable to each particular craft, classification, or type of worker employed under the Contract. Per diem wages include employer payments for health and welfare, pensions, vacation, travel time and subsistence pay, apprenticeship or other training programs authorized by California Labor Code § 3093, and similar purposes when the term "per diem wages" is used herein. Holiday and overtime work, when permitted by law, must be paid for at the rate of at least one and one-half (1½) times the above specified rate of per diem wages, unless otherwise specified. In accordance with Section 1773.2 of the California Labor Code, the Contractor must post a schedule showing all applicable prevailing wage rates at appropriate and conspicuous locations on the job site where they can easily be seen by workers.

7-2.3.1.3 Contractor is required to utilize apprentices as required by the California Labor Code and applicable regulations. Only apprentices, as defined in California Labor Code § 3077, who are in training under apprenticeship standards and written apprenticeship agreements under California Labor Code § 3070 *et seq.* are eligible to be employed for the Work.

7-2.3.2 Payment of Prevailing Wage Rates

7-2.3.2.1 Statutory Requirements

The Project is subject to the provisions of Labor Code § 1720 *et seq.* and the requirements of Title 8 of the California Code of Regulations § 16000 *et seq.*, which govern the payment of prevailing wage rates on public works projects. The Contractor and Subcontractors of any tier shall be governed by and required to comply with these statutes and regulations in connection with the Project. Pursuant to Labor Code § 1771, the Contractor and all Subcontractors of any tier must pay not less than the prevailing wage rates to all workers employed in execution of the Contract. Contractor and Subcontractors must comply with all applicable statutes and regulations, including, but not limited to, Labor Code §§ 1771, 1775, 1777.5, 1813, and 1815.

7-2.3.2.2 Weekly Payments to Employees

Contractor and all Subcontractors of any tier must pay each worker on the Project, unconditionally and not less often than once each week, the full amounts that are due and payable for the period covered by the particular payday in accordance with the prevailing wage scale determination, regardless of any contractual relationship which may be alleged to exist between the Contractor, Subcontractor, and such laborers. Thus, an employer must establish a fixed workweek and an established payday. On each payday, each worker must receive all sums due at the end of the preceding workweek and must be provided with an itemized wage statement.

7-2.3.2.3 Classifications

The City shall require that any class of laborers or mechanics, including apprentices and trainees, which are not listed in the General Wage Determinations and which are to be employed under this Contract, shall be classified conformably to such wage determinations. In the event the City does not concur in the Contractor's proposed classification or reclassification of a particular class of laborers and mechanics (including apprentices and trainees) to be used, the question, accompanied by the recommendation of the City, shall be referred to the State Director of Industrial Relations for determination.

7-2.3.2.4 Fringe Benefit Cash Equivalent

The City shall require, whenever the minimum wage rate prescribed for a class of laborers or mechanics includes a fringe benefit which is not expressed as an hourly wage and the Contractor is obligated to pay a cash equivalent of such a fringe benefit, an hourly cash equivalent thereof must be established. In the event the interested parties cannot agree upon cash equivalent of the fringe benefit, the questions, accompanied by the recommendation of the City, shall be referred to the State Director of Industrial Relations for determination.

7-2.3.3 Penalty for Prevailing Wage Rate Underpayment

Pursuant to Labor Code § 1775, the Contractor must, as a penalty, forfeit not more than Two Hundred Dollars ($200.00) to the State or the Owner for each Calendar Day or portion thereof, for each worker paid less than the prevailing wage rates as determined by the Director of the Department of Industrial Relations for such work or craft in which such worker is employed for the Work by the Contractor or by any Subcontractor, of any tier, in connection with the Work. The difference between prevailing wage rates and the amount paid to each worker each Calendar Day,

or portion thereof, for which each worker paid less than the prevailing wage rate, must be paid to each worker by the Contractor.

7-2.3.4 Withholding

The City shall upon its own action or upon written request of an authorized representative of the Department of Labor or DIR, withhold or cause to be withheld from the Contractor under this Contract so much of the accrued payments or advances as may be considered necessary to pay laborers and mechanics, including apprentices, trainees, and helpers, employed by the Contractor or any Subcontractor the full amount of wages required by the Contract. In the event of failure to pay any laborer or mechanic, including any apprentice, trainee, or helper, employed or working on the site of the Work, all or part of the wages required by the Contract, the City may, after written notice to the Contractor, take such action as may be necessary to cause the suspension of any further payment, advance, or guarantee of funds until such violations have ceased.

7-2.3.5 Certified Payroll Records and Basic Payroll Records

The Contractor and Subcontractors of any tier must maintain Certified Payroll Records and "Basic Payroll Records," defined as time cards, front and back copies of canceled checks, cash receipts, trust fund forms, daily logs, employee sign-in sheets, accounting ledgers, tax forms and/or any other record maintained for the purposes of reporting payroll, during the course of the Work and must preserve them for a period of **three (3) years** after completion of the Project for all tradesworkers executing the Work of the Contract. Certified Payroll Records must be submitted at the times designated in **Section 7-2.3.6** below or upon request as described in **Section 7-2.3.7** below. The City reserves the right to require Contractor to routinely submit Basic Payroll Records may be requested by the City at any time and must be provided within **ten (10) Calendar Days** following the receipt of the request.

7-2.3.6 Submittal of Certified Payroll Records

Pursuant to Labor Code § 1776, the Contractor and each Subcontractor of any tier must maintain an accurate, weekly payroll record showing the employee full name, address, social security number, work classification, amount paid per hour, straight time, overtime and holiday hours worked each day and weekly totals, the actual per diem wages paid to each person employed for the Work, and the gross/net wages paid for this Project/all projects, as well as the Contractor name and address, Project name and location, and dates of payroll. If payments are made to any third party trust, funds, or plans for health and welfare, pension or vacation trusts, those payments must be stated on the Certified Payroll Record. The basic wage rate paid per hour plus the employer contributions for benefits, including training fund contributions, must at least equal the prevailing wage rate for that classification.

The Contractor must maintain and submit one (1) copy of its Certified Payroll Records and those of its Subcontractors weekly with Contractor's application for payment. The City requires Contractor to submit to the City each week, no later than seven (7) Calendar Days after the payday for the week covered, the Certified Payroll Records of Contractor and its Subcontractors of every tier. If there is no Work on a given week or on a given day, the Certified Payroll Record must indicate "no work" for that week or day(s). The Certified Payroll Records must account for each day of the week including Saturdays, Sundays and holidays. Contractor and Subcontractors of every tier must write "final" on the last submitted Certified Payroll Record for the Project.

The Certified Payroll Records must be verified by a written declaration made by a person with authority to represent the reporting entity, under penalty of perjury, that the information contained in the payroll record is true and correct and that the reporting entity has complied with the requirements of California Labor Code §§ 1771, 1811, and 1815 for any Work performed by his, her or its employees on the Project.

In addition, the City reserves the right to require the Contractor to provide monthly certified payroll records of local hiring and non-local hiring to ascertain local participation and shall allow the City and City's staff to conduct onsite visits upon request to ascertain local hiring participation.

Contractor agrees that submission of Certified Payroll Records as well as all related or subsequent requests for supporting document made by the City shall be a condition precedent to Contractor's receipt of a progress, final, or retention payment. The City shall withhold any portion of the progress, final, or retention payment up to and including the entire payment until the Certified Payroll Records requirement is met by the Contractor or its Subcontractor. If the Contractor or any Subcontractor is determined to have failed to pay workers in compliance with the applicable prevailing wage sections of the Labor Code, the City shall continue to withhold progress, final, or retention payments until sufficient funds have been withheld for payment of wages to workers and all applicable penalties.

7-2.3.7 Making Certified Payroll Records Available Upon Request

Pursuant to Labor Code § 1776, in addition to its obligation to deliver certified payroll records to the Owner on a weekly basis as set forth above, the Contractor must also make payroll records available for inspection at all reasonable hours at the principal office of the Contractor on the following basis: (i) a certified copy of an employee's payroll record must be made available for inspection or furnished to such employee or his/her authorized representative on request; (ii) a certified copy of all payroll records must be made available for inspection or furnished upon request to the Owner, the Division of Labor Standards Enforcement and the Division of Apprenticeship Standards of the Department of Industrial Relations; (iii) a certified copy of payroll records must be made available upon request to the public for inspection or copies thereof made; provided, however, that a request by the public must be made through either the City, the Division of Apprenticeship Standards, or the Division of Labor Standards Enforcement. If the requested payroll records have not been previously provided to the City, the Division of Apprenticeship Standards or the Division of Labor Standards Enforcement, the requesting party must, prior to being provided the records, reimburse the cost of preparation by the Contractor, Subcontractors and the entity through which the request was made; and the public may not be given access to such records at the principal office of the Contractor; (iv) the Contractor must file a certified copy of the payroll records with the entity that requested such records within **ten (10) Calendar Days** after receipt of a written request; and (v) any copy of records made available for inspection as copies and furnished upon request to the public or any public agency by the City, the Division of Apprenticeship Standards or the Division of Labor Standards Enforcement shall be marked or obliterated in such a manner as to prevent disclosure of an individual's name, address and social security number. The name and address of the Contractor or any Subcontractor, of any tier, performing a part of the Work must not be marked or obliterated. The Contractor must inform the Owner of the location of payroll records, including the street address, city and county and must, within **five (5) Working Days,** provide a notice of a change or location and address.

7-2.3.8 Forfeiture for Failure to Comply with Written Record Request Laws

The Contractor or Subcontractor shall have **ten (10) Calendar Days** in which to comply, subsequent to receipt of written request regarding Certified Payroll Records or Basic Payroll Records. In the event Contractor or a Subcontractor fails to strictly comply after such 10-day period, the Contractor or Subcontractor shall, as a penalty to the State or the Owner, forfeit One Hundred Dollars ($100.00) for each Calendar Day, or portion thereof, for each worker, until strict compliance is effectuated. Upon the request of the Division of Apprenticeship Standards or the Division of Labor Standards Enforcement, these penalties shall be withheld from any portion of the Contract Price then or thereafter due the Contractor. A Contractor is not subject to a penalty assessment pursuant to this paragraph due to the failure of a Subcontractor to comply with this section.

7-2.3.9 Hours of Work

7-2.3.9.1 Limits on Hours of Work

Pursuant to Labor Code § 1810, eight (8) hours of labor shall constitute a legal day's work. Pursuant to Labor Code § 1811, the time of service of any worker employed at any time by the Contractor or by a Subcontractor, of any tier, upon the Work or upon any part of the Work, is limited and restricted to eight (8) hours during any one Calendar Day and forty (40) hours during any one calendar week, except as hereafter provided. Notwithstanding the foregoing provisions, Work performed by employees of Contractor or any Subcontractor, of any tier, in excess of eight (8) hours per day and forty (40) hours during any one week, shall be permitted upon compensation for all hours worked in excess of eight (8) hours per day at not less than one and one-half (1½) times the basic rate of pay.

7-2.3.9.2 Penalty for Excess Hours

Pursuant to Labor Code §§ 1813 and 1815, the Contractor shall pay to the State or the Owner a penalty of Twenty-five Dollars ($25.00) for each worker employed in the execution of the Contract by the Contractor or any Subcontractor, of any tier, for each Calendar Day during which such worker is required or permitted to work more than eight (8) hours in any Calendar Day and forty (40) hours in any one calendar week, in violation of the provisions of the California Labor Code, unless compensation to the worker so employed by the Contractor is not less than one and one-half (1½) times the basic rate of pay for all hours worked in excess of eight (8) hours per day.

7-2.3.9.3 Contractor Responsibility For Cost of Excess Hours

Any Work performed by workers necessary to be performed after regular working hours or on Sundays or other holidays must be performed without adjustment to the Contract Price or any other additional expense to the City.

7-2.3.10 Responsibility for Subcontractors' Payment of Prevailing Wages

Pursuant to Labor Code § 1774, the Contractor is responsible for ensuring that all Subcontractors of any tier comply with requirements for payment of prevailing wages. Contractor is responsible for Labor Code violations by Subcontractors of any tier. The agreement executed between the Contractor and each Subcontractor must contain a copy of the provisions of Labor Code §§ 1771, 1775, 1777.5, 1813, and 1815, at a minimum. Contractor must monitor each Subcontractor's payment of prevailing wage rates. Upon becoming aware of the failure of any

Subcontractor of any tier to pay its workers the specified prevailing wage, the Contractor must diligently take action to halt and rectify the failure, including, without limitation, retaining sufficient funds due to the Subcontractor to cover the underpayment. Before making final payment to any Subcontractor, the Contractor must obtain an affidavit from the Subcontractor, signed under penalty of perjury, which states that the Subcontractor has paid the specified, determined prevailing wage rate to its employees for the Project, as well as any amounts due pursuant to Labor Code § 1813. Contractor must provides copies of such affidavits to the Owner and provide Contractor's affidavit that it has paid the specified, determined prevailing wage rate to its employees for the Project, as well as any amounts due under Labor Code § 1813.

7-2.3.11 Statement of Employer Payments

Within **five (5) Calendar Days** of the City's request, the Statement of Employer Payments **(DSLE Form PW 26)** must be completed and submitted to the City by each Contractor and Subcontractor who pays benefits to a third party trust, plan or fund for health and welfare benefits, vacation funds or makes pension contributions. The form must contain, for each worker classification, the fund or trust name, address, administrator, and amount per hour contributed and frequency of contributions. Training fund contributions must also be reported on this form. In February and August of each year during the Project, the Contractor and Subcontractors of any tier must verify changes in wage rates for any trade classifications used on the Project.

7-2.3.12 Apprentices

7-2.3.12.1 Apprenticeship Committee Contract Award Information

Pursuant to Labor Code § 1777.5 and Title 8 California Code of Regulations § 230, Contractor and Subcontractors of any tier who are not already approved to train by an apprenticeship program sponsor must, within ten (10) Calendar Days of signing the Contract or Subcontract, as applicable, but in any event prior to the first day in which the Contractor has workers employed on the Project, must submit contract award information. This information may be submitted on a Public Works Contract Award Information form (DAS form 140). The contract award information must be provided to the appropriate local apprenticeship committees whose geographic area of operation include the area of the Project and can supply apprentices to the Project.

7-2.3.12.2 Employment of Apprentices

Labor Code § 1777.5 and Title 8 California Code of Regulations § 200 *et seq.* provide detailed requirements for employing apprentices on public works. The responsibility of complying with Section 1777.5 and the regulations lies exclusively with the Contractor. When Contractor or Subcontractor employs workers in any Apprenticeable Craft or Trade, the Contractor and Subcontractor must employ apprentices in at least the ratio set forth in Labor Code Section 1777.5.

Every apprentice employed to perform any of the Work must be paid the prevailing rate of per diem wages for apprentices in the trade to which such apprentice is registered, and such individual must be employed only for the work of the craft or trade to which such individual is registered.

Only apprentices, as defined in Labor Code § 3077, who are in training under apprenticeship standards and written apprenticeship agreements under California Labor Code § 3070 et seq. are

eligible to be employed for the Work. The employment and training of each apprentice shall be in accordance with either of the following:

a. The apprenticeship standards and apprentice agreements under which such apprentice is training; or

b. The rules and regulations of the California Apprenticeship Council, including regulations Section 230.1(c), which requires that apprentices employed on public projects can only be assigned to perform work of the craft or trade to which the apprentice is registered and that the apprentices must at all times work with or under the direct supervision of journeyman/men.

7-2.3.12.3 Apprenticeship Certificate and Request for Dispatch of Apprentices

a. When the Contractor or any Subcontractor of any tier in performing any of the Work employs workers in any Apprenticeable Craft or Trade, as defined in **Section 7-2.3.12.4** below, the Contractor and such Subcontractor may apply to the Joint Apprenticeship Committee administering the apprenticeship standards of the craft or trade in the area of the site of the Work for a certificate approving the Contractor or such Subcontractor under the apprenticeship standards for the employment and training of apprentices in the area or industry affected, provided, however, that the approval as established by the Joint Apprenticeship Committee or Committees shall be subject to the approval of the Administrator of Apprenticeship. The Joint Apprenticeship Committee or Committees, subsequent to approving the Contractor or Subcontractor, shall arrange for the dispatch of apprentices to the Contractor or such Subcontractor in order to comply with California Labor Code § 1777.5. There shall be an affirmative duty upon the Joint Apprenticeship Committee or Committees, administering the apprenticeship standards of the crafts or trades in the area of the site of the Work, to ensure equal employment and affirmative action and apprenticeship for women and minorities. Contractors or Subcontractors shall not be required to submit individual applications for approval to local Joint Apprenticeship Committees provided they are already covered by the local apprenticeship standards.

b. Contractors who are not already approved to train apprentices must request dispatch of required apprentices from one of the applicable Apprentices Committees whose geographic area of operation includes the site of the Project by giving the committee actual notice of at least forty-eight (48) hours (excluding Saturdays, Sundays and holidays) before the date on which one or more apprentices are required. Contractors and Subcontractors may use **DAS form 142** to make the request for apprentices. However, if a non-signatory contractor declines to abide by and comply with the terms of a local committee's standards, the Apprenticeship Committee shall not be required to dispatch apprentices to such contractor. Conversely, if in response to a written request, an Apprenticeship Committee does not dispatch any apprentice to a contractor who has agreed to employ and train apprentices in accordance with either the Apprenticeship Committee's Standards or the California Apprenticeship Counsel Regulations (Title 8, Section 230 *et seq.*) within 72 hours of such request (excluding Saturdays, Sundays and holidays) the contractor shall not be considered in violation of Section 230.1 as a result

of failure to employ apprentices for the remainder of the Project, provided the contractor has made the request in enough time to meet the required ratio. If an Apprenticeship Committee dispatches fewer apprentices than the Contractor or Subcontractor requested, the Contractor or Subcontractor shall be considered in compliance if the contractor employs those apprentices who are dispatched, provided that, where there is more than one Apprenticeship Committee able and willing to unconditionally dispatch apprentices, a Contractor or Subcontractor who is not a participant in an apprenticeship program has requested dispatch from at least two committees.

7-2.3.12.4 Ratio of Apprentices to Journeymen

a. The ratio of Work performed by apprentices to journeymen, who shall be employed in the Work, may be the ratio stipulated in the apprenticeship standards under which the Joint Apprenticeship Committee operates, but in no case shall the ratio be less than one hour of apprentice work for every five hours of labor performed by a journeyman, except as otherwise provided in California Labor Code § 1777.5. The ratio of apprentice work to journeyman work shall apply during any day or portion of a day when any journeyman is employed at the site of the Work and shall be computed on the basis of the hours worked during the day by journeymen so employed. Any Work performed by a journeyman in excess of eight hours per day or 40 hours per week shall not be used to calculate the ratio. The Contractor must employ apprentices for the number of hours computed as above before the end of the Contract or subcontract, as applicable. The Contractor must, however, endeavor, to the greatest extent possible, to employ apprentices during the same time period that the journeymen in the same craft or trade are employed at the site of the Work. Where an hourly apprenticeship ratio is not feasible for a particular craft or trade, the Division of Apprenticeship Standards, upon application of a Joint Apprenticeship Committee, may order a minimum ratio of not less than one apprentice for each five journeymen in a craft or trade classification.

b. The Contractor or any Subcontractor covered by this Paragraph and California Labor Code § 1777.5, that has agreed to be covered by an Apprenticeship Program's standards, upon the issuance of the approval certificate, or that has been previously approved in such craft or trade, must employ the number of apprentices or the ratio of apprentices to journeymen stipulated in the apprenticeship standards, but in no event less than the 1-to-5 hourly ratio. Upon proper showing by the Contractor that it employs apprentices in such craft or trade in the State of California on all of its contracts on an annual average of not less than one apprentice to each five journeymen, the Division of Apprenticeship Standards may grant a certificate exempting the Contractor from the 1-to-5 hourly ratio as set forth in this Paragraph and California Labor Code § 1777.5.

7-2.3.12.5 Exemption

The requirement to employ apprentices shall not apply to contracts of general contractors, or to contracts of specialty contractors not bidding for work through a general or prime contractor, involving less than Thirty Thousand Dollars ($30,000.00) or **twenty (20) Working Days.** The term

"Apprenticeable Craft or Trade," as used herein shall mean a craft or trade determined as an Apprenticeable occupation in accordance with rules and regulations prescribed by the Apprenticeship Council.

7-2.3.12.6 Contributions to Trust Funds

The Contractor or any Subcontractor of any tier who performs any of the Work by employment of journeymen or apprentices in any Apprenticeable Craft or Trade shall contribute to the California Apprenticeship Council in the same amount that the Director determines is the prevailing amount of apprenticeship training contributions in the area of the Project. Contractor or any Subcontractor, of any tier, may take as a credit for payments to the Council any amounts paid by the Contractor or Subcontractor to an approved apprenticeship program that can supply apprentices to the Project. Contractors who do not contribute to an apprenticeship program must submit their contributions to the California Apprenticeship Council. Training Fund contributions are due and payable on the 15th day of the month for work performed during the preceding month. Training contributions to the California Apprenticeship Council shall be paid by check and shall be accompanied by a **Completed Training Fund Contribution form (CAC-2).** Contractors who contribute to an apprenticeship program are entitled to a full credit in the amount of those contributions. The Division of Labor Standards Enforcement is authorized to enforce the payment of such contributions to such fund(s) as set forth in California Labor Code § 227. Such contributions shall not result in an increase in the Contract Price.

7-2.3.12.7 Contractor's Compliance

The responsibility of compliance with this Section 7-2.3.12 for all Apprenticeable Trades or Crafts is solely and exclusively that of the Contractor. All decisions of the Joint Apprenticeship Committee(s) under this Section 7-2.3.12 are subject to the provisions of California Labor Code § 3081. In the event the Contractor willfully fails to comply with the provisions of this Paragraph and California Labor Code § 1777.5, pursuant to California Labor Code § 1777.7, the Contractor shall: (i) be denied the right to bid on any public works contract for a period of one (1) year from the date the determination of noncompliance is made by the Administrator of Apprenticeship; and (ii) forfeit, as a civil penalty, One Hundred Dollars ($100.00) for each Calendar Day of noncompliance. Notwithstanding the provisions of California Labor Code § 1727, upon receipt of such determination, the City shall withhold such amount from the Contract Price then due or to become due. Any such determination shall be issued after a full investigation, a fair and impartial hearing, and reasonable notice thereof in accordance with reasonable rules and procedures prescribed by the California Apprenticeship Council. Any funds withheld by the City pursuant to this Paragraph shall be deposited in the fund that funded the Project unless otherwise specified by the City Engineer. The interpretation and enforcement of California Labor Code §§ 1777.5 and 1777.7 shall be in accordance with the rules and procedures of the California Apprenticeship Council.

7-2.4 Employment of Minors

The Contractor shall not employ or engage any minor less than 16 years of age for the purpose of building or construction work of any kind (Title 8 CAC 11701, LC 1294). When minors between 16 and 18 years of age are employed or engaged in building or construction work, the Contractor must obtain permits to work and permits to employ minors from school authorities in the school district in which the minor resides or attends school (ED 49110 to 49113, 49131, & 49160). Any Contractor that hires a minor of 16 years of age or older who is a high school graduate or who has been awarded a certificate of proficiency is exempt from the permit requirements (ED 49101).

The Contractor shall keep on file all permits to work and permits to employ, records showing the names, ages (dates of birth) and address of all minors employed, along with payroll records for at least three years (ED 49161, LC 1174, 1175, 1299). The minors' records are to be open at all times for inspection by school attendance officers, members of the Industrial Welfare Commission, and designees, probation officers, officers of the Superintendent at Public Instruction, and officers of the Division of Labor Standards Enforcement (ED 49164, 49181, LC 1174, 1299). The Contractor shall submit to the City a copy of Permits to Work and Permits to Employ or proof of graduation or certificate of proficiency before any minor is allowed to work.

Failure to comply with the provisions of the child labor laws may cause the imposition of criminal and civil sanctions.

7-2.5 Labor Nondiscrimination

Pursuant to Labor Code Section 1735, no discrimination shall be made in the employment of persons upon public works because of the race, religious creed, color, national origin, ancestry, physical disability, mental disability, medical condition, marital status, or sex of such persons, except as provided in Section 12940 of the Government Code, and every Contractor for public works violating Labor Code Section 1735 is subject to all the penalties imposed for a violation of Division 2, Part 7, Chapter 1 of the Labor Code.

7-2.5.1 During the performance of this Contract, the Contractor and its Subcontractors shall not unlawfully discriminate against any employee or applicant for employment because of race, religion, color, national origin, ancestry, physical disability, mental disability, medical condition, marital status, age (over 40) or sex. Contractors and Subcontractors shall ensure that the evaluation and treatment of their employees and applicants for employment are free of such discrimination. Contractors and Subcontractors shall comply with the provisions of the California Fair Employment and Housing Act (CGC 12900 et seq.) and the applicable regulations promulgated thereunder (California Code of Regulations, Title 2, Section 7285.0 et seq.). The applicable regulations of the Fair Employment and Housing Commission implementing Government Code Section 12990, set forth in Title 2, Division 4, Chapter 5 of the California Code of Regulations are incorporated into this Contract by reference and made a part hereof as if set forth in full. The Contractor and its Subcontractors shall give written notice of their obligations under this clause to labor organizations with which they have a collective bargaining or other agreement.

7-2.5.2 This Contractor shall include the nondiscrimination and compliance provisions of this Section 7-2.5 in all subcontracts to perform Work under the Contract.

7-2.5.3 These provisions are applicable to all Contractors and Subcontractors having a construction Contract or subcontract of $5,000 or more:

1. As used herein:

    a. "Administrator" means Administrator, Office of Compliance Programs, California Department of Fair Employment and Housing, or any person to whom the Administrator delegates authority;

    b. Minority" includes:
        i. Black (all persons having primary origins in any of the black racial groups of Africa, but not of Hispanic origin);

ii. Hispanic (all persons of primary culture or origin in Mexico, Puerto Pico, Cuba, Central or South America or other Spanish derived culture or origin regardless of race);

iii. Asian/Pacific Islander (all persons having primary origins in any of the original peoples of the Far East, Southeast Asia, the Indian Subcontinent or the Pacific Islands); and

iv. American Indian/Alaskan Native (all persons having primary origins in any of the original peoples of North America and who maintain culture identification through tribal affiliation or community recognition).

2. Whenever the Contractor or any Subcontractor subcontracts a portion of the Work, it shall physically include in each subcontract of $5,000 or more, the nondiscrimination clause in this Contract directly or through incorporation by reference.

3. The Contractor shall implement the specific nondiscrimination standards provided in paragraph 6(a) through (e) of this Section 7-2.5.3.

4. Neither the provisions of any collective bargaining agreement, nor the failure by a union with whom the Contractor has a collective bargaining agreement, to refer either minorities or women, shall excuse the Contractor's obligations under this Section 7-2.5.3, Government Code Section 12990, or the regulations promulgated pursuant thereto.

5. In order for the nonworking training hours of apprentices and trainees to be counted, such apprentices and trainees must be employed by the Contractor during the training period, and the Contractor must have made a commitment to employ the apprentices and trainees at the completion of their training, subject to the availability of employment opportunities. Trainees must be trained pursuant to training programs approved by the U.S. Department of Labor or the California Department of Industrial Relations.

6. The Contractor shall take specific actions to implement its nondiscrimination program. The evaluation of the Contractor's compliance with this Section 7-2.5.3 shall be based upon its effort to achieve maximum results from its actions. The Contractor must be able to demonstrate fully its efforts under steps (a) through (e) below.

   a. Ensure and maintain a working environment free of harassment, intimidation, and coercion at all sites, and at all facilities at which the Contractor's employees are assigned to work. The Contractor shall specifically ensure that all foremen, superintendents, and other on-site supervisory personnel are aware of and carry out the Contractor's obligations to maintain such a working environment, with specific attention to minority or female individuals working at such sites or in such facilities.

   b. Provide written notification within seven days to the director of DFEH when the union or unions with which the Contractor has a collective bargaining agreement has not referred to the Contractor a minority person or woman sent by the Contractor, or when the Contractor has other information that the

union referral process has impeded the Contractor's efforts to meet its obligations.

c. Disseminate the Contractor's equal employment opportunity policy by providing notice of the policy to unions and training, recruitment and outreach programs and requesting their cooperation in assisting the Contractor to meet its obligations; and by posting the company policy on bulletin boards accessible to all employees at each location where construction work is performed.

d. Ensure all personnel making management and employment decisions regarding hiring, assignment, layoff, termination, conditions of work, training, rates of pay or other employment decisions, including all supervisory personnel, superintendents, general foremen, on-site foremen, etc., are aware of the Contractor's Equal Employment Opportunity Policy and obligations, and discharge their responsibilities accordingly.

e. Ensure that seniority practices, job classifications, work assignments and other personnel practices, do not have a discriminatory effect by continually monitoring all personnel and employment related activities, to ensure that the equal employment related activities, the employment opportunity policy, and the Contractor's obligations under these Specifications are being carried out.

7. Contractors are encouraged to participate in voluntary associations that assist in fulfilling their equal employment opportunity obligations. The efforts of a Contractor association, joint contractor-union, contractor-community, or other similar group of which the Contractor is a member and participant, may be asserted as fulfilling any one or more of its obligations under this Section 7-2.5.3 provided that the Contractor actively participates in the group, makes every effort to assure that the group has a positive impact on the employment of minorities and women in the industry, ensures that the concrete benefits of the program are reflected in the Contractor's minority and female workforce participation, and can provide access to documentation which demonstrates the effectiveness of actions taken on behalf of the Contractor. The obligation to comply, however, is the Contractor's.

8. The Contractor is required to provide equal employment opportunities for all minority groups, both male and female, and all women, both minority and non-minority. Consequently, the Contractor may be in violation of the Fair Employment and Housing Act (CGC Section 12900 et seq.) if a particular group is employed in a substantially disparate manner.

9. Establishment and implementation of a bona fide Affirmative Action Plan pursuant to Title 2 California Code of Regulations Section 8104(b) shall create a rebuttal presumption that a Contractor is in compliance with the requirements of Government Code Section 12990 and its implementing regulations.

10. The Contractor shall not use the nondiscrimination standards to discriminate against any person because of race, color, religion, sex, national origin, ancestry, physical disability, mental disability, medical condition, marital status, or age over 40.

11. The Contractor shall not enter into any subcontract with any person or firm decertified from state Contracts pursuant to Government Code Section 12990.

12. The Contractor shall carry out such sanctions and penalties for violation of this Section 7-2.5.3 and the nondiscrimination clause, including suspension, termination and cancellation of existing subcontracts as may be imposed or ordered pursuant to Government Code Section 12990, and its implementing regulations by the awarding agency. Any Contractor who fails to carry out such sanctions and penalties shall be in violation of this Section 7-2.5.3 and Government Code Section 12900.

13. The Contractor shall designate a responsible official to monitor all employment related activity to ensure that the company's equal employment opportunity policy is being carried out, to submit reports relating to the Provisions hereof as may be required by OCP and to keep records. Records shall at least include for each employee the name, address, telephone numbers, construction trade, union affiliation, if any, employee identification number when assigned, social security number, race, sex, status, (e.g., mechanic, apprentice trainee, helper, or laborer), dates of changes in status, hours worked per week in the indicated trade, rate of pay, and locations at which the work was performed. Records shall be maintained in any easily understandable and retrievable form; however, to the degree that existing records satisfy this requirement, the Contractor shall not be required to maintain separate records.

7-2.6 Posting of Signs

Contractor shall display the Project Identification Sign, the federal (if applicable) and state wage rate information, the "Equal Employment Opportunity is the Law" poster, and other required posters in a visible location at the Project site. The signs and posters shall be mounted in an acceptable manner and constructed as specified.

7-3 LIABILITY INSURANCE

Delete Section 7.3 in its entirety. See Paragraph 7 of the Agreement for insurance requirements.

7-4 WORKERS' COMPENSATION INSURANCE

Delete Section 7.4 in its entirety. See Paragraph 7 of the Agreement for insurance requirements.

7-5 PERMITS AND FEES

Work shall not be started until the Contractor has obtained all necessary licenses and permits. The Contractor shall obtain and pay for all permits and give all notices necessary and incident to the due and lawful prosecution of the Work and to the preservation of the public health and safety. Unless otherwise indicated within these City Special Provisions, fees will not be collected on those permits issued by the City for City-owned projects; some exceptions include Temporary Use Permit, City Business Licenses, etc. It is the responsibility of the Contractor to verify required permits and responsibility of payment therefor prior to Bid submittal.

7.5.1 Trench and Excavation Permits

Excavation shall not be started on any trench, vertical or sloping, that is five feet (5') or more in depth until the Contractor has obtained a permit from the State Division of Industrial Safety and

submitted a copy of said permit to the Engineer (LC 6500). Upon demand by the City or the State Division of Industrial Safety or representatives thereof, the Contractor shall produce the permit.

7-5.2 National Pollutant

The Contractor shall provide National Pollutant Discharge Elimination System (NPDES) permit training for Urban Runoff management to Contractor's employees and Subcontractors, if any. Each day that Contractor fails to provide Urban Runoff management training is a violation of the current version of the Regional Water Quality Control Board Order, and a breach of the Contract with the City. Contractor understands and agrees that NPDES permit violations are grounds for enforcement action by the Environmental Protection Agency, the State/Regional Water Resources Control Board, and the City, and may result in permit termination (stop work order), civil and criminal fines, and termination of the Contract. By submitting a Bid, the Contractor certifies to the City that it has trained its employees and Subcontractors, if any, for Urban Runoff management and included sufficient sums in the Bid Price to cover such costs of said training.

The Contractor is responsible for all clean up and payment of all fines levied as a result of any illegal discharge (as defined in the NPDES Permit) occurring as a result of the Contractor's Work and/or operations.

7-5.3 Right of Entry

The City shall provide any required rights of entry at no cost to the Contractor for Work on private property that is shown on the Plans. Such rights of entry do not relieve the Contractor of the need to provide, at its own cost, permits and insurance required of the Contractor by other agencies and organizations.

7-5.4 Licenses

The Contractor and Subcontractors shall obtain and incur all costs for licenses necessitated by their operations. The Contractor and all Subcontractors shall obtain and keep current a City of Moreno Valley Business License prior to commencement and throughout the duration of their Work.

7-6 THE CONTRACTOR'S REPRESENTATIVE

Add the following at the end of Section 7-6:

On a daily basis, the Contractor's Representative (or designated alternate) shall provide the Engineer a list of all labor, equipment, and materials used, and a summary of Work performed on the Project that day. The Contractor shall provide this information by the end of the Working Day to the City Inspector. If this information is not provided, the City will not process the Contractor's monthly progress payment.

The Contractor's Representative (or designated alternate) shall be present at the Project site at all times that Work is in progress. Work by Subcontractors will not be allowed in the absence of the Contractor's Representative (or designated alternate), unless previous arrangements are approved by the Engineer in writing. In the event a Subcontractor attempts to perform Work in the absence of the Contractor's Representative (or designated alternate), a STOP WORK NOTICE will be issued to the Subcontractor.

When Work is not in progress and during periods when Work is suspended, arrangements acceptable to the Engineer shall be made for any emergency Work that may be required.

7-8 WORK SITE MAINTENANCE

7-8.1 General

Delete the second paragraph of Section 7-8.1 and substitute the following:

Materials spilled along or on streets, roads, any public right of way, parking areas, or private property shall be removed completely and promptly.

When and as often as required by the Engineer, the Contractor shall furnish and operate self-loading motorized street sweeper equipped with a functional water spray system, to keep paved areas affected by the work clean and dust free. If the sweeper fails to keep the paved areas clean and dust free then the Contractor shall provide additional sweepers or stop the Work until the paved areas are clean and dust free. The use of water resulting in mud on paved areas will be not permitted.

Add the following at the end of Section 7-8.1:

All clean up costs shall be included in the various related items of Work and no additional compensation will be allowed as a result of suspension of Work for failure to comply with clean up orders.

Waste Management of the Inland Empire, a division of Waste Management, Inc. (Tel: 951.280.5400) has an exclusive franchise with the City of Moreno Valley for the collection, transportation, recycling, composting, and disposal of solid waste, green waste, special waste, and construction and demolition waste and for providing temporary bin/roll-off services for all commercial and residential premises within the City, pursuant to Moreno Valley Municipal Code Chapter 6.02, "Refuse Collection, Transfer and Disposal."

7-8.4.2 Storage in Public Streets

Delete the first paragraph of Section 7-8.4.2 and substitute the following:

Construction materials, stockpile and equipment shall not be stored in streets, roads, parking areas or any public right of way unless otherwise specified in the City Special Provisions or approved by the Engineer. All materials or equipment not installed or used in construction shall be stored at a location approved by the Engineer. All stockpile and storage areas shall be kept in a safe, neat, clean, and orderly fashion, and shall be restored to equal or better than original condition upon completion of work.

7-8.6.4 Dewatering

Add the following at the end of Section 7-8.6.4:

The Contractor shall maintain drainage within and through the Work areas.

7-8.7 Flood Hazards and Dry Weather Flow

Special attention is directed to possible flood hazards and nuisance water such as irrigation and other runoff. The Contractor shall be responsible for all personal injuries and for all damages to any portion of the Work occasioned by the above causes and the Contractor shall make good such injuries or damages at no cost to the City prior to Final Acceptance of the Work.

7-8.8 Vermin Control

At the time of Final Acceptance, structures entirely constructed under the Contract shall be free of rodents, insects, vermin, and pests. Necessary extermination work shall be arranged and paid for by the Contractor as part of the Work within the Contract Time and Contract Price, and shall be performed be a licensed exterminator in accordance with requirements of Applicable Law. The Contractor shall be liable for injury to persons or property and responsible for the elimination of offensive odors resulting from exterminating operations.

7-8.9 Protection of the Work

The Contractor shall protect all Work, materials, and equipment from damage from any cause whatsoever, and shall provide adequate and proper storage facilities during the progress of the Work. The Contractor shall provide for the safety and good condition of all Work until Final Acceptance of the Work by the City, and shall replace all damaged or defective Work, materials, and equipment before requesting Final Acceptance.

The Contractor is and shall be held responsible for the protection and correction of the Work of all trades from smears, splashes, stains, or damages that might occur during the progress of the Work.

The Contractor shall remove graffiti from all Work, materials, equipment, and signs within the project. Equipment, materials, or signs containing graffiti shall not be brought to the Project. Any graffiti found on Work, materials, equipment, or signs shall be cleaned or removed from the Project within 24 hours after discovery. The cost of graffiti removal shall be borne by the Contractor as part of the Contract Price.

7-8.10 Solid Waste Disposal and Recycling Report

The Contractor shall complete monthly Solid Waste Disposal and Recycling Reports and submit them to the City, as outlined in the Solid Waste Disposal and Recycling Report – Instructions (see Appendix). The cost of the reports shall be borne by the Contractor as part of the Contract Price.

7-9 PROTECTION AND RESTORATION OF EXISTING IMPROVEMENTS

Add the following at the end of Section 7-9:

Damaged traffic signal loop detectors must be replaced within seventy two (72) hours.

7-10 PUBLIC CONVENIENCE AND SAFETY

7-10.2.1.1 Street Closures, Detours, Barricades

Street closures are usually not allowed on City streets, and may be specifically prohibited as stipulated in the Contract Documents. Otherwise, the Contractor may request full street closure consideration from the Engineer. The Contractor shall submit a request for street closure to the Engineer. The Engineer may route the request through the various City departments for approval consideration. Once there is approval from all necessary departments, the matter will be brought before the City Council for approval consideration. The estimated time frame for department and City Council consideration is approximately six (6) weeks from the time the request is received. The

Contractor shall notify the Police, Fire, and Public Works Departments of, or serving, the City of Moreno Valley at least 48 hours in advance of closing, or partially closing, or of reopening, any street, alley, or other public thoroughfare, and shall comply with the requirements of said departments in respect thereto. If the telephone numbers herein below are changed, the Contractor is not relieved of the responsibility of notifying said departments.

The following telephone numbers are listed to assist the Contractors in compliance with these requirements:

Fire Department	Emergency 911
Business	951.486.6784
Police Department	Emergency 911
Business	951.486.6700
Public Works Department	951.413.3100
Transportation Engineering	951.413.3140
Maintenance & Operations	951.413.3160
Capital Projects	951.413.3130
Land Development	951.413.3120
Moreno Valley Utility	951.413.3500

In any site affected by peak hour traffic flows, no lane closure shall be allowed before 8:30 a.m. or after 4:00 p.m. unless approved in writing by the Engineer.

7-10.2.1.2 Traffic Controls

Traffic controls, including, but not limited to, vehicular and pedestrian traffic controls, maintenance of vehicular and pedestrian access, detours, and street closures shall be in accordance with the City Special Provisions; Traffic Control Plans; the current California MUTCD, Part 6, "Temporary Traffic Control"; the current "Work Area Traffic Control Handbook"; and Subsection 7-10, "Public Convenience and Safety" of the current "Standard Specifications for Public Works Construction," including all its subsequent amendments. Nothing in the City Special Provisions shall be construed as relieving the Contractor from his or her responsibility to provide for the safety and convenience of traffic and the public during construction.

In the event of conflict, the order of precedence shall be as follows:

1. City Special Provisions
2. Traffic Control Plans
3. California MUTCD (FHWA's MUTCD current edition as amended for use in California), Part 6, "Temporary Traffic Control"
4. Work Area Traffic Control Handbook. (WATCH)
5. Standard Specifications

Whenever vehicles or equipment are parked on the shoulder of a roadway within six feet (6') of a traffic lane, the shoulder area shall be closed with fluorescent traffic cones or portable delineators placed on a taper in advance of the parked vehicles or equipment, and along the edge of the pavement at twenty-five foot (25') intervals to a point not less than twenty-five feet (25') past the last vehicle or piece of equipment. A minimum of nine (9) cones or portable delineators shall be used for the taper. A W20-1 (Road Work) or W21-5b (Shoulder Work) sign shall be mounted on a telescoping flag tree with flags.

The Contractor shall install temporary railing (Type K-Modified) between any lane carrying public traffic and any excavation, obstacle, or storage area when the following conditions exist:

1. Excavations – Any excavation the near edge of which is twelve feet (12') or less from the edge of the lane, except:
   a. Excavations covered with sheet steel or concrete covers of adequate thickness to prevent accidental entry by traffic or the public.
   b. Excavations less than one foot deep.
   c. Trenches less than one foot wide for irrigation pipe or electrical conduit or excavations less than one foot in diameter.
   d. Excavations parallel to the lane for the purpose of pavement widening or reconstruction.
   e. Excavations in side slopes, where the slope is less steep or equal to 4:1.
   f. Excavations protected by existing barrier or railing.

2. Temporarily Unprotected Permanent Obstacles – Whenever the Work includes the installation of a fixed obstacle together with a protective system, such as a sign structure together with protective railing, and the Contractor elects to install the obstacle prior to installing the protective system; or whenever the Contractor, for his convenience and with permission of the Engineer, removes a portion of an existing protective railing at an obstacle and does not replace such railing complete in place during the same day.

3. Storage Areas – Whenever material or equipment is stored within twelve feet (12') of the lane and such storage is not otherwise prohibited by the Specifications.

7-10.2.2.1 General
Delete the first paragraph of Section 7-10.2.2.1 and substitute the following:

The Contractor shall submit a Traffic Control Plan signed by a Traffic Engineer to the City of Moreno Valley at or prior to the pre-construction meeting for approval by the Transportation Engineering Division.

7-10.3 Haul Routes
Delete Section 7-10.3 and substitute the following:

Unless otherwise specified in the City Special Provisions, haul routes shall conform to City-established truck routes, or as approved by the Traffic Engineer.

7-10.4 Safety

7-10.4.2 Safety Orders

Add the following at the end of Section 7-10.4.2:

Federal and State laws have established occupational safety and health standards with which all employers must comply. These laws require an employer to provide a safe place of employment (i.e., one that is reasonably free from danger to life or health).

The California Division of Industrial Safety (Cal/OSHA) issues citations if, during an inspection, it observes an employee exposed to an unsafe or unsanitary condition. Citations may

also be issued when employee exposure can be shown to have occurred even though not observed during an inspection. Every citation will identify the violation and the gravity of the violation (serious, general, or regulatory).

In addition to the authority to issue citations, Cal/OSHA has the authority to prohibit entry into an unsafe area and the use of unsafe equipment when an imminent hazard exists. (LC 6325) A violation of this type of order is a misdemeanor.

When an actual exposure cannot be demonstrated but a condition is found to exist that would be a violation if an exposure were to occur, then Cal/OSHA may issue an "Information Memorandum." To allow an employee to be exposed to a condition identified in an Information Memorandum constitutes a willful violation of the Safety Orders.

Should a Contractor receive a citation, shut-down (yellow tag), or an Information Memorandum, the Contractor shall notify the Engineer of such.

7-10.4.2.2 Excavation and Shoring Plan
Add the following at the end of Section 7-10.4.2.2

The Contractor shall comply with all applicable requirements of Labor Code Section 6705, and no requirements of that Section shall be construed to impose tort liability on the City or on any employee or officer of the City.

7-10.4.4 Hazardous Substances
Add the following at the end of Section 7-10.4.4

The Contractor shall take precautions not to spill or contaminate an area with hazardous material. Materials found to be hazardous substances pursuant to the Hazardous Substances Information and Training Act (Labor Code Section 6360 et seq.), such as epoxy resins, motor oils, and petroleum derivatives, shall be disposed of properly. If any hazardous material is spilled or contaminates an area, the Contractor shall notify the Riverside County Department of Health, Environmental Health Division, and have the spill or contaminated area cleaned up at the Contractor's expense. The hazardous materials shall be disposed of in accordance with the laws governing said material at a State or United States Environmental Protection Agency approved treatment, storage or disposal facility, or recycling facility. The Contractor shall give the City a copy of the Uniform Hazardous Waste Manifest promptly after disposition of the hazardous material. This provision shall not be construed to affect or limit any other liability, duty, or responsibility of the Contractor or other person with regard to safeguarding the health and safety of employees and other persons exposed to a toxic or hazardous material.

Any Work which involves digging trenches or other excavations that extend deeper than four feet (4') below the surface where discovery of hazardous waste or other unusual conditions may have an effect on the Work, the procedures shall be as follows:

1. The Contractor shall promptly, and before the following conditions are disturbed, notify the City in writing of any:

    a. Material that the Contractor believes may be material that is hazardous waste, as defined in Section 25117 of the Health and Safety Code, which is required to be removed to a Class I, Class II, or Class III disposal site in accordance with provisions of existing law.

b. Subsurface or latent physical conditions at the site differing from those indicated.

c. Unknown physical conditions at the site of any unusual nature, different materially from those ordinarily encountered and generally recognized as inherent in work of the character provided for in the contract.

2. The City shall promptly investigate the conditions, and if it finds that the conditions do materially so differ, or do involve hazardous waste, and cause a decrease or increase in the Contractor's cost of, or the time required for, performance of any part of the Work shall issue a Change Order pursuant to Section 3 "Changes in Work" of the General Provisions.

3. That, in the event that a dispute arises between the public entity and the Contractor whether the conditions materially differ, or involve hazardous waste, or cause a decrease or increase in the Contractor's cost of, or time required for, performance of any part of the Work, the Contractor shall not be excused from any scheduled completion date provided by the Contract, but shall proceed with all the Work to be performed under the Contract. The Contractor shall retain any and all rights provided either by Contract or by law which pertain to the resolution of disputes and protests between the contracting parties (PCC 7104).

7-10.4.6 Emergency Phone Numbers

The following emergency phone numbers are listed for the convenience of the Contractor to assist in complying with these requirements:

The Contractor shall keep a list of emergency phone numbers on the Project site. Whenever more than ten (10) employees are on the Project site at any time, said list shall be posted on a bulletin board, to be supplied and installed on the Project site by the Contractor, at his expense, in a location visible and accessible to all employees.

Ambulance Services 911
Box Springs Mutual Water Company 951.653.6419
City of Moreno Valley **Fire Department** .....911 or 951.486.6784
City of Moreno Valley **Police Department** .....911 or 951.486.6700
City of Moreno Valley, Public Works Department 951.413.3100
City of Moreno Valley, PW Operations & Facilities 951.413.3160
Eastern Municipal Water District (Integrated Operations Center).....951.928.3777 ext. 6265
Edgemont Community Services District (Albert A. Webb & Assoc.).....951.686.1070
Moreno Valley Community Hospital.....951.243.0811
27300 Iris Avenue, Moreno Valley
(2 miles east of Perris Boulevard)
Moreno Valley Unified School District.....951.485.5600 ext. 3775
Moreno Valley Utilities (electrical).....877.811.1888
Questar Southern Trails.....714.379.3376
5762 Bolsa Avenue, Suite 201
Huntington Beach, CA 92649

Riverside County Regional Medical Center 951.486.4000
26520 Cactus Avenue
(South of HWY 60)
Riverside Medical Clinic 951.683.6370
6405 Day Street
(South of HWY 60, Riverside, CA)
Riverside Transit Agency 909.684.0850
SBC (formerly Pacific Bell) 800.750.2355
Southern California Edison Company 800.611.1911
Southern California Gas Company (Distribution) 909.335.3919
Southern California Gas Company (Transmission) 213.244.2268
Sunesys 951.278.0400
Time Warner Communications 951.549.3977
Underground Service Alert 800.227.2600
United States Postal Service 951.656.3240
Val Verde Unified School District 951.940.6100
Valley Medical Group 951.242.9594
24490 Sunnymead Blvd., Moreno Valley
Verizon 800.483.4000
Waste Management 800.423.9986
Western Municipal Water District (answering service) 951.789.2960

The City does not warrant the completeness or accuracy of the list or the numbers.

7-10.4.7 Safety Responsibility

The Contractor shall be solely and completely responsible for the condition of the premises on which the Work is performed and for the safety of all persons and property on the site during performance of the Work. This requirement shall not be limited to normal working hours, but shall apply continuously.

The Contractor shall provide the Engineer with the Contractor's Injury and Illness Prevention Program and a site program five (5) Working Days before the pre-construction meeting. The Injury and Illness Prevention Program shall include the name and telephone number of the Project Safety Manager or Officer.

The Contractor shall correct all unsafe conditions immediately. The Engineer shall use the following guidelines when an unsafe condition is identified:

1. Imminent Hazard – a condition that if not corrected would most likely result in an accident causing severe or permanently disabling injury or death.

   When an Imminent Hazard is known to exist or when the Contractor either delays in correcting or permits repeated occurrences of an Imminent Hazard, the Engineer shall immediately order the Contractor verbally and in writing to suspend the operations affected and not permit the Work to resume until the Imminent Hazard has been corrected. The Contractor shall remove all personnel not necessary to make the corrections. The local Division of Industrial Safety office will be notified of the Imminent Hazard and of the action taken.

2. Dangerous Condition (Serious Hazard) – a condition that does not present an immediate danger to workers or the public, but if not corrected, could result in a disabling injury and possible death, or could develop into an Imminent Hazard.

   When a Dangerous Condition is known to exist, the Engineer shall notify the Contractor verbally and in writing of the conditions and allow a reasonable period for correcting the Dangerous Condition. The Contractor shall remove all personnel not necessary to make the corrections. If the Engineer is not certain of the remedial measures proposed or taken by the Contractor, then the City or Caltrans construction safety coordinator shall be consulted. If the Contractor does not correct the Dangerous Condition or if the condition is deteriorating into an Imminent Hazard, the Engineer shall suspend the affected operations and the local Division of Industrial Safety office will be notified.

3. Minor or Non-Serious Condition – condition that could result in minor or less serious injuries, or that are repetitive in nature or that may be classified as a threat to health.

   When a Minor or Non-Serious Condition is known to exist, the Engineer shall advise the Contractor verbally and in writing of the condition and of the necessity for eliminating it. If the Contractor fails to correct the problem or permits its repeated occurrence on subsequent operations, the Engineer shall suspend the affected operations.

The Contractor will not be allowed any additional compensation or extension of time for operations suspended due to unsafe conditions.

The Contractor shall immediately notify the City and document any observed defects or hazardous conditions in the vicinity of the Project site prior to, during, and after Project construction.

7-13 LAWS TO BE OBSERVED

Add the following at the end of Section 7-13:

If the Contractor observes that any portions of the Contract Documents are at variance with Applicable Law, Contractor shall promptly notify the Engineer in writing by RFI. If the Contractor performs any Work when the Contractor knows or should have reasonably known it would be contrary to Applicable Law, Contractor shall assume full responsibility therefor and shall bear all risks and costs (without adjustment to the Contract Price) directly or indirectly attributable to the correction of the Work. If Contractor fails to comply with Applicable Law, the City may (without prejudice to any of its other rights and remedies) issue an order suspending all or any part of the Work. If the Contractor is prevented, in any manner, from strict compliance with the Contract Documents due, directly or indirectly, to Applicable Law, the Contractor shall immediately notify the Engineer.

7-15 OWNER-OPERATOR LISTING

The Contractor and Subcontractors shall list all owner-operators on the project and certify owner-operator status by providing at least the following information:

1. Operator name as shown on all payrolls.
2. Business address of the owner-operator.
3. The owner-operator's social security number.

4. The truck/tractor license number, California identification truck number, weight, and number of axels. If equipment is used, the Contractor must provide a complete description of the equipment, make, model number, and include the dates the equipment was operated on the project.
5. Operator labor classification.
6. Hours worked by the owner-operator as reported on a daily basis.
7. Hourly rental rate paid for the owner-operator equipment.
8. Actual payments earned.

This information must be provided by the Contractor on the California Department of Transportation "Owner-Operator Listing" and "Owner-Operator Listing Statement of Compliance" forms, available online at http://www.dot.ca.gov/hq/construc/forms/cem2505.pdf. Certification will be accepted only from the Contractor or Subcontractor employing the owner-operator. The City will not accept certified payrolls or an Owner-Operator Listing directly from the owner-operator unless that owner-operator is a licensed contractor and is also an approved Subcontractor or recognized lower tier Sub-subcontractor. The Contractor shall submit the "Owner-Operator Listing Statement of Compliance" form weekly to the City, beginning within ten (10) Calendar Days after end of the first week worked. If there is a temporary break in the Work, then the Contractor shall submit an Owner-Operator Listing marked "no Work performed." When the owner-operator is no longer needed, then the word "final" shall be placed above the name of the owner-operator.

The information shown on the Owner-Operator Listing will be used to determine the hourly wage rate due by deducting the prevailing equipment rental rate as set forth in the California Department of Transportation publication entitled "Labor Surcharge and Equipment Rental Rates" from the gross hourly rate shown on the owner-operator listing (without mark-up). The determined hourly wage will be compared to the prevailing wage rate, plus fringe benefits, for the applicable craft or classification determine compliance.

The following factors are considered when determining whether an owner-operator is an independent contractor or an employee of the Contractor:

1. If review of payroll records show that deductions for social security taxes or State unemployment insurance taxes are withheld for the owner-operator, it is an indication that the operator is an employee rather than an independent contractor.

2. An employee interview of the owner-operator indicates that the owner-operator is in fact an employee.

3. Truck owner-operators should be the registered owner of the vehicle. The name of the driver should match the name of the registered owner on the Department of Motor Vehicle's registration.

4. If the legal owner is a firm or corporation, and the firm or corporation name is shown on the vehicle registration slip, the driver shall furnish evidence that they are leasing or purchasing the vehicle. If the owner-operator is unable to substantiate purchase or lease of the equipment, the City will disallow use of the owner-operator classification for this truck. Insurance for the vehicle shall be carried in the driver's name. The California identification (CA) number issued by the California Highway Patrol (CHP) shall be in the driver's name.

5. If the equipment owner-operator owns, is leasing, or financing the equipment other than a truck, then the operator shall furnish such evidence. If the owner-operator is unable to substantiate that they own, are purchasing, or leasing the equipment, the Engineer will disallow use of the owner-operator classification for the equipment. The Contractor must establish proof of ownership in cases where there is doubt as to the validity of the owner-operator designation.

7-16 EMPLOYEE INTERVIEW

The Contractor and Subcontractors shall make available all employees and owner operators for labor compliance interviews during work hours. Labor compliance interviews will be conducted by the Engineer or the California Department of Industrial Relations. The interview shall be conducted on the Work site at a place and for a duration that will permit privacy for the employee and cause the least amount of disruption to the ongoing Work. The Contractor's Representative shall not be present during the interview.

7-17 RECORD DRAWINGS

At the beginning of the Project, one bond copy or blueline print of each applicable Drawing will be issued by the City to the Contractor for use in preparing Record Drawings (also called "red line As Built Drawings").

Actual construction conditions shall be accurately and completely recorded on the bond copy or blueline prints as the Project progresses. The Contractor shall update the Record Drawings daily and review the Record Drawings with the Inspector weekly. If the Contractor fails to update Record Drawings, the monthly progress payment will not be processed until the Inspector is satisfied that the Record Drawings have been updated for the month the Contractor is requesting a progress payment. Upon completion of the Work, the Contractor shall sign the Record Drawings and shall submit same to the City's Inspector for review and approval. The 5% retention will not be released to the Contractor until the Record Drawings have been submitted to the City and approved. If the Contractor has not submitted an accurate copy of the Record Drawings within 30 Calendar Days after completion of the Work, the City reserves the right to have the Record Drawings prepared and to deduct all applicable costs incurred from the retention amount.

7-18 RIGHTS IN LAND AND IMPROVEMENTS

Nothing in the Specifications shall be construed to allow the Contractor to make any arrangement with any person to permit occupancy or use of any land, structure, or building within the Project site for any purpose whatsoever, either with or without compensation, in conflict with any agreement between the City and any owner, former owner, or tenant of the land, structure, or building.

The street right-of-way shall be used only for purposes that are necessary to perform the Work. The Contractor shall not occupy the right-of-way, or allow others to occupy the right-of-way, for purposes that are not necessary to perform the Work.

The Contractor shall secure at its own expense any area required for plant sites, storage of equipment or materials, or for other purposes if sufficient area is not available to the Contractor within the Contract limits, or at the sites designated on the plans outside the Contract limits.

For the aforementioned uses on private or public property (outside the public right-of-way), the Contractor shall apply for a temporary use permit (TUP) from the City's Planning Division. The Contractor shall not have use of the area until the TUP has been issued. Fees for the TUP will be the responsibility of the Contractor.

The City shall provide any required rights of entry at no cost to the Contractor for Work on private property that is shown on the Plans. Such rights of entry do not relieve the Contractor of the need to provide, at its own cost, permits and insurance required of the Contractor by other agencies and organizations.

SECTION 8 – FACILITIES FOR AGENCY PERSONNEL

Field office facilities for Agency Personnel will not be required on this project.

SECTION 9 – MEASUREMENT AND PAYMENT

9-1 MEASUREMENT OF QUANTITIES FOR UNIT PRICE OF WORK

9-1.1 General

Add the following at the end of Section 9-1.1:

All items of Work which are not designated on the Bid Schedule by the letters "F" or "LS" or words "Final" or "Lump Sum" shall have final pay quantities measured and paid for in accordance with the Standard Specifications and City Special Provisions.

9-2 LUMP SUM WORK

Delete the first sentence of Section 9-2 and substitute the following:

Items of Work which are designated by the letters "LS" or the words "Lump Sum" in the Estimated Quantities column of the Bid Schedule shall be paid for at the price indicated in the Bid, unless the dimensions of said Work, as shown on the Plans, are revised by the Engineer. If such dimensions are revised and such revisions result in an increase or decrease in the quantity of such Work, the final payment for said lump sum item will be revised in proportion to the change in dimensions authorized by Change Order.

Add the following at the end of Section 9-2:

The Contractor shall submit a Work item breakdown of the Bid, described in the second paragraph of Section 9-2 of the Standard Specifications, within 15 Calendar Days after award of Contract and/or at any other time as required by the Engineer.

No guarantee is made regarding the amount of Work required to complete a lump sum item of Work.

9-2.1 Progress Payments for Lump Sum Items of Work

The word "Complete" in the Estimated Quantities column of the Bid Schedule for a lump sum item of Work shall mean that payment for that item will only be made after all Work for that item has been completed. The "%" symbol in the Estimated Quantities column of the Bid Schedule for a lump sum item of Work shall mean that progress payments for that item will be allowed based on the percentage of completion as determined by the Engineer in each pay period, typically every 30 days (see Section 9-3.2).

9-3 PAYMENT

9-3.1 General

Delete the first sentence of Section 9-3.1 and substitute the following:

For unit items of Work, the estimated quantities listed on the Bid Schedule will not govern the final payment.

Delete the eighth paragraph of Section 9-3.1 and substitute the following:

Warranty periods shall be in accordance with Section 6-8, "Warranty of Work and Materials," of the City Special Provisions.

Add the following at the end of the ninth paragraph of Section 9-3.1:

In the event that a stop payment notice is filed with the City, an amount equal to 125% of the total of the amount claimed in the stop payment notice will be withheld by the City until the stop payment notice has been released. Alternatively, the Contractor may file with the City a bond, on a form approved by the City, executed by one or more corporate California Admitted surety insurers, in an amount equal to one hundred and twenty-five percent (125%) of the claim stated in the stop payment notice conditioned for the payment of any sum which the stop payment notice claimant may recover on the claim together with its costs of suit in the action. Upon the City's acceptance of such bond, the City shall not withhold money from the Contractor on account of the stop payment notice. The surety(ies) upon the stop payment notice release bond shall be different than, and jointly and severally liable to the stop payment notice claimant with, the Payment Bond surety(ies). A stop payment notice is not effective unless given before the expiration of whichever of the following time periods is applicable: (1) If a notice of completion, acceptance, or cessation is recorded, 30 days after the recordation; (2) If a notice of completion, acceptance, or cessation is not recorded, 90 days after cessation or completion.

Delete the tenth paragraph of Section 9-3.1 and substitute the following:

Not later than sixty (60) days from the date of Final Acceptance, the five percent (5%) deducted and retained from each progress estimate (see Section 9-3.2) by the City will be paid to the Contractor except such amounts as are required by law to be withheld by properly executed and filed notices to stop payment, or as may be authorized by the Contract to be further retained.

Contractor understands that Final Acceptance does not generally occur for one to two (1-2) weeks <u>after</u> Final Completion. Final Completion is the stage of performance of the Work when:

1. All Work required by the Contract Documents has been fully completed in compliance with the Contract Documents and all Applicable Laws including, but not limited to, correction or completion of all punch list items; and

2. Contractor has delivered to the City all closeout documentation required by the Contract Documents, including, but not limited to:

    a. Duly completed and executed forms of Conditional Waiver and Release Upon Final Payment and Declaration to Procure Final Payment from Contractor, Subcontractors of any tier, suppliers, and other persons eligible to file stop notices in connection with the Work, covering the <u>final</u> payment period;

    b. Duly completed and executed forms of Unconditional Waiver and Release Upon Final Payment and Declaration to Procure Final Payment from Contractor, Subcontractors of any tier, suppliers, and other persons eligible

to file stop notices in connection with the Work, covering the previous payment period;

c. Record Drawings / As-Built Drawings;

d. Consent of surety(ies) to final payment;

e. Special warranties, if applicable;

f. Operation and maintenance manuals and/or training manuals, if applicable; and

g. Any other documentation required by the Specifications.

9-3.1.1 Final Pay Quantities

When the estimated quantities for a specific portion of the Work are designated on the Bid Schedule as final pay quantities with the letter "F" or the word "Final," said estimated quantities shall be the actual quantities for which payment for such specific portion of the Work will be made, unless the dimensions of said portions of the Work shown on the Plans are revised by the Engineer. If such dimensions are revised and such revisions result in an increase or decrease in the quantities of such Work, the final quantities for payment will be revised in the amount represented by the changes in the dimensions authorized by Change Order.

The estimated quantities designated on the Bid Schedule with the letter "F" or the word "Final," are approximations only, and no guarantee is made that the quantities which can be determined by computations based on the details and dimensions shown on the Plans will equal the estimated quantities. No adjustment in the Contract Price will be made in the event that quantities based on subsequent computations or measurements do not equal the estimated final pay quantities.

9-3.2 Partial and Final Payment

Delete the first, second, third, and fourth paragraphs of Section 9-3.2 and substitute the following:

Except as otherwise provided in Section 9-2.1 "Progress Payments for Lump Sum Items of Work," the Contractor will be entitled to no more than one progress payment per month. Thirty (30) Calendar Days prior and as a condition to each progress payment, the Contractor shall submit to the Engineer a detailed estimate and invoice of the total quantity and value of Work completed since the cut-off date for the previous progress payment. The Engineer shall make the final determination as to the actual quantity and value of Work completed for which payment will be made. From each progress payment, **five percent (5%)** will be deducted and retained by the Owner until Final Payment is made in accordance with Section 9-3.1; the remainder, less the amounts needed to satisfy outstanding stop notices, will be paid to the Contractor.

No progress payment to the Contractor or its sureties will constitute a waiver of the liquidated damages specified in the Agreement. Liquidated damages, if any, will be deducted from earned progress payments due the Contractor.

This Contract is subject to the following provisions of California Public Contract Code Section 20104.50 which provides as follows:

a. (1) It is the intent of the Legislature in enacting this Section to require all local governments to pay their contractors on time so that these contractors can meet their own obligations. In requiring prompt payment by all local governments, the Legislature hereby finds and declares that the prompt payment of outstanding receipts is not merely a municipal affair, but is, instead, a matter of statewide concern.

   (2) It is the intent of the Legislature in enacting this article to fully occupy the field of public policy relating to the prompt payment of local governments' outstanding receipts. The Legislature finds and declares that all governmental officials, including those in local government, must set a standard of prompt payment that any business in the private sector that may contract for services should look toward for guidance.

b. Any local agency which fails to make any progress payment within thirty (30) days after receipt of an undisputed and properly submitted payment request from a Contractor or construction Contract shall pay interest to the Contractor equivalent to the legal rate set forth in subdivision (a) of § 685.010 of the Code of Civil Procedure.

c. Upon receipt of a payment request, each local agency shall act in accordance with both of the following:

   (1) Each payment request shall be reviewed by the local agency as soon as practicable after receipt of the purpose of determining that the payment request is a proper payment request;

   (2) Any payment request determined not to be a proper payment request suitable for payment shall be returned to the Contractor as soon as practicable, but not later than seven (7) days, after receipt. A request returned pursuant to this Section shall be accompanied by a document setting forth in writing the reasons why the payment request is not proper.

d. The number of days available to a local agency to make a payment without incurring interest pursuant to this Section shall be reduced by the number of days by which a local agency exceeds the seven-day return requirement set forth in paragraph (2) of subdivision (c), above.

e. For purposes of this Article:

   (1) A "local agency" includes, but is not limited to, a city, including a charter city, a county, and a city and county, and is any public entity subject to this part.

   (2) A "progress payment" includes all payments due Contractors, except that portion of the final payment designated by the Contract as retention earnings.

   (3) A payment request shall be considered properly executed if funds are available for payment of the payment request, and the Financial Officer of the local agency does not delay the payment due to an audit inquiry.

f. Each local agency shall require that this article, or a summary thereof, be set forth in the terms of any Contract subject to this article.

Add the following to the end of the fifth paragraph of Section 9-3.2:

At the request and sole expense of the Contractor, securities equivalent to the amount withheld shall be deposited with the City, or with a state or federally chartered bank in California as escrow agent, who shall pay such monies to the Contractor after satisfactory completion of the Contract. Securities eligible for investment under this section shall include those listed in Section 16430 of the Government Code, bank or savings and loan certificates of deposit, interest-bearing demand deposit accounts, and standby letters of credit. The Contractor shall be the beneficial owner of any securities substituted for monies withheld and shall receive any dividends and interest thereon. Alternatively, the Contractor may request that the City, at the expense of the Contractor, make payment of retention earned directly to the escrow agent. Notwithstanding the foregoing, such Contractor shall have thirty (30) Calendar Days following award of the Contract to submit a written request to the City to permit the substitution of securities for retention or payment to an escrow agent; failure to do so shall be deemed a waiver of the right. If the Contractor requests such substitution or payment to escrow, the City, Contractor, and escrow agent shall execute a separate agreement regarding such substitution or payment to escrow.

See Section 9-3.1 regarding timing of Final Payment.

9-3.3 Delivered Materials

Delete Section 9-3.3 in its entirety and substitute the following:

Unless included in the Bid Schedule, or unless otherwise called for in these City Special Provisions, no payment will be made for materials or equipment delivered but not incorporated in the Work.

9-4 PROMPT PROGRESS PAYMENT TO SUBCONTRACTORS

The Contractor's attention is directed to Business and Professions Code Sections 7108.5 and 7108.6 concerning prompt payment to Subcontractors and transportation charges submitted by dump truck drivers. The Contractor shall pay all Subcontractors for and on account of Work performed by such Subcontractors within seven (7) Calendar Days after receipt of progress payment from the City and within seven (7) Calendar Days after receipt of retention from the City. The Contractor shall pay all transportation charges submitted by a duly authorized motor carrier of property in dump truck equipment by the 20th day following the last day of the calendar month in which the transportation was performed, if the charges, including all necessary documentation, are submitted by the fifth day following the last day of the calendar month in which the transportation was performed.

If there is a good faith dispute over all or any portion of the amount due on a progress payment from the Contractor to a Subcontractor or dump truck driver, the Contractor may withhold no more than one hundred and fifty percent (150%) of the disputed amount.

9-5 RETENTION WITHHELD FROM SUBCONTRACTORS

9-5.1 This Contract is subject to the following provisions of Public Contract Code Section 7200, which provides as follows:

A. This section shall apply with respect to all Contracts entered into on or after January 1, 1999, between a public entity and a original Contractor, between an original

Contractor and a Subcontractor, and between all Subcontractors thereunder, relating to the construction of any public Work of improvement.

B. For purposes of this Section, "public entity" means the state, including every state agency, office, department, division, bureau, board, or commission, a city, county, city and county, including chartered cities and chartered counties, district, special district, public authority, political subdivision, public corporation, or nonprofit transit corporation wholly owned by a public agency and formed to carry out the purposes of the public agency.

C. In a Contract between the original Contractor and a Subcontractor, and in a Contract between a Subcontractor and any Subcontractor thereunder, the percentage of the retention proceeds withheld may not exceed the percentage specified in the Contract between the public entity and the original Contractor.

D. When a performance and payment bond is required in the solicitation for bids, item (C) above shall not apply to either of the following:

1. The original Contractor, if the Subcontractor fails or refuses to provide a performance and payment bond issued by an admitted surety insurer, to the original Contractor.

2. The Subcontractor, if a Subcontractor thereunder fails or refuses to provide a performance and payment bond issued by an admitted surety insurer, to the Subcontractor.

E. No party identified in item (C) above shall require any other party to waive any provision of this Section.

F. In the event that the Contractor elects to substitute securities in lieu of retentions, the Contractor may withhold from its Subcontractors, who have not elected to substitute securities in lieu of retentions, the amount of retentions that would have otherwise been withheld.

CITY SPECIAL PROVISIONS

PART 2
TECHNICAL PROVISIONS

PROJECT SPECIFIC SCOPE OF WORK

The project scope is for street improvements along Perris Boulevard from Ironwood Avenue to Manzanita Avenue in the City of Moreno Valley.

Description of Work

Base Bid:

The Project generally consists of, but is not limited to, the widening of Perris Boulevard from Ironwood Avenue to Manzanita Avenue. The proposed base bid work includes, but is not limited to, the construction of street improvements; traffic signal modifications; new traffic signal installation, pavement striping; drainage improvements; and retaining walls. Work items include, but are not limited to, pavement removals; grading; removal of curb and gutter; sidewalk; curb ramps; raised medians, asphalt concrete paving over aggregate base; modifications to existing drainage facilities; traffic signal poles, mast arms, and foundations; street lighting; thermoplastic pavement markings and paint striping; walls; and fencing.

The subject work will include coordination with utility purveyors having facilities in the project area, including, but not limited to, Southern California Edison (SCE), Moreno Valley Utility (MVU), Eastern Municipal Water District (EMWD), Verizon, Time Warner Cable, and Sunesys. The work will also include coordination with Riverside County Flood Control and Water Conservation District (RCFC&WCD).

From Ironwood Avenue to south of Kalmia Avenue, the existing pavement will remain protected in place. The east roadbed will be widened approximately 36 feet in two 450 foot segments and will join previously widened curb sections. The existing west curb alignment will be maintained, and new curb, gutter, and sidewalk will be constructed wherever absent. The Perris Boulevard and Ironwood Avenue intersection will be updated with new ADA compliant access ramps at the northeast corner.

From approximately 200 feet south of Kalmia Avenue to Jaclyn Avenue, the existing pavement will be removed and replaced. New medians will be constructed and the east roadbed will be widened. The existing west curb alignment will be maintained and new curb, gutter, and sidewalk will be constructed wherever absent. The traffic signal at the Perris Boulevard and Kalmia Avenue intersection will be modified to accommodate realigned curb return locations.

From Jaclyn Avenue to approximately 1,000 feet south of Manzanita Avenue, the existing pavement will be removed and replaced. New median will be constructed on a new roadway profile that will feature widening to both sides of the street. Two retaining walls will be constructed to the north of Robin Lane on the west side, to minimize slopes and avoid conflicts with existing private establishments. A new traffic signal will be installed at the intersection of Perris Boulevard and Pico Vista Way.

In addition to the "standard" 8-inch curb, gutter, and sidewalk, construction will involve new cross gutters, ADA access ramps, and slope embankments. Various improvements to private property, such as retaining walls, PCC steps, retaining curbs, fences, and gates, will also be constructed to accommodate the new roadway improvements.

In order to provide 100-year flood protection, a new 24-inch reinforced concrete pipe (RCP) will be constructed between Kalmia Avenue and Luxury Street. It will join an existing 27-inch stub-out previously provided by the Riverside County Flood Control and Water Conservation District. Various minor drainage improvements will be constructed, including PCC gutters, parkway culverts, curb drains, and yard drains.

The Contractor shall be familiar with the borings produced by Converse Consultants from 2007 located in Appendix K, Field Exploration.

Alternate 1:

In addition to the Base Bid, Alternate 1 consists of crack seal and grind and overlay work of the existing pavement to be protected in place from the Base Bid, from Ironwood Avenue to approximately 200 feet south of Kalmia.

Alternate 2:

In addition to the Base Bid, Alternate 2 consists of removing and replacing the existing pavement from Ironwood Avenue to Via Von Batsch.

Alternate 3:

In addition to the Base Bid, Alternate 3 consists of removing and replacing the existing pavement from Via Von Batsch to approximately 200 feet south of Kalmia Avenue.

Alternate 4:

In addition to the Base Bid, Alternate 4 consists of crack sealing and slurry sealing the existing pavement from the northern limits of the Base Bid (approximately 1,000 feet south of Manzanita Avenue) to Manzanita Avenue.

Alternate 5:

In addition to the Base Bid, Alternate 5 consists of constructing median hardscape for the new medians constructed as part of the Base Bid.

Alternate 6:

In addition to the Base Bid, Alternate 6 consists of crack sealing and slurry sealing the existing pavement to be protected in place from the Base Bid, from Ironwood Avenue to approximately 200 feet south of Kalmia.

Order of Work

Stage 1

The work to be completed in Stage 1 includes the construction of the retaining walls on the west side of Perris Boulevard between stations 85+70 and 92+40, curb and gutter, bringing the west parkway to finished grade from Robin Lane to approximately 1,000 feet south of Manzanita

Avenue, and any EMWD work within the Stage 1 work limits. This work will allow for Southern California Edison to relocate existing facilities onto new slopes. This stage also includes a portion of pavement construction just north of Ironwood Avenue that will be utilized to transition traffic during subsequent Stages. Imported fill will be needed for this stage.

Stage 2

The work to be completed in Stage 2 includes construction of improvements on the east side of the project, including but not limited to, roadway widening, curb and gutter, ADA access ramps, cross gutter and spandrels, drive approaches, private property improvements, all storm drain, and EMWD work within the Stage 2 work limits. The Contractor shall incorporate median curb construction as part of Stage 2 where possible without altering Traffic Control operations. The traffic signal at Pico Vista Way and Perris Boulevard shall be constructed in Stage 2.

Special attention is to be given to the Perris Boulevard and Kalmia Avenue intersection due to the increased traffic generated by the North Ridge Elementary School on the southeast corner of Perris Boulevard and Kalmia Avenue. This intersection shall be constructed as a first order of work in Stage 2; with parking on the south side of Kalmia Avenue being permitted for as long a duration as possible before the contract work is to be performed.

Stage 3

The work to be completed in Stage 3 includes construction of improvements on the west side of the project, including, but not limited to, roadway widening, curb and gutter, ADA access ramps, cross gutter and spandrels, drive approaches, private property improvements, storm drain, and EMWD work within the Stage 3 work limits. The Contractor shall incorporate median curb construction as part of Stage 3 where possible without altering Traffic Control operations.

All remaining work from the Stage 1 work area shall be completed in Stage 3.

Stage 4

The work to be completed in Stage 4, if awarded as part of the contract, includes construction of the unfinished hardscaped medians and the crack sealing and slurry sealing portions from approximately 1,000 feet south of Manzanita Avenue.

General

The Contractor shall establish the staging of work with the power pole and overhead facilities relocations work within the project limits. As necessary, workaround existing power poles, prior to their removal, shall be included in the staging of work. The Contractor shall coordinate with SCE, Verizon, Time Warner Cable, the Gas Company, other dry utility agencies, and EMWD to avoid conflict with their construction schedules.

All storm drain construction shall be completed prior to any pavement-related construction.
All work on private properties shall be completed as soon as possible without delay, but no longer than 25 working days, beginning once work has been initiated at said property. The property at 11480 Perris Boulevard will be allowed 35 working days due to the nature of the work involved with the construction of the Perris Boulevard and Kalmia Avenue intersection.

Temporary driveway access shall be maintained to all private garages and front doors at all times during construction. If a private property has multiple driveways, at least one shall remain open at all times unless both are needed to service different portions of the property.

The North Ridge Elementary School session is from August 14th, 2013 to June 13th, 2014 with a Bell Schedule of 7:20 a.m. to 2:25 p.m., Monday through Friday.

Traffic Control Requirements:

Traffic control shall conform to the requirements of Section 7-10 Public Convenience and Safety of these General Provisions and Standard Specifications, the Technical and Special Provisions of the project specifications, and the Street Improvement Plans for the subject project. As a minimum, the following requirements will apply.

All streets shall remain open to traffic at all times. The Contractor shall make provisions to allow local traffic access to the closed stages of construction on Perris Boulevard. The local traffic consists of, but is not limited to, residences, church congregations, post offices, meter readers, trash pickup, school buses, and emergency vehicles. The Contractor shall provide a smooth travelway and either a flagger and/or signing to direct traffic for church activities or both.

No reduction of the travelled way width shall be permitted on any City street during work days before 8:30 a.m. or after 3:30 p.m. No reduction of the travelled way width shall be permitted on weekends, holidays, or when active work is not being done, unless otherwise approved by the Engineer or as specified in "Traffic Control" of these Special Provisions. On Perris Boulevard, approximately 1,000 feet north of and south of Kalmia Avenue (adjacent to North Ridge Elementary School), no reduction in the travelled way shall be permitted after 2:20 p.m., or within the first hour after school ends, whichever is more stringent.

The Traffic Control Plans are the minimum requirements for traffic control. The Traffic Control Plans do not preclude the Contractor from providing additional traffic control.

If the Contractor elects to modify the Traffic Control Plans, the Contractor shall submit the revised Traffic Control Plans that are consistent with Chapter 5 of the Caltrans Traffic Manual and the WATCH manual or assigned and stamped by a California Registered Professional Traffic Engineer to the City for approval no later than fourteen (14) calendar days prior to the scheduled commencement of work. Comments and corrections will be returned to the Contractor within ten (10) working days.

The revised Traffic Control Plan shall be submitted on 24 inch x 36 inch blueprints, indicating the traffic handling and control requirements for the different types of work to be performed, including advance construction signs. The Contractor shall be responsible for the preparation of Plans as necessary for specific items of work.

The revised Traffic Control Plans shall indicate the traffic control requirements for the different types of work to be performed. The Contractor shall be responsible for the preparation of the revised Traffic Control Plans, as necessary, for specific items of work. The revised Traffic Control Plans shall be approved by the Engineer.

The Contractor shall comply with the most current requirements of the American Disabilities Act Standards (ADA) / California Code of Regulations Title 24 – Accessibility Regulations. The Contractor shall provide a minimum 5 foot wide path for pedestrian traffic through the construction site. If a pedestrian travel path is less than 5 feet wide, the Contractor shall provide passing spaces at intervals not to exceed 200 feet as specified in ADA regulations. If a pedestrian path through the construction site and within the street right of way is not possible, the Contractor shall lay out and maintain a safe and direct pedestrian path around the construction site within the public right of way. If there are any instances where pedestrians are required to get around or cross over an obstacle, the Contractor shall provide a flagger to escort/accompany/hold pedestrians as appropriate. All temporary and permanent access ramps, sidewalk, and pedestrian paths of travel shall meet ADA requirements and City of Moreno Valley standards and shall be shown on the Traffic Control Plan.

Special Work Hours

The hours of construction are as set forth in Section 6-7 Time of Completion of the General Provisions and Standard Specifications.

No reduction of the travelled way width shall be permitted on any City street during work days before 8:30 a.m. or after 3:30 p.m. No reduction of the travelled way width shall be permitted on weekends, holidays, or when active work is not being done, unless otherwise approved by the Engineer or as specified in "Traffic Control" of these Special Provisions. On Perris Boulevard, approximately 1,000 feet north of and south of Kalmia Avenue (adjacent to North Ridge Elementary School), no reduction in the travelled way shall be permitted after 2:20 p.m., or within the first hour after school ends, whichever is more stringent.

The City's furlough days are every Friday and inspection may not be available on Friday. The Contractor shall coordinate work requiring inspection with the engineer.

Schedule

Per section 6-1 of the General Provisions and Standard Specifications, the Contractor shall submit a proposed construction schedule for the entire work to the Engineer for review and approval five (5) working days prior to the Pre-Construction Meetings and revised schedules thereafter as required by the Engineer when the Contractor's activities differ or are expected to differ from the latest existing schedule. The Contractor shall submit to the City a monthly construction update or as requested by the Engineer to confirm project progress.

Southern California Edison (SCE) will be relocating its power poles and overhead lines along segments of Perris Boulevard. Portions of the existing power poles to be relocated will also have Time Warner Cable and Verizon aerial facilities which will also require relocation. EMWD, SCE, Time Warner Cable, and Verizon also have existing underground facilities within the project limits. These utility firms will also need to adjust their facilities to grade after the Contractor completes the street curb work; and, these firms may need to relocate portions of their underground facilities, which may be in conflict with the City's Roadway Improvements. The Contractor shall be responsible for coordinating all relocation activities, including working around existing poles prior to their removal, and shall incorporate these activities into project construction schedule and adjust their schedule according to changing field conditions, at no additional cost to the City.

Special Notifications

Due to the nature of the project, the following agencies need to be notified for coordination of activities:

- City of Moreno Valley Waste Management.....(951) 242-0421
- City of Moreno Traffic Signal Maintenance: Work involving any of the controlled intersections prior to installation of the traffic signal facilities and equipment. (Scott Duncan, Traffic Operations Supervisor).....(951) 413-3140
- Riverside County Flood Control and Water Conservation District (RCFC&WCD): Work on the Districts Facilities. (Henry Olivo).....(951) 955-1288
- Riverside Transit Agency (RTA): Work in and around all bus stops locations. (Sam Wattanachinda).....(951) 565-5122
- U.S. Postal Service .....(951) 656-3240
- City Emergency Services
  - Police .....(951) 486-6708
  - Fire Department.....(951) 486-6783
- Moreno Valley Unified School District Bus Service .....(951) 571-7500
- North Ridge Elementary School: Work adjacent to school and any work that impacts the school's operations or accessibility. (Administration).....(951) 571-4630
- Riverside Transit Agency.....(951) 684-1007

The following utility companies will be relocating facilities during the construction of this project. Coordination of work activities is necessary.

- Southern California Edison (SCE): Work involving street lights, conduit electrical service, pole relocation, schedule coordination; coordinate a pre-construction meeting with SCE prior to start of construction. (Willy Radford, Inspection)..... (951) 663-0321
- Verizon: The Contractor shall be responsible to arrange for and coordinate with Verizon for the relocation of its overhead lines as well as any relocations of existing underground Verizon facilities which may be in conflict with the City's project..... (951) 929-9412
- Time Warner: The Contractor shall be responsible to arrange for and coordinate with Time-Warner for the relocation of its overhead lines as well as any relocations of existing underground Time-Warner facilities which may be in conflict with the City's project..... (951) 243-3140
- Southern California Gas: Work in and around existing gas main on Perris Boulevard. The Gas Company may lower and reconstruct a portion of the existing gas main near Robin Lane.....(951) 243-3140
- Eastern Municipal Water District (EMWD): Coordinate any sewer and facility relocation and/or water adjustments in Nason Street; coordinate a pre-

construction meeting with EMWD prior to start of construction. (Aurora Fong)..... (951) 928-3777, ext. 4437

The Contractor shall be responsible to arrange for and coordinate with Southern California Edison (SCE) for SCE related relocation work. SCE work will include relocation of its power poles and overhead lines along Perris Boulevard (from Luxury to approximately 1,000 feet south of Manzanita Avenue), guy anchor adjustments to avoid conflicts with new improvements, new street lights installed throughout the project and signal related service feeds. SCE shall be allowed a minimum of 30 working days to perform their relocation work.

The Contractor shall be responsible to arrange for and coordinate with Verizon for Verizon related relocation work. Verizon work will include relocation of its facilities to the relocated power poles moved by SCE along Perris Boulevard (from Luxury Street to approximately 1,000 feet south of Manzanita Avenue) and manhole reconstruction and/or relocations. Verizon shall be allowed a minimum of 15 working days to perform their relocation work.

The Contractor shall be responsible to arrange for and coordinate with Time Warner for Time Warner related relocation work. Time Warner work will include relocation of its facilities to the relocated power poles moved by SCE along Perris Boulevard (from Luxury Street to approximately 1,000 feet south of Manzanita Avenue). Time Warner shall be allowed a minimum of 15 working days to perform their relocation work.

The Contractor shall be responsible to arrange for and coordinate with Eastern Municipal Water District (EMWD) by calling Aurora Fong at (951) 928-3777, extension 4437, for EMWD related relocation work. EMWD work will include relocation of water meters, backflow preventers and air release valves as shown on the plans. EMWD shall be given a minimum of two weeks advance notice and be allowed two working days per facility to be relocated.

The Contractor shall be responsible to arrange for and coordinate with the Gas Company for Gas Company related relocation work. Gas Company work will include relocation of its facilities on Perris Boulevard near Robin Lane. The Gas Company shall be allowed a minimum of 15 working days to perform their relocation work.

Pursuant to Public Contact Code Section 3400(b), the City of Moreno Valley may make a finding that designates certain materials, products, things, or services by specific brand or trade name for statutorily enumerated purposes. As required by Section 3400(b), the City of Moreno Valley has made such findings as further described in the Project Special Provisions. These findings, as well the materials, products, things, or services and their specific brand or trade names that must be used for the Project are found in the appropriate sub-sections of these special provisions. For such equipment, no equals will be allowed.

MOBILIZATION

Mobilization shall be in accordance with Subsection 9-3.4 "Mobilization," of the Standard Specifications, and these special provisions.

Mobilization shall consist of preparatory work and operations, including but not limited to, those necessary for the movement of personnel, equipment, supplies, and incidentals to the project site; for the establishment of all offices, buildings, construction yards, sanitary facilities, and any

other facilities necessary for work on the project; and for all other work and operations which must be performed or costs incurred prior to beginning work on the various contract items on the project site, as well as the related demobilization costs anticipated at the completion of the project. The cost of all bonds and insurance policies, including premiums and incidentals, shall be included in mobilization.

No additional compensation will be allowed for additional mobilizations required, including but not limited to, delays caused by the relocation of existing utility facilities shown on the plans or discovered during construction operations.

The deletion of work or the addition of extra work as provided for herein shall not affect the price paid for Mobilization.

Payment for mobilization, additional mobilizations, cost of all bonds and insurance polices, and all costs incurred prior to beginning work shall be considered to be included in and distributed proportionately through all of the contract items of work, and no additional compensation will be allowed.

NOTIFICATION OF RESIDENTS AND BUSINESSES

The Contractor shall notify in person and with printed notification (in English and Spanish language), at least ten (10) working days prior to commencing work, to all agencies, firms, institutions, postal service, residents, hospital, Riverside Transit Authority (RTA), schools, stores, utilities and waste disposal service fronting or affected by the work. Additional printed notification (in English and Spanish language) shall be given not less than five (5) working days prior to performing any work which will restrict property access, close or partially close the street, or which will restrict or disallow street parking. All schools and churches shall receive seven (7) working days notification prior to performing any work which will restrict property access.

The Contractor shall coordinate with the school district for pick-up and drop-off of school children, RTA for the pick-up and drop off of riders, waste disposal collection, the postal service to ensure delivery of mail, and churches for weekly or special activities.

The printed notices shall contain a general description of the work to be done and the date that the work is to be done. The notices shall also include a statement that parking will be restricted as called for on the "NO PARKING" signs to be posted along the street. All public notices must be reviewed and approved by the Resident Engineer prior to its distribution.

The Contractor shall also post printed "NO PARKING-TOW AWAY" signs at one-hundred-foot (100') maximum spacing along each side of the affected streets for four (4) working days prior to the commencement of the street improvement work. The Contractor shall document the day, date and time the "NO PARKING" signs were posted. Posting of signs on trees and utility poles will not be allowed.

The signs shall contain the day, date, hours and vehicle code that parking will be prohibited on that particular street, CVC 22651L and CVC 22654D. The signs shall be removed immediately upon completion of work that will prohibit parking.

The printed notices and the "NO PARKING" signs shall be furnished by the Contractor.

Full compensation for compliance with the preceding requirements shall be considered as being included in the various Contract items in the bid schedule and no additional compensation will be allowed therefore.

RED IMPORTED FIRE ANTS (RIFA)

The City of Moreno Valley has areas of infestation of red imported fire ant colonies and has quarantine areas. Movement of earth within and from the quarantine areas is restricted to inspection and possible treatment. RIFA have been found to nest under cracked pavement, sidewalks, water meter boxes, pull boxes, and traffic signal cabinets, along with other utilities within the right of way.

The Contractor shall notify the California Department of Food & Agriculture, Jose Reyes (760) 776-8208, or Riverside County Agricultural Commissioner before excavating or moving any earth or making a disturbance to the soil. The Contractor shall fill out and send a cooperative Red Imported Fire Ant Project Agreement to the California Department of Food and Agriculture, 73-710 Fred Waring Drive, Suite 220, Palm Desert, CA 92260.

Should the Contractor be delayed, and such delay could not have been reasonably foreseen or prevented by the Contractor, the Contractor shall be entitled only to an equivalent extension of time for the completion of the Contract, and shall not be entitled to damages due to downtime and idled equipment or additional payments over and above the agreed upon unit prices.

Full compensation for compliance with the preceding requirements shall be considered as being included in the various Contract items in the bid schedule and no additional compensation will be allowed therefore, except if the RIFA are found. A Contract Change Order will be issued for the eradication of the RIFA.

STREET MAINTENANCE

The Contractor shall be responsible for the maintenance of the streets and roadways to be used by public and local traffic through and adjacent to the construction zone, from the date of "Notice to Proceed" until the date of acceptance of the completed construction improvements.

Street maintenance shall include filling of potholes, grading of subgrade and base, replacing signs, and installing interim pavement striping and markers on the street and other side streets within the construction zone. Street maintenance shall also include sweeping and washing of streets, adjacent and connected to the construction zone on a weekly, or more frequent schedule, to prevent the accumulation of dust, dirt, gravel or other deleterious materials, all as necessary to maintain the construction roadways and adjacent streets in a safe, clean and drivable condition for use by public and local traffic. Work shall be done as necessary and as approved by the Engineer.

Full compensation for furnishing all labor, equipment, materials, and tools required to perform Street Maintenance of the type and to the limits noted above, and as ordered by the Engineer, shall be considered as being included in the various Contract items of work and no separate or additional compensation will be allowed therefore.

DUST CONTROL

Dust control shall be performed in accordance with Subsection 7-8.1, "Clean up and Dust Control," of the Standard Specifications, South Coast Air Quality Management District (SCAQMD) Rule 403, the general Provisions and the following Provision.

Dust resulting from the Contractor's performance of the work, either inside or outside, the right-of-way shall be controlled by the Contractor. Dust control includes the action necessary to prevent, reduce, or control dust within the work area as required to complete the work. The Contractor shall carry out proper and efficient measures to prevent his operations from producing dust in amounts damaging to property or causing a nuisance, or harm to persons living nearby or occupying buildings in the vicinity of the work. The Contractor shall control dust 24 hours a day, seven days a week. The methods to be used for controlling dust in the construction area and along haul roads shall be approved by the Engineer prior to starting any work. The Rule 403 Implementation Handbook published by the SCAQMD, contains a detailed listing of reasonably available dust control measures.

Dust or dirt accumulations generated by the Contractor's operations shall be cleaned and removed by the Contractor from all areas as designated by the Engineer. Areas to be cleaned shall include, but not be limited to swimming pools, interiors of any structures including residences and places of business, exteriors of any structures including roofs, patios, driveways, and any other areas as required. The Contractor shall retain a professional cleaning service for the cleaning of swimming pools, and the interior and exterior of structures. The cost for cleaning and removal of dust or dirt shall be at the Contractor's expense and no additional compensation will be made therefore.

Water for use in dust control shall, at the option of the Contractor, be potable or non-potable. Non-potable water shall consist of reclaimed waste water or non-potable water developed from other sources.

If the Contractor uses reclaimed waste water in the work, the sources and discharge of reclaimed waste water shall meet the California Department of Health Services Water Reclamation Criteria and the Regional Water Quality Control Board requirements. The Contractor shall obtain either a waste water discharge permit or a waiver from the Regional Water Quality Control Board. Copies of permits or waivers from the Regional Water Quality Control Board shall be delivered to the engineer before using reclaimed waste water in the work.

Water shall be applied in the amounts, at the locations, and for the purposes designated in the Special Provision and these Specifications, and as order by the Engineer.

Water for compacting embankment material, sub-base, base and surfacing material, and for laying dust, shall be applied by means of pressure-type distributors or pipe lines equipped with a spray system or hoses with nozzles that will ensure a uniform application of water.

All equipment used for the application of water shall be equipped with a positive means of shut-off.

Unless otherwise permitted by the Engineer or unless all the water is applied by means of pipe lines, at least one mobile unit with a minimum capacity of 3700 L (1,000 gallons) shall be available for applying water on the project at all times.

Chemical additives or binder may be used in water for compaction or dust palliative. If such additives are used, furnishing and applying the additives shall be at the Contractor's expense.

The right is reserved by the Engineer to prohibit the use of a particular type of additive, to designate the locations where a particular type of additive may not be used, or to limit the amount of a particular type of additive to be used at certain locations, all if the Engineer has reasonable ground for believing that such use will in any way be detrimental.

The additive or binder shall be either miscible in water or be some form of material that is directly applied to the surface without mixing with water.

Additives or binders that are miscible in water shall be either a resin emulsion, an SS1 type asphaltic emulsion, materials composed essentially of lignin sulfonate, or any other binder that is miscible in water in the proportions provided herein is non-corrosive, and is effective as a dust palliative.

Resin emulsion shall be composed of from 57 percent (57%) to 63 percent (63%) of semi-liquid petroleum resin and the remainder water to which a suitable emulsifying agent has been added. The resin emulsion shall be readily miscible with water and when diluted with any hard water in the proportions of one part of emulsion to 10 parts water shall show no signs of breakdown or separation of the petroleum resin base. Resin emulsion, which has been stored in closed containers at temperatures above freezing for a period up to 3 months, shall show no signs of separation. Any resin emulsion which has been stored for more than 3 months shall not be used until tested and approved.

SS1 type asphaltic emulsion shall conform to the provisions in Subsection 203-3, "Emulsified Asphalt."

Additives or binders that are miscible in water shall be mixed with additional water at the rate of from 4 to 19 parts of water to one part of binder, the exact rate to be determined by the Engineer. Mixing shall be accomplished by placing the binder and water in the spreading equipment simultaneously or by some other mixing method that will produce equivalent results.

The resulting mixture shall be applied with pressure type water distributor trucks equipped with a spray system or pressure type asphalt distributors at an approximate rate of from 0.9- to 3.6 L/m2 (O.2 to 0.8 gallons per square yard).

Additives or binders that are directly applied to the surface without mixing with water shall be applied with equipment approved by the Engineer. The binder shall be applied at a rate of from 0.4- to 1.1 L/m2 (0.10 to 0.25 gallons per square yard).

The exact rate and number of applications of binders will be determined by the Engineer.

Dust control ordered by the Engineer to be applied on Saturdays, Sundays or holidays will be included in the Contract price for dust control and no additional compensation will be allowed therefore.

No adjustment of compensation will be made for any increase or decrease in the quantity of dust control required, regardless of the reason for such increase or decrease.

Full compensation for all direct and indirect costs incurred for work performed or materials used to control dust resulting from the Contractor's performance of the work and caused by public traffic, either inside or outside the right of way shall be considered as included in the Contract prices paid for the various items of work involved and no additional compensation will be allowed therefore.

CLEAN UP

Throughout all phases of construction, including suspension of work and until the final acceptance, the Contractor shall keep the site clean and free from rubbish and debris.

The Contractor shall remove and dispose of all loose material and debris caused by construction operations from the construction site on a daily basis.

Materials and equipment shall be removed from the site as soon as they are no longer necessary. Before the final inspection, the site shall be cleared of all rubbish, weeds, unwanted plants/trees, excess and unused materials, falsework, temporary structures, and equipment so as to present a satisfactory clean and neat appearance. All clean up costs shall be included in the Contractor's Bid.

Care shall be taken to prevent spillage on haul routes. Any such spillage shall be removed immediately and the area cleaned.

Excess excavated material from catch basins or similar structures shall be removed from the site immediately. Sufficient material may remain for use as backfill if permitted by the Specifications or Engineer. Forms and form lumber shall be removed from the site as soon as practicable after striping.

Failure of the Contractor to comply with the Engineer's clean up orders may result in an order to suspend work until the condition is corrected. No additional compensation will be allowed as a result of such suspension.

Before final inspection of the work, the Contractor shall clean the right of way, private property, material sites, and all ground occupied by the Contractor in connection with the work of all rubbish, weeds, unwanted plants/trees, excess and unused materials, falsework, temporary structures, and equipment. All parts of the work shall be left in a neat and presentable condition.

Full compensation for collecting and disposing of loose material and debris from the job site shall be considered as included in the contract prices paid for the various items of work involved and no additional compensation will be allowed therefore.

POTHOLE

The Contractor shall pothole all underground utilities and substructures to determine the depth for clearance or conflicts for any underground improvements such as gas lines, telephone lines, electrical lines, sewer lines, water lines, storm drain lines, etc. The Contractor shall take an adequate number of potholes to determine an average depth of the underground utility and substructures. The Contractor shall provide the City with the location and elevation of the utility, and if the utility conflicts with the improvement plan. The potholing information is to be recorded on the plan and shall be submitted to the City after completion of the potholing task. All potholes shall be recompacted and paved when in a paved area.

The Contractor shall begin potholing activities as one of the initial work items prior to commencing construction.

Full compensation for furnishing all labor, equipment, materials, and tools required to perform Pothole of all underground utilities and substructures, and as ordered by the Engineer, shall be considered as being included in the various Contract items of work and no separate or additional compensation will be allowed therefore.

PROTECTION AND RESTORATION OF EXISTING IMPROVEMENTS

Protection and Restoration of Existing Improvements shall be in accordance with Subsection 7-9, "Protection and Restoration of Existing Improvements," of the Standard Specifications, and these Special Provisions.

The Contractor is encouraged to visit each private property to familiarize themselves with the scope of removals and improvements required.

The Contractor may find it necessary to remove and replace some irrigation facilities during the process of construction. In such events, the Contractor shall make a written request to the Engineer in the field for said work and shall notify and cooperate with the resident and/or owner of the property affected. Any irrigation facilities in conflict with the proposed improvements that are removed, damaged, disturbed, or broken, shall be modified, repaired, and/or replaced to provide full irrigation coverage to the areas requiring irrigation, using new materials of equal or better quality than the original materials.

The Contractor may find it necessary to remove and replace some electrical facilities during the process of construction. In such events, the Contractor shall make a written request to the Engineer in the field for said work and shall notify and cooperate with the resident and/or owner of the property affected. Any electrical facilities in conflict with the proposed improvements that are removed, damaged, disturbed, or broken, shall be modified, repaired, replaced and/or abandoned to provide full service to the areas requiring service, and/or abandoning to the source of power using new materials of equal or better quality than the original materials.

All trees, shrubbery, and lawns which are deprived of normal irrigation due to a disruption of service caused by the Contractor's operations shall be regularly and thoroughly irrigated by the Contractor so that said plantings will not be damaged. If any trees, shrubbery, lawns, or their plants die or suffer unacceptable damage as a result of or precipitated by the Contractor's

operations, the Contractor shall replace it with the same plant species and size. Existing grass lawns within the area which must be excavated and/or re-graded, shall be cut into approximately 300 mm (12 in) squares, removed, protected, cared for and replaced as soon as possible. Dead, dying, and unacceptably damaged grass shall be replaced with new grass sod.

The upper 150 m (6 in) of all backfill in areas subject to planting and/or replanting shall be topsoil, free of rocks and debris. Backfill below this depth shall consist of native soil, free of rocks, and debris, and compacted to a relative compaction of 85 percent (85%).

Damaged or injured plants shall be removed and recycled though green waste processors. At the option of the Contractor, removed trees and shrubs may be reduced to chips and removed from the project.

Replacement planting of injured or damaged trees, shrubs and other plants shall be completed not less than 20 working days prior to completion of the work. Replacement plants shall be watered as necessary to maintain the plants in a healthy condition.

Existing hardscape that is not to be removed and is damaged due to the Contractor's operations shall be restored or replaced in as nearly the original condition and location as is reasonably possible.

Full compensation for compliance with the preceding requirements shall be considered as being included in the various Contract items in the bid schedule and no additional compensation will be allowed therefore.

PROTECTION AND RESTORATION OF UNDERGROUND UTILITIES AND FACILITIES

All existing underground utilities and facilities such as electric utilities, gas utilities, telephone utilities, television utilities, water utilities, street lighting facilities, traffic signal facilities, sanitary sewers, storm drains, and irrigation systems may not have been shown on the Plans for this project. The Contractor shall assume that any of these underground utilities and/or facilities may be encountered during the removal and reconstruction work and shall protect and restore same in place in accordance with Section 5 of the Standard Specifications, Subsection 7-9 of the Standard Specifications, and the following requirements and provisions:

The Contractor shall pothole utilities in any areas of excavation, including but not limited to, street widening, utility pole installation or relocation, light pole installation or relocation, pipe installation, catch basin installation, pavement reconstruction, and traffic signal equipment foundation installation. The Contractor shall submit pothole locations to the City five (5) working days ahead of USA notification for review and comment. The Contractor retains sole responsibility for utilities. The Contractor shall pot hole a minimum of two (2) working days ahead of the construction or installation for the area in which the work is to be performed. The "pot holes" shall be to a depth sufficient to satisfy the Contractor that the proposed construction work will not damage any underground utilities and/or facilities. The Contractor shall be solely responsible for the cost of repair for any such damage to said underground utilities and/or facilities and shall, except for irrigation systems, make or cause to be made all repairs necessary to restore service the same day.

Full compensation for compliance with the preceding requirements shall be considered as being included in the various Contract items in the bid schedule and no additional compensation will be allowed therefore.

COOPERATION AND COLLATERAL WORK

Cooperation shall be in accordance with Subsection 5-6, "Cooperation," and Subsection 7-7, "Cooperation and Collateral Work," of the Standard Specifications and these Special Provisions.

The Contractor shall be responsible for ascertaining the nature and extent of any simultaneous, collateral, and essential work by others and coordinating with the work by others. The City, other contractors and utilities shall have the right to operate within or adjacent to the work site during the performance of such work.

Should construction be under way by other forces or by other contractors within or adjacent to the limits of the work specified or should work of any other nature be under way by other forces within or adjacent to those limits, the Contractor shall cooperate with all the other contractors or other forces to the end that any delay or hindrance to their work will be avoided. The right is reserved to perform other or additional work at or near the site (including material sources) at any time, by the use of other forces.

Eastern Municipal Water District (EMWD), Southern California Edison (SCE), Southern California Gas Company (Gas Co.), Time Warner Cable (TWC), and Verizon will be reconstructing and relocating a portion of their facilities, either before the construction starts or concurrently with the Contractor's work. The Contractor is to coordinate the work with these utilities and any other utility relocating their facilities at no separate or additional cost.

Each contractor shall be responsible to the other for all damage to work, to persons or property caused to the other by their operations, and for loss caused the other due to unnecessary delays or failure to finish the work within the time specified for completion.

The Contractor shall include in its bid all costs involved as a result of coordinating its work with others. The Contractor will not be entitled to additional compensation from the City for damages resulting from such simultaneous, collateral, and essential work. If necessary to avoid or minimize such damage or delay, the Contractor shall re-deploy its work force to other parts of the work.

It is anticipated that some or all of the existing utilities will be relocated during construction. The Contractor is to coordinate its work with the utility companies and with any other utility relocating their facilities, at no separate or additional cost.

Should the Contractor be delayed by the City, and such delay could not have been reasonably foreseen or prevented by the Contractor, the Engineer will determine the extent of the delay, the effect on the project, and any extension of time. Should any agency or utility company's work result in delays to the Contractor's work schedule, the Contractor shall be entitled only to an equivalent extension of time for the completion of the contract, and shall not be entitled to damages due to downtime and idled equipment or additional payments over and above the agreed upon unit prices.

Full compensation for compliance with all collateral work shall be considered, as being included in the various Contract items in the bid schedule and no additional compensation will be allowed therefore.

TREE REMOVAL AND RECYCLING

Work shall consist of removal of existing trees and roots in conformance with Section 300-1 "Clearing and Grubbing," of the Standard Specifications. The Contractor shall be responsible for recycling the trees through green waste processors that are the feed stock to biomass woody waste facility and pursuant to Subsection 300-2.6 "Surplus Material," of the Standard Specifications.

Subsection 300-1.3.1 "General", of the Standard Specifications" to read as follows:

> The Contractor shall make all arrangements for removal and recycling of the material at offsite locations and provide the City with the weight certification of recycling in tons of trees and the required monthly Solid Waste Disposal and Recycling Reports.

Trees shall be removed at the locations shown on the Plans. Removal shall consist of removing trees and their roots 1 1/2 inches in diameter and larger.

Heavy tree trimming is anticipated at 11269 Perris Boulevard. The Contractor shall work with the property owner and Engineer to establish which trees are required to be removed or trimmed to accommodate new improvements.

Holes resulting from the removal of trees shall be backfilled with soil from the surrounding area the same day the trees are removed and compacted to a minimum relative compaction of ninety percent (90%).

All removed material shall be removed from the project site the same day.

Stockpiling of materials within the right of way, City parking lots, or other City-improved property shall not be allowed unless written permission is given by the Engineer.

Full compensation for "Tree Removal and Recycling" shall be included in the lump sum (LS) contract price paid for Clearing, Grubbing, and Removals and shall include, but not limited to, furnishing all labor, materials, tools, equipment, loading, hauling, recycling, providing recycling weight certification, reports, and incidentals for doing all the work involved in tree removal as shown on the Plans, and no additional compensation will be allowed therefore. If the Contractor does not provide the weight certification of recycling and the required monthly Solid Waste Disposal and Recycling Reports, then payment will be withheld until the weight certification and reports are provided.

GREEN WASTE RECYCLING

Work shall consist of removal of green waste (grass clippings, sod, leaves, shrubs, and any other vegetation) in conformance with Section 300-1 "Clearing and Grubbing," of the Standard Specifications. The Contractor shall be responsible for recycling the green waste through a green waste processor.

Subsection 300-1.3.1 "General" of the Standard Specifications shall include as follows:

> The Contractor shall make all arrangements for removal and recycling of the material at offsite locations and provide the City with the weight certification in tons of recycling green waste and the required monthly Solid Waste Disposal and Recycling Reports.

Holes resulting from the removal shall be backfilled with soil from the surrounding area the same day and compacted to a minimum relative compaction of ninety percent (90%).

All removed material shall be removed from the project site the same day.

Stockpiling of materials within the right of way, City parking lots, or other City-improved property shall not be allowed unless written permission is given by the Engineer.

Full compensation for all costs involved in removing and recycling of green waste shall be considered as included in the contract lump sum (LS) price paid for Clearing, Grubbing, and Removals and shall include full compensation for all labor, materials, tools, equipment, loading, hauling, recycling, providing recycling weight certification, reports, and incidentals for doing all work involved in green waste recycling and no additional compensation will be allowed therefore. If the Contractor does not provide the weight certification of recycling and the required monthly Solid Waste Disposal and Recycling Reports, then that portion of the payment for Clearing, Grubbing, and Removals will be withheld until the weight certification and reports are provided.

PORTLAND CEMENT CONCRETE REMOVAL AND RECYCLING

Work shall consist of removal of Portland Concrete Cement (PCC) in conformance with Section 300-1 Clearing and Grubbing, of the Standard Specifications.

Subsection 300.1.3.1 "General" of the Standard Specifications shall include as follows:

The Contractor shall make all arrangements for removal and recycling of the material and provide the City with the weight certification of recycling in tons of PCC and the required monthly Solid Waste Disposal and Recycling Reports. The PCC shall be clean.

Full compensation for all costs involved in removing and recycling of PCC shall be considered as included in the lump sum (LS) price paid for Clearing, Grubbing, and Removals and shall include full compensation for all labor, materials, tools, equipment, loading, hauling, recycling, providing recycling weight certification, reports, and incidentals, for doing all work involved in PCC removal and recycling, and no additional compensation will be allowed therefore. If the Contractor does not provide the weight certification of recycling and the required monthly Solid Waste Disposal and Recycling Reports, then that portion of the payment for Clearing, Grubbing, and Removals will be withheld until the weight certification and reports are provided.

WEED AND PEST ABATEMENT

Weed and pest abatement shall commence after clearing and grubbing the site.

The Contractor is to apply herbicide in all areas within the project, unless specified otherwise on the Plans.

Application shall be state certified in the U.S. Environmental Protection Agency (EPA) pesticide applicator category suited for the application. Qualification of applicator, a copy of manufacturer's label, and Material Safety Data Sheet (MSDS) must be submitted to the City prior to commencement of work. The Contractor shall submit on request, samples from stocks at the job site. Should analysis, performed by the City, indicate such samples to contain less than the amount of active ingredient specified on the label, work performed with such products shall be repeated, at no additional cost to the City. The Contractor shall submit warranty application report, and documents signed by an officer of the Contractor after work has been completed. The Contractor shall deliver chemical to the project site in a sealed and labeled container in good condition as supplied by the manufacturer or formulator. Store, handle, and registration under the Federal Insecticide, Fungicide, and Rodenticide Act (FIFRA), as amended or appropriate regulations of the host county.

All pesticides (herbicides, insecticides, rodenticides, fungicides, etc) shall be applied per a written recommendation from a registered Pest Control Advisor (PCA) and in compliance with the product label.

Formulate, treat, and dispose of chemicals and their containers in accordance with label directions. Draw water for formulating only from sited designated by the City, and fit the filling hose with a backflow preventer meeting local plumbing codes or standards. The filling operation shall be under the direct and continuous observation of a Contractor's representative to prevent overflow. Secure chemicals and related materials under lock and key when unattended. Ensure that proper protective clothing and equipment are worn and used during all phases of chemical application.

At the time of application, the soil shall have a sufficient low moisture content to allow uniform distribution of the treatment solution throughout the soil. Do not make applications during or immediately following heavy rains or when conditions may cause runoff.

The Contractor shall irrigate for a minimum of fourteen (14) days, to a minimum depth of one-half (1/2) inch, all areas that will be planted to germinate weeds. Weeds outside of the proposed planted areas shall be chemically treated and removed monthly, and prior to project acceptance.

Herbicides shall be applied to damp soil surface. Pre-germination period shall be performed by applications of water to sufficiently dampen the soil for two weeks prior to the application of herbicide. Additional applications of herbicide will be required to achieve complete weed kill, prior to planting.

General weeds (grassy and broadleaf) shall be treated with Round-Up Pro® (41% Active Glyphosate) transolcative herbicide equal. Certain weeds are resistant to Glyphosate. These weeds require specialty herbicides. The Pest Control Advisor shall identify treatment of such weeds.

Nutsedge (purple and yellow) require chemical treatment with Monsanto Manage® or approved equal. A minimum of two treatments within 21 days are required. Additional chemical

treatments as required to control Nutsedge. Pulling and/or scraping off Nutsedge is not an acceptable or permitted Weed control method.

Bayer Ronstar® granular (Oxadiazon 3, 50% active ingredient) preemergegence herbicide or approved equal, shall be applied to all shrub and ground cover beds immediately after planting and at the end of the 90-day maintenance period. Consult label for application instructions. All existing weeds at time of application must be chemically sprayed with approved contact or translocative herbicide.

Insects and fungus shall be controlled by appropriate pesticides throughout the project duration. The site shall be pest free at time of acceptance.

Pesticides not listed shall be used per written recommendation of a PCA.

Notify Agency Representative two working days prior to application of chemical.

All solution mixed applications shall be applied with a paddle agitator spray rig. Blue chemical dye is required to be added to the chemical mix.

Weed control treatment shall be applied after the subgrade has been completed and just prior to placing the aggregate base course or asphalt concrete. The Pest Control Advisor shall identify treatment of area. The time lapse between soil treatment and placing of cover shall be the practicable minimum.

The Contractor shall provide all necessary protection to prevent injury to animal or adjacent plant life and property occasioned by the application of the approved herbicide. The Contractor will be held responsible for all personal injury or property damage caused by the application of soil sterilants or the storage of the same.

Prior to placement of turf grass, the area to be planted shall be chemically treated "weed free". Follow the pesticide manufacturer's recommendations regarding replanting period.

The project shall be weed free (chemically treated) at the end of the project.

Full compensation for compliance with the preceding requirements shall be considered as being included in the various Contract Items in the Bid Schedules and no additional compensation will be allowed therefore.

RODENT CONTROL

The Contractor is to apply herbicide in all areas within the project, unless specified otherwise on the plans.

Applicator shall be state certified in the U.S. Environmental Protection Agency (EPA) pesticide applicator category suited for the application. Qualification of applicator, a copy of manufacturer's label, and Material Safety Data Sheet (MSDS) must be submitted to the City prior to commencement of work. The Contractor shall submit on request, samples to contain less than the amount of active ingredient specified on the label, work performed with such products shall be repeated, at no additional cost to the City. The Contractor shall submit

warranty, applications report, and documents signed by an officer of the Contractor after work has been completed, The Contractor shall deliver chemical to the project site in a sealed and labeled container in good condition as supplied by the manufacturer or formulator. Store, handle, and use herbicides in accordance with manufacturer's labels. Labels shall bear evidence of registration under the Federal Insecticide, Fungicide, and Rodenticide Act (FIFRA), as amended or appropriate regulations of the host country.

All pesticides (herbicides, insecticides, rodenticides, fungicides, etc) shall be applied per a written recommendation from a registered Pest Control Advisor (PCA) and in compliance with the product label.

At the beginning of the project, the Contractor shall inspect the entire project site, treating all existing gopher, mice, and ground squirrel activity. Contractor shall level all mounds after treatment. Treatments will involve one (1) initial treatment, followed by two (2) inspections and/or treatments within thirty (3) days of the initial treatment of the site. Additional treatments shall be performed twice a month and immediately prior to project acceptance.

Contractor shall notify the Project Manager, in writing, in advance; on dates for all inspections Contractor shall perform all treatments in accordance with applicable State, County, and City laws and regulations. Materials used must not contaminate ground water or have any in-ground movement. Contractor shall utilize all safeguards necessary during rodent control operations to ensure safety of the public and ground-feeding animals, in accordance with current standard practices accepted by the State of California Department of Food and Agriculture. Contractor must clean up any spilled bait, and use proper disposal procedures.

Full compensation for compliance with the preceding requirements shall be considered as being included in the various Contract Items in the Bid Schedules and no additional compensation will be allowed therefore.

PROJECT IDENTIFICATION SIGN (BID ITEM NO. 1)

The Contractor shall provide and erect project identification signs at the locations noted in the Plans or as otherwise approved by the Engineer. The signs shall be furnished by the Contractor, and shall be labeled as shown in the Appendix. **The project identification signs shall be erected five (5) working days prior to the start of work.**

The project identification signs shall be 1.22 m x 2.44 m (4 ft x 8 ft) in size, with two (2) 100 mm x 100 mm x 4.88 m (4 in x 4 in x 16 ft) posts. The sign posts shall be set 1.5 m (5 ft) in good, solid ground, and the backfill shall be carefully tamped into place.

The Contractor shall revise all misspellings and any other corrections on the sign at no extra cost to the City. If the Contractor is ordered to revise the Mayor's name and council member's name(s) on the sign, after the project identification sign has been approved by the Engineer, a Contract Change Order will be issued in accordance with Subsection 3-2, "Changes Initiated by the Agency," of the Standard Specifications for the cost of changing names.

Upon completion of the project, each project identification sign shall be removed from the project limits and disposed of by the Contractor. The cost of project identification sign removal

and disposal shall be considered incidental to the other items of work and no separate or additional payment will be allowed therefore.

The contract unit price paid per each (EA) for "Project Identification Sign" shall include full compensation for furnishing all labor, equipment, materials, and tools required for performing all work necessary to paint, label, assemble, and for erecting project identification signs complete in place, and no separate or additional compensation will be allowed therefore.

PROJECT COMPLETION SIGN (BID ITEM NO. 2)

After completion of the project the Contractor shall provide and erect project completion signs at the locations where the project identification were located or as noted in the Plans or as otherwise approved by the Engineer. The signs shall be furnished by the Contractor, and shall be labeled as shown in the Appendix. The project completion signs shall be erected after all work on the project has ceased and shall be removed two weeks later.

The project completion signs shall be 4 ft x 8 ft in size, with two (2) 4 in x 4 in x 16 ft posts. The sign posts shall be set 5 ft in good, solid ground, and the backfill shall be carefully tamped into place.

The Contractor shall revise all misspellings and any other corrections on the sign at no extra cost to the City. If the Contractor is ordered to revise the Mayor's name and council member's name(s) on the sign, after the project identification sign has been approved by the Engineer, a Contract Change Order will be issued in accordance with Subsection 3-2, "Changes Initiated by the Agency," of the Standard Specifications for the cost of changing names.

Prior to the release of retention monies, each project completion sign shall be removed from the project limits and disposed of by the Contractor. The cost of project completion sign removal and disposal shall be considered incidental to the other items of work and no separate or additional payment will be allowed therefore.

The contract unit price paid per each (EA) for "Project Completion Sign" shall include full compensation for furnishing all labor, equipment, materials, and tools required for performing all work necessary to paint, label, assemble, and for erecting project identification signs complete in place, and no separate or additional compensation will be allowed therefore.

STORMWATER AND NON-STORMWATER POLLUTION CONTROL (BID ITEM NOS. 3 AND 4)

The contract item "Stormwater and Non-Stormwater Pollution Control" shall include preparing, obtaining approval of, amending, and implementing the Permit Registration Documents (PRDs) as required by the State Water Resources Control Board (SWRCB) and the California Regional Water Quality Control Board (CRWQCB) - Santa Ana Region. The contract item Non-Stormwater Discharge or Dewatering shall include compliance with the Santa Ana Regional Water Quality Board Order No. R8-2009-0003.

The Contractor shall be responsible to maintain BMPs in the areas of work involved in the relocations performed by SCE, Verizon, and Time Warner.

General Requirements – All activities performed by the Contractor for this project shall conform to the requirements of the State-wide National Pollutant Discharge Elimination System (NPDES) General Permit (Board Order No. 2009-0009-DWQ, NPDES No. CAS000002) for Stormwater Discharges Associated with Construction and Land Disturbance Activities, hereafter referred to as the "General Permit", issued by the SWRCB. This General Permit regulates both stormwater and non-stormwater discharges associated with Contractor's construction activities. This General Permit can be downloaded at http://www.swrcb.ca.gov/water_issues/programs/stormwater/constpermits.shtml.

The PRDs mentioned above consist of:

1. Risk Assessment (Section VIII of the General Permit)
2. Site Map
3. Stormwater Pollution Prevention Plan (Section XIV of General Permit)
4. Signed Certification Statement

Risk Assessment – The Contractor shall calculate the project site's sediment risk and receiving water risk during periods of soil exposure (i.e. grading and site stabilization) and use the calculated risks to determine a Risk Level(s) using the methodology in Appendix 1 of the General Permit.

Site Map – The Contractor shall provide a site map of the project area.

Stormwater Pollution Prevention Plan (SWPPP) – The Contractor shall prepare a SWPPP, which shall identify site specific Best Management Practices (BMPs) to be implemented during and after construction to minimize the potential pollution of stormwater runoff and downstream receiving waters. The identified BMPs shall be practices designed to minimize or eliminate the discharge of pollutants from the construction site and Contractor's construction activities, including, but not limited to:

1. Good housekeeping practices for solid and sanitary/septic waste management, vehicle and equipment cleaning/maintenance, and material handling and storage.

2. Construction procedures such as stabilized construction access points, scheduling/phasing to minimize areas of soil disturbance, soil stabilization, and erosion/sediment control.

The SWPPP shall also stipulate an ongoing program for monitoring and maintenance of all BMPs.

The SWPPP shall be designed to address the following objectives:

1. All pollutants and their sources, including sources of sediment associated with construction, construction site erosion and all other activities associated with construction activity are controlled;
2. Where not otherwise required to be under a Regional Water Board permit, all non-stormwater discharges are identified and either eliminated, controlled, or treated;

3. Site BMPs are effective and result in the reduction or elimination of pollutants in stormwater discharges and authorized non-stormwater discharges from construction activity to the Best Available Technology/Best Conventional Technology (BAT/BCT) standard;
4. Calculations and design details as well as BMP controls for site run-on are complete and correct; and
5. Stabilization BMPs, installed to reduce or eliminate pollutants after construction, are completed.

To demonstrate compliance with requirements of the General Permit, the Qualified SWPPP Developer (QSD) shall include information in the SWPPP that supports the conclusions, selections, use, and maintenance of BMPs.

The Contractor shall make the SWPPP available at the construction site during working hours while construction is occurring and it shall be made available upon request by a State or Regional Board inspector. When the original SWPPP is retained by a crewmember in a construction vehicle and is not currently at the construction site, current copies of the BMPs and map/drawing will be left with the field crew and the original SWPPP shall be made available via a request by radio/telephone.

Signed Certification Statement – The Contractor shall submit a signed certification certifying the SWPPP was prepared under their direction and that the SWPPP is a true, accurate, and complete representation of the proposed project and mitigation measures.

In the event the City incurs any Administrative Civil Liability or Mandatory Minimum (fine) imposed by the CRWQCB - Santa Ana Region, as a result of the Contractor's failure to fully implement the provisions of this section and permit requirements, "Stormwater and Non-Stormwater Pollution Control", the Engineer may, in the exercise of his sole judgment and discretion, withhold from payments otherwise due the Contractor a sufficient amount to cover the Civil Liability. Liability may be in an amount up to $37,500 per day per deemed occurrence.

Stormwater and Non-Stormwater Pollution Control work shall conform to the requirements in the latest version of the California Stormwater Quality Association (CASQA) Handbook, entitled **"California Stormwater BMP Handbook – Construction" updated November 2009**. A copy of the "California Stormwater BMP Handbook – Construction", updated November 2009, hereafter referred to as the "CASQA Handbook", may be obtained from CASQA, Post Office Box 2105, Menlo Park, California 94026-2105. Telephone: 650.366.1042. Copies of the handbook can also be downloaded from the CASQA Internet site at http://www.cabmphandbooks.com/construction.asp.

The Contractor shall be responsible for all costs and for any liability imposed by law as a result of the Contractor's failure to comply with the requirements set forth in this section, "Stormwater and Non-Stormwater Pollution Control", including but not limited to, compliance with the applicable provisions of the CASQA Handbook, General Permit, General De Minimus Permit, Federal, State, and local regulations. For the purpose of this paragraph, costs and liabilities include, but are not limited to, fines, penalties, and damages whether assessed against the City

or the Contractor, including those levied under the Federal Clean Water Act and the State Porter-Cologne Water Quality Act.

The Contractor shall become fully informed of and comply with the applicable provisions of the CASQA Handbook, General Permit, General De Minimus Permit, and Federal, State, and local regulations that govern the Contractor's activities and operation pertaining to both stormwater and non-stormwater discharges from both the project site and areas of disturbance outside the project limits during construction. The Contractor shall, at all times, keep copies of the General Permit, General De Minimus Permit, approved SWPPP, and all amendments at the project site. The SWPPP shall be made available upon request of a representative of the SWRCB, CRWQCB, United States Environmental Protection Agency (USEPA), or local stormwater management agency. Requests by the public shall be directed to the Engineer.

The Contractor is solely and exclusively responsible for any arrangements made between the Contractor and other property owners or entities that result in disturbance of areas or construction activities being conducted outside limits of the designated rights of way and temporary construction easements as shown on the project drawings.

The Contractor shall, at reasonable times, allow authorized agents of the CRWQCB, SWRCB, USEPA, or local stormwater management agency, upon the presentation of credentials and other documents as may be required by law, to:

1. Enter upon the construction site and the Contractor's facilities pertinent to the work;
2. Have access to and copy any records required to be kept as specified in the General Permit;
3. Inspect the construction site, including any offsite staging areas or material storage areas, and related soil stabilization practices and sediment control BMPs; and
4. Sample or monitor for the purpose of ensuring compliance with the General Permit.

The Contractor shall notify the Engineer immediately upon request from regulatory agencies to enter, inspect, sample, monitor, or otherwise access the project site or the Contractor's records.

Permit Registration Documents (PRDs) Preparation and Approval - The Contractor shall prepare and obtain approval of the PRDs as part of the Stormwater and Non-Stormwater Pollution Control work for this contract. The SWPPP shall include an appropriate Construction Site Monitoring Program (CSMP) as required by Section I, "Monitoring and Reporting Requirements" of Attachment C of the General Permit. A guidance document titled "Field Monitoring and Analysis Guidance Document" is available from the California Stormwater Quality Association internet site at http//www.casqa.org/LeftNavigation/BMPHandbooksPortal/tabid/200/Default.aspx. The Contractor shall prepare and implement the SWPPP in accordance with the CASQA Handbook and CSMP, the General Permit and these Detailed Specifications.

In case of conflict between the CASQA Handbook and these Detailed Specifications, the Detailed Specifications shall govern; in case of conflict between these Detailed Specifications and the General Permit, the latter shall govern.

Within five (5) working days after the award of the contract, the Contractor shall submit two (2) copies of the PRDs to the Engineer for review and approval. The Contractor shall allow five (5) working days for the Engineer to review the PRDs. If revisions are required as determined by the Engineer, the Contractor shall revise and resubmit the PRDs within three (3) working days of receipt of the Engineer's comments and shall allow five (5) working days for the Engineer to review the revisions. The Contractor shall submit two (2) copies of the approved PRDs to the Engineer prior to the pre-construction meeting. **The Contractor must have approved PRDs prior to the pre-construction meeting.**

Within five (5) working days after the award of the contract, the Contractor shall submit three (3) copies of the SWPPP to the Engineer for review and approval. The Contractor shall allow five (5) working days for the Engineer to review the SWPPP. If revisions are required as determined by the Engineer, the Contractor shall revise and resubmit the SWPPP within three (3) working days of receipt of the Engineer's comments and shall allow five (5) working days for the Engineer to review the revisions. The Contractor shall submit three (3) copies of the approved SWPPP to the Engineer prior to pre-construction meeting. **The Contractor must have an approved SWPPP prior to the Pre-Construction meeting.**

The SWPPP shall incorporate BMPs in each of the following categories:

1. Soil stabilization practices;
2. Sediment control practices;
3. Sediment tracking control practices;
4. Wind erosion control practices; and
5. Non-stormwater management, and waste management and disposal control practices.

Specific objectives and minimum requirements for each category of BMPs are described in the CASQA Handbook. The Contractor shall consider the objectives and minimum requirements presented in the CASQA Handbook for each of the above categories. When minimum requirements are listed for any category, the Contractor shall incorporate one or more of the listed minimum BMPs required into the SWPPP and implement them on the project to meet the pollution control objectives for the category. In addition, the Contractor shall consider other BMPs presented in the CASQA Handbook to supplement the minimum BMPs required when necessary to meet the objectives of the SWPPP and maintain compliance with the General Permit. The Contractor shall document the selection process in accordance with the procedure specified in the CASQA Handbook.

The Contractor should not assume that the minimum BMPs required for each category presented in the CASQA Handbook are adequate to meet the pollution control objectives. The Contractor may use other effective BMPs, as approved by the Engineer, in addition to the minimum as required in the CASQA Handbook to achieve the pollution control objectives.

The SWPPP shall include the following items as described in the CASQA Handbook, CSMP, and General Permit:

Section 1 - SWPPP Requirements:

1.1 Introduction
1.2 Permit Registration Documents
1.3 SWPPP Availability and Implementation
1.4 SWPPP Amendments
1.5 Retention of Records
1.6 Required Non-Compliance Reporting
1.7 Annual Report
1.8 Changes to Permit Coverage
1.9 Notice of Termination

Section 2 - Project Information:

2.1 Project and Site Description
2.2 Stormwater Run-On From Offsite Areas
2.3 Findings of the Construction Site Sediment and Receiving Water Risk Determination
2.4 Construction Schedule
2.5 Potential Construction Site Pollutant Sources
2.6 Identification of Non-Stormwater Discharges

Section 3 - Best Management Practices:

3.1 Schedule for BMP Implementation
3.2 Erosion Control and Sediment Control
3.3 Non-Stormwater and Material Management
3.4 Post-Construction Stormwater Management Measures

Section 4 - BMP Inspection, Maintenance, and Rain Event Action Plans:

4.1 BMP Inspection and Maintenance
4.2 Rain Event Action Plans

Section 5 – Training

Section 6 - Responsible Parties and Operators:

6.1 Responsible Parties
6.2 Contractor List

Section 7 - Construction Site Monitoring Program:

7.1 Purpose
7.2 Applicability of Permit Requirements
7.3 Monitoring Locations
7.4 Safety
7.5 Visual Monitoring (Inspections)

7.6 Water Quality Sampling and Analysis
7.7 Watershed Monitoring Option
7.8 Quality Assurance and Quality Control
7.9 Reporting Requirements and Records Retention

To ensure that the preparation, implementation, and oversight of the SWPPP is sufficient for effective pollution prevention, individuals responsible for creating, revising, overseeing, and implementing the SWPPP should participate in applicable training programs and document such training in the SWPPP. A copy of the SWPPP should be located at the construction site.

Permit Registration Document (PRD) and Rain Event Action Plan (REAP) Amendments - If the scope or schedule of the project changes, the Contractor shall immediately notify the Engineer. The Engineer will determine if the Contractor will be required to recalculate the Risk Assessment. If it is determined by the Engineer that a new Risk Assessment is required, the Engineer will notify the Contractor to resubmit amended PRDs and in the case that the risk level increases, the Contractor shall comply with additional applicable requirements of the General Permit, including preparation and implementation of REAPs, Construction Site Monitoring Program (CSMP), Numeric Action Level (NAL) Exceedance Reports, and annual reporting requirements. The Contractor shall also prepare amendments to the PRDs, both graphically and in narrative form, whenever there is a change in the Contractor's construction activities or operations which may result in the discharge of pollutants to surface waters, groundwaters, municipal storm drain systems, or as deemed necessary by the Engineer. The Contractor shall also amend the PRDs if they are in violation of any condition of the General Permit, or has not effectively achieved the objective of reducing pollutants in stormwater discharges. Amendments shall show additional BMPs, revised Contractor's construction activities or operations, including those in areas not shown in the initially approved SWPPP, which are required on the project to effectively control water pollution.

Amendments to the PRDs shall be submitted for review and approval by the Engineer in the same manner specified for the initial approval of the PRDs. The Contractor shall date and attach all approved amendments to any of the PRDs. Upon approval of the amendment, the Contractor shall implement the approved changes, revised construction activities, or operations.

Non-Compliance Reporting - If the project is in non-compliance at any time, the Contractor shall make a written report to the Engineer within two (2) calendar days of identification of non-compliance activities.

SWPPP Implementation - Upon approval of the SWPPP, the Contractor shall be responsible throughout the duration of the project for placing, installing, constructing, inspecting, and maintaining the BMPs as well as conducting the Construction Site Monitoring Program as included in the SWPPP and any amendments thereto, and for removing and disposing of temporary BMPs. Unless otherwise directed by the Engineer or specified in these Detailed Specifications, the Contractor's responsibility for SWPPP implementation shall continue throughout any temporary suspension. Requirements for installation, construction, inspection, maintenance, removal, and disposal of BMPs are specified in the Caltrans Handbooks and these Detailed Specifications.

The Engineer may order the suspension of construction operations if the Contractor fails to comply with the requirements of this section, "Stormwater and Non-Stormwater Pollution Control", as determined by the Engineer.

The Contractor will not be compensated for sampling and analysis work because of the Contractor's failure to properly implement, inspect, maintain, and repair BMPs in the approved SWPPP and any amendments thereto, or for failing to store construction materials or wastes in watertight containers.

(a) Stormwater Pollution Control - **The Contractor shall implement soil stabilization practices and sediment control BMPs, including minimum requirements as presented in the Caltrans Handbooks, on all disturbed areas of the project site during the rainy season, defined as between October 1st and May 31st.**

Implementation of soil stabilization practices and sediment control BMPs for soil-disturbed areas, including but not limited to, grading area, slopes, roadways, gutters, and operational inlets of the project site shall be completed no later than ten (10) calendar days prior to the start of the rainy season or upon start of applicable Contractor's construction activities for projects which begin either during or within ten (10) calendar days of the rainy season.

The Engineer may require the Contractor, on a case-by-case basis, to reduce the active, soil-disturbed area limit of the project. The Contractor shall demonstrate the ability and preparedness to fully deploy soil stabilization practices and sediment control BMPs to protect soil-disturbed areas of the project site by maintaining an adequate quantity of soil stabilization and sediment control materials onsite to protect exposed, soil-disturbed areas and a detailed plan for the mobilization of sufficient labor and equipment to fully deploy the required BMPs prior to the onset of precipitation and for the duration of the project.

Throughout the rainy season, soil-disturbed areas of the project site shall be considered to be nonactive whenever soil disturbing activities are expected to be discontinued for a period of fifteen (15) calendar days or more. Areas that will become nonactive either during the rainy season or within ten (10) calendar days thereof shall be fully protected with soil stabilization practices such as covering with mulch, temporary seeding, fiber rolls, blankets, etc., within ten (10) calendar days of the discontinuance of soil disturbing activities or prior to the onset of precipitation, whichever is first to occur. Areas that will become nonactive either during the rainy season or within ten (10) calendar days thereof shall be fully protected with sediment control BMPs within ten (10) calendar days of the discontinuance of soil disturbing activities or prior to the onset of precipitation, whichever is first to occur.

Throughout the rainy season, active soil-disturbed areas of the project site shall be fully protected at the end of each day with soil stabilization practices and sediment control BMPs. The Contractor shall monitor the weather forecast on a daily basis. The National Weather Service forecast shall be used, or an alternative weather forecast proposed by the Contractor may be used if approved

by the Engineer. If precipitation is predicted prior to the end of the following workday, construction scheduling shall be modified, as required, and the Contractor shall deploy functioning BMPs prior to the onset of the precipitation.

(b) Non-Stormwater Pollution Control - **The Contractor shall implement, year-round and throughout the duration of the project, BMPs included in the SWPPP for sediment tracking, wind erosion, non-stormwater management, and waste management and disposal.**

(c) Inspections and Reporting - The Contractor shall regularly inspect the construction site for BMPs identified in the SWPPP to ensure the proper implementation and functioning of BMPs. The Contractor shall identify corrective actions and time frames to address any damaged BMPs or reinitiate any BMPs that have been discontinued.

At a minimum, the Contractor shall inspect the construction site as follows:

1. Prior to a forecast storm;
2. After any precipitation which causes runoff capable of carrying sediment from the construction site;
3. At 24 hour intervals during extended precipitation events; and
4. At a regular interval of once every 2 weeks.

The construction site inspection checklist provided in the CASQA Handbooks shall be used to ensure that the necessary BMPs are being properly implemented and are functioning adequately. The Contractor shall submit one copy of each site inspection record to the Engineer.

(d) Maintenance - The Contractor shall maintain construction site BMPs identified in the SWPPP to ensure the proper implementation and functioning of BMPs. If the Contractor or the Engineer identifies a deficiency in the deployment or functioning of an identified BMP, the deficiency shall be corrected by the Contractor within 24 hours of notification in writing, but not later than the onset of subsequent precipitation events. The correction of deficiencies shall be at no additional cost to the City.

(e) Training – The Contractor shall ensure that all persons responsible for implementing requirements of the General Permit shall be appropriately trained in accordance with Section VII "Training Qualifications and Certification Requirements" of the General Permit. Training should be both formal and informal, occur on an ongoing basis, and should include training offered by recognized governmental agencies or professional organizations.

The Contractor shall ensure that SWPPPs are written, amended, and certified by a Qualified SWPPP Developer (QSD). The Contractor shall also ensure that all inspection, maintenance, repair, and sampling activities shall be performed or supervised by a Qualified SWPPP Practitioner (QSP). A QSP is a person responsible for non-stormwater and stormwater visual observations, sampling, and analysis.

Rain Event Action Plan (REAP) – **The REAP is applicable to Risk Level 2 & 3 construction sites only.** The Contractor shall ensure a QSP develop a REAP and submit a copy to the Engineer for review 48 hours prior to any likely precipitation event. The Contractor shall amend and implement the REAP as directed by the Engineer. If no comments are received prior to the precipitation event, the REAP shall be implemented as proposed. A likely precipitation event is any weather pattern that is forecast to have a 50% or greater probability of producing precipitation in the project area. The discharger shall ensure a QSP obtain a printed copy of precipitation forecast information from the National Weather Service Forecast Office (e.g., enter the zip code of the project's location at http://www.srh.noaa.gov/forecast).

The Contractor shall ensure a QSP ensure that the REAP include, at a minimum, the following site information:

a. Site Address

b. Calculated Risk Level

c. Site Storm Water Manager Information including the name, company, and 24-hour emergency telephone number

d. Erosion and Sediment Control Provider information including the name, company, and 24-hour emergency telephone number

e. Storm Water Sampling Agent information including the name, company, and 24-hour emergency telephone number

Water Quality Monitoring, Sampling, and Analysis – **The Water Quality Monitoring, Sampling, and Analysis is applicable to all Risk Level construction sites.** The Contractor shall be responsible for preparing a Construction Site Monitoring Program (CSMP) and implementing the monitoring, sampling, and analysis requirements as described in Attachments C, D, & E of the General Permit. Records of all visual observations and sampling results required by the General Permit shall be maintained in the SWPPP and submitted to the Engineer within 24 hours of the visual observation or sampling event.

Numeric Action Level (NAL) Exceedance Report - **The NAL Exceedance Report is applicable to Risk Level 2 & 3 construction sites only.** The Contractor shall be responsible for submitting a NAL Exceedance Report to the Engineer in the event that any effluent sample exceeds an applicable NAL.

a. The Contractor shall submit all storm event sampling results for each discharge point to the Engineer no later than 24 hours after the conclusion of the storm event.

b. The Contractor shall certify each NAL Exceedance Report in accordance with the Special Provisions for Construction Activity.

c. The Contractor shall retain an electronic or paper copy of each NAL Exceedance Report for a minimum of three years after the date the annual report is filed.

d. The Contractor shall include in the NAL Exceedance Report:

i. The analytical method(s), method reporting unit(s) and method detection limit(s) of each analytical parameter (analytical results that are less than the method detection limit shall be reported as "less than the method detection limit").

ii. The date, place, time of sampling, visual observation (inspections), and/or measurements, including precipitation.

iii. A description of the current BMPs associated with the effluent sample that exceeded the NAL and the proposed corrective actions taken.

Non-Stormwater Discharge or Dewatering - **Dewatering activity should only be considered after other methods have been determined to be inadequate for storm drain construction by the Engineer.** If groundwater will be encountered during the project activities, the dewatering activity must be covered by the General Waste Discharge Requirements for Discharges to Surface Waters that Pose an Insignificant Threat to Water Quality (De Minimus Permit), Santa Ana Regional Water Quality Control Board Order No. R8-2009-0003. The Contractor shall comply with this Order, and notify and obtain approval from the Engineer fifteen (15) days prior to any non-stormwater discharging of groundwater dewatering. If an emergency or unforeseen dewatering activity that will discharge to Waters of the United States occurs, the Contractor shall contact the Engineer immediately.

When discharging groundwater from dewatering activities to surface waters, the Contractor shall comply with and implement the Monitoring and Reporting Program required under Order No. R8-2009-0003. This Order can be downloaded at http://www.waterboards.ca.gov/santaana/board_decisions/adopted_orders/orders/2009_orders.shtml. Under the Monitoring and Reporting Program, the Contractor shall prepare the monitoring report. The Contractor must submit the Monitoring Reports to the Engineer by the 15th day of each month following the monitoring period. The City will submit the Monitoring Reports to the Santa Ana Regional Water Quality Control Board. The Monitoring Reports shall cover the previous month's monitoring activities.

If there is any other form of non-stormwater discharge from the project to surface waters, the Contractor shall immediately contact the Engineer to determine appropriate actions required for coverage under the De Minimus Permit.

Failure of the Contractor to fully comply with this requirement may result in the suspension of construction operations and liability for any associated monitoring, fines, penalties, and remediation activities related to the discharge.

Reports –

(a) Annual Report - The Contractor shall be responsible for preparing an Annual Report for projects that are enrolled under 2009-0009-DWQ, for more than one continuous three month period, to meet the requirements of Section XVI of the General Permit covering the preceding period of construction from July 1st to

June 30th. The Contractor shall submit two (2) copies of the Annual Report to the Engineer by July 15th of each year for review and approval. The Contractor shall allow ten (10) working days for the Engineer to review the Annual Report. If revisions are required as determined by the Engineer, the Contractor shall revise and resubmit the Annual Report within three (3) working days of receipt of the Engineer's comments. The Contractor shall submit four (4) copies of the approved Annual Report to the Engineer prior to August 15th of each year. **The Contractor shall be responsible for providing an Annual Report to the Engineer for any construction occurring for part of the year after July 1st prior to receiving final payment on the project.**

(b) Monthly Report – The Contractor shall prepare and submit to the Engineer a Monthly Report within five (5) working days of the end of the month including:

1. All visual observation reports;
2. All sampling and analysis reports;
3. All NAL Exceedance Reports;
4. Summary of changes to the SWPPP and/or REAP based on inspection results for the preceding month.

Payment - The contract unit price paid per lump sum (LS) for "Stormwater and Non-Stormwater Pollution Control" shall include full compensation for furnishing all labor, materials, tools, equipment, and incidentals for doing all the work involved in developing, preparing, obtaining approval of, revising, and amending the PRDs, and installing, constructing, maintaining, removing, and disposing of BMPs as shown in the SWPPP, as specified in the CASQA Handbooks and Sample Contractor's Water Quality CSMP, General Permit, and these Detailed Specifications, and as directed by the Engineer. **The lump sum (LS) payment covers the entire project limits; therefore, all Alternate Bids (Alternate Bids 1 to 6) are included in the Base Bid item.**

The contract lump sum price (LS) paid for Non-Stormwater Discharge or Dewatering shall include full compensation for compliance of Section 29.10 "Non-Stormwater Discharge or Dewatering". The Contractor shall not be paid any portion of the contract lump sum (LS) if discharge of groundwater from dewatering activities to surface waters is avoided. **The lump sum (LS) payment covers the entire project limts; therefore, all Alternate Bids (Alternate Bids 1 to 6) are included in the Base Bid item. The Contractor shall not be paid any portion of the contract lump sum (LS) if discharge of groundwater from dewatering activities to surface waters is avoided.**

Any BMP required to protect storm water quality shall be installed within 24 hours of the time the Contractor is notified by the Engineer or regulatory agencies, or prior to the next rain event, whichever comes first, to install such BMP's. Each 24 hour period elapsed without installation of the required BMPs by the Contractor will be considered an Incident. Failure of the Contractor to meet the 24 hour period for installing the required BMPs will result in a permanent payment deduction of $500 for each Incident that the Contractor fails to comply, in addition to any other applicable penalties. It is the Contractor's responsibility to install any and all required BMPs.

Monthly payment will be made on a basis of the percentage of work completed on the entire project and subject to the submittal of a complete Monthly Report as specified in Section

29.11(b). Failure to complete or report required visual inspections, monitoring, sampling, and analysis requirements, NAL Exceedance Reports, and/or other necessary follow-up actions to ensure that the project stays in compliance with the General Permit can be the basis for reducing monthly progress payments for the project. Monthly progress payments will be reduced by the amount of direct costs, overhead costs, and engineering costs incurred by the Engineer to address compliance deficiencies, including costs to conduct inspections, monitoring, reporting, and supplemental BMP implementation necessary to comply with the General Permit and costs incurred by the Engineer to address complaints, additional State inspections and violations and/or fines issued by the State or US EPA associated with failure to properly comply with the General Permit. Progress Payment reductions can exceed the monthly percentage or total contract lump sum price for Stormwater and Non-Stormwater Pollution Control work.

ENVIRONMENTAL MITIGATION PER SPECIAL PROVISIONS (BID ITEM NO. 5)

In conformance with the CEQA Guidelines, the City prepared an initial study and completed a Mitigated Negative Declaration (MND) for the proposed Perris Boulevard Street Improvement Project. A Mitigation Monitoring and Reporting Plan (MMRP) have been adopted in order to mitigate or avoid significant impacts on the environment. The MMRP is included in Appendix L and are part of these Contact Documents. The Contractor is to adhere to all permits requirements pertaining to construction activities. These requirements are briefly summarized as follows:

1. AIR QUALITY

   a. The Contractor shall select the construction equipment used on-site based on low emission factors and high energy efficiency. The Contractor shall ensure that all construction equipment be tuned and maintained in accordance with the manufacturer's specifications.
   b. The Contractor shall use electric or diesel-powered equipment in lieu of gasoline-powered engines where feasible.
   c. The Contractor shall ensure that grading equipment is shut off while not in use.
   d. The Contractor shall time the construction activities so as not to interfere with peak hour traffic and so as to minimize obstruction of through traffic lanes adjacent to the site; if necessary, a flagperson shall be retained to maintain safety adjacent to existing roadways.
   e. The construction contractor shall support and encourage ridesharing and transit incentives for the construction crew.

Payment for mitigation of air quality shall be made at the contract unit price paid per lump sum (LS) for "Environmental Mitigation per Special Provisions" and shall include full compensation for furnishing all labor, materials, tools, equipment, and incidentals for doing all work involved to meet specified requirements identified above and no additional compensation will be allowed therefor.

2. BIOLOGICAL RESOURCES

The Contractor shall employ a qualified biologist.

A. The biologist shall conduct pre-construction burrowing owl surveys no more than 30 days prior to ground breaking. If burrowing owls are determined to be occupying the project site during the pre-construction surveys, a program of passive or active relocation of the owls from the project site as approved by the Western Riverside County MSHCP. The relocation shall be conducted following accepted protocols and shall occur outside the breeding season for the burrowing owl.

The Contractor shall prepare and submit a request for a change order including the appropriate specifications, if burrowing owl relocations are required. The City will negotiate a separate change order for the required relocations of burrowing owls in accordance with Section 3, Changes in Work of the Standard Specifications and these specifications.

If vegetation removal must occur during nesting season, a qualified biologist shall conduct a focused burrow survey to ensure that vegetation removal would not impact any active nests. Surveys must be conducted no more than three days prior to vegetation removal. If active nests are identified during the focused burrow surveys, removal of nesting vegetation shall be avoided until the nesting event has completed and the juveniles can survive independently from the nest. The biologist shall flag the nesting vegetation and would establish an adequate buffer (e.g. construction fencing) around the nesting vegetation. Clearing and grading shall not occur within the buffer until the nesting event has completed.

The Contractor shall prepare and submit a request for a change order including the appropriate specifications, if nesting birds are found and buffer required. The City will negotiate a separate change order for the creating adequate buffers around nesting vegetation in accordance with Section 3, Changes in Work of the Standard Specifications and these specifications.

Should the Contractor be delayed, and such delay could not have been reasonably foreseen or prevented by the Contractor, the Contractor shall be entitled only to an equivalent extension of time for the completion of the Contract, and shall not be entitled to damages due to downtime and idled equipment or additional payments over and above the agreed upon unit prices.

Payment for mitigation of biological resources shall be made at the contract unit price paid per lump sum (LS) for "Environmental Mitigation per Special Provisions" and shall include full compensation for furnishing all labor, materials, tools, equipment, and incidentals for doing all work involved to meet specified requirements identified above including paying the qualified biologist and no additional compensation will be allowed therefore.

3. CULTURAL RESOURCES

Should cultural deposits be encountered, it shall be the responsibility of the Contractor to suspend ground disturbing work in the area and employ a Qualified Archaeologist to evaluate the nature and significance of the find. If the deposit proves to be of cultural significance, a Qualified Archaeologist shall prepare a treatment plan for submission to the State Historic

Preservation Officer of approval. If human remains should be found, all work shall be stopped, and the Coroner notified. If the coroner determines the remains to be of Native American origin, he or she will notify the Native American Heritage Commission (NAHC). The NAHC will then identify the most likely descendants to be consulted regarding treatment and/or repatriation of the remains. Work will be allowed to resume only after the approval of the Coroner.

The Contractor shall prepare and submit a request for a change order including the appropriate specifications, if a treatment plan is required for the archaeological findings. The City will negotiate a separate change order for the required treatment of the archaeological find in accordance with Section 3, Changes in Work of the Standard Specifications and these specifications.

Additionally, should paleontological resources be encountered, it shall be the responsibility of the Contractor to suspend ground disturbing work in the area and employ a qualified paleontologist to evaluate the nature and the significance of the find. The paleontologist will determine the sensitive and appropriate protection measures.

The Contractor shall prepare and submit a request for a change order including the appropriate specifications, if paleontological resources are impacted. The City will negotiate a separate change order for the qualified mitigation to paleontological impacts in accordance with Section 3, Changes in Work of the Standard Specifications and these specifications.

Should the Contractor be delayed, and such delay could not have been reasonably foreseen or prevented by the Contractor, the Contractor shall be entitled only to an equivalent extension of time for the completion of the Contract, and shall not be entitled to damages due to downtime and idled equipment of additional payments over and above the agreed upon unit prices.

Payment for mitigation of cultural resources shall be made at the contract unit price paid per lump sum (LS) for "Environmental Mitigation per Special Provisions" and shall include full compensation for furnishing all labor, materials, tools, equipment, and incidentals for doing all work involved to meet specified requirements identified above including paying the qualified archaeologist and no additional compensation will be allowed therefore.

<u>All notifications and communications to resource/permitting environmental agencies shall be channeled through the Engineer.</u>

TRAFFIC CONTROL (BID ITEM NOS. 6, 84, 94, 107, 116, AND 119)

Traffic controls, including but not limited to, vehicular and pedestrian traffic controls, maintenance of vehicular and pedestrian access, detours, and street closures shall be in accordance with these technical Special Provisions; Traffic Control Plans; California MUTCD (FHWA's MUTCD 2006 edition as amended for use in California), Part 6, Temporary Traffic Control, Caltrans adopted September 26, 2006; the current "Work Area Traffic Control Handbook"; and Subsection 7-10, of the current "Standard Specifications for Public Works Construction," including all its subsequent amendments. Nothing in the Special Provisions shall be construed as relieving the Contractor from his or her responsibility to provide for the safety and convenience of traffic and the public during construction.

In the event of conflict, the order of precedence shall be as follows:

1. Special Provisions
2. Traffic Control Plans
3. California Manual on Uniform Traffic Control Devices (FHWA's MUTCD 2006 edition as amended for use in California), Part 6, Temporary Traffic Control, Caltrans, adopted September 26, 2006.
4. Work Area Traffic Control Handbook (WATCH)
5. Standard Specifications

Traffic Control shall be in accordance with the following Special Provisions:

a. All streets shall remain open to through traffic at all times except when street closure is approved by the Engineer. The Contractor shall make provisions to allow local traffic access to the closed streets. The local traffic consists of, but is not limited to, residences, church congregations, shopping centers, farmers, post offices, meter readers, trash pickup, schools, school buses, and emergency vehicles. The Contractor shall provide a smooth travel way and either a flagger and/or signing to direct traffic.

b. The Contractor shall be responsible for the preparation of Traffic Control Plans as necessary for the work. The Traffic Control Plans shall be signed and stamped by a California Registered Traffic Engineer and transmitted to the City for approval no later than fourteen (14) calendar days prior to the schedule commencement of work. Comments and corrections shall be returned to the Contractor within five (5) working days. The Traffic Control Plans shall conform to the requirements listed in these Technical Provisions; California MUTCD Part 6, Temporary Traffic Control; the Work Area Traffic Control Handbook; and the Standard Specifications.

c. All traffic controls and safety devices, equipment and materials, including but not limited to cones, channelizers, delineators, flashing warning lights, barricades, high level warning devices (telescoping flag trees), flags, signs, markers, portable barriers, temporary K-railing (Type-K), temporary fencing, flashing arrow signs, changeable message sign, markings, and flagging equipment shall be provided and maintained in "like new" condition.

d. Consistent with the City's Encroachment Permit, traffic signal actuation shall be maintained at all times. In-pavement loop detectors damaged by construction shall be repaired within 72 hours, or a suitable temporary replacement system shall be provided. Approved alternatives include wireless or video detection systems. Installation shall be accomplished by the Contractor, subject to the approval of the Engineer prior to the start of construction. After completion of the roadway construction and final paving in place, the inductive loops shall be restored and operable prior to the removal of the temporary detection system.

e. The Contractor shall furnish and properly install, construct, erect, use and continuously inspect and maintain, twenty-four (24) hours per day, seven (7) days per week, which includes holidays, all said devices, equipment and materials and all temporary and permanent pedestrian and driving surfaces as necessary to provide for the safety and

convenience of, and to properly warn, guide, control, regulate, channelize and protect the vehicular traffic, pedestrian traffic, project workers, and the public throughout the entire limits of the work activity and beyond said limits as necessary to include areas affecting or affected by the work, from the date of Notice to Proceed to the completion and acceptance of the work.

f. High-level warning devices (telescoping flag trees) are required at all times for work being performed within the roadway unless otherwise specifically approved by the Engineer.

g. All barricades shall be equipped with flashing warning lights, and all traffic cones shall be no less than 711mm (28") in height, except that shorter cones, 305 mm (12") minimum height, may be permitted during striping maintenance operations where the only function of the cone is to protect the wet paint from the traffic. The entire area of orange and white stripes for barricades shall be Type I, engineering grade, or Type II, super engineering grade, retro-reflective sheeting conforming to the requirements of ASTM Designation: D 4956-95.

h. Type III barricades, no less than 1.83 m (6') in length and equipped with two (2) Type "N" markers each and two (2) portable flashing beacons each, shall be used to close streets, except as otherwise specifically approved by the Engineer for minor maintenance work of no more than one (1) working day's duration, on weekdays, or on holidays only, and limited to the hours between 8:30 a.m. and 3:30 p.m. Said barricades shall be placed across the full roadway at each point of closure with the distance between barricades, or between barricades and curbs, not exceeding 914 mm (3') except that one (1) 3.3 m (11') wide gap between barricades shall be provided at the center of the street. Barricades to the right of the street's center, facing the inbound vehicular traffic, shall also be equipped with one (1) R11-2, "Road Closed" sign, one (1) R11-4, "Road Closed to Thru Traffic," sign, and a Type P warning sign.

i. Channelizers shall be surface mounted type and shall be furnished, placed and maintained at the locations shown on the Plans or as approved by the Engineer, and shall conform to the provisions in Subsection 12-3.07, "Channelizers," of the State of California Standard Specifications and these Special Provisions.

When no longer required for the work as determined by the Engineer, channelizers (except channelizers to be left in place), and underlying adhesive used to cement the channelizer bases to the pavement, shall be removed. Removed channelizers and adhesive shall become the property of the Contractor and shall be removed from the site of work.

j. Reflectorized (both sides) temporary self-adhesive markers, 100 mm (4 in) wide, shall be applied to unstriped pavement surface before opening the travel way to public traffic. Reflectorized temporary yellow markers shall be used for to delineate the centerline to separate opposing traffic. Reflectorized temporary white markers shall be used to delineate lanes of travel and placed in 600mm (24in) intervals transverse to the road to delineate stop bars and limit lines.

The reflectorized temporary markers shall be removed the same day the first coat of striping has been placed on the pavement. The removal of the markers shall be done such a way that the pavement is not damaged.

k. Except as otherwise approved by the Engineer, two-way vehicular traffic shall be maintained at all times within two (2) 3.3 m (11') wide lanes on streets having an effective roadway width of 13.4 m (44') or more with restricted parking. Other streets of lesser widths may be reduced to one (1) 3.6 m (12') wide lane with work activity being limited to one side at a time, and the one-way vehicular traffic being maintained at all times by properly trained and experienced flaggers. All lane closures shall have flashing arrow signs to provide additional, high level, advanced warning.

No reduction of the travelled way width shall be permitted on any City street during work days before 8:30 a.m. or after 3:30 p.m. No reduction of the travelled way width shall be permitted on weekends, holidays, or when active work is not being done, unless otherwise approved by the Engineer or as specified in "Traffic Control" of these Special Provisions. On Perris Boulevard, approximately 1,000 feet north of and south of Kalmia Avenue (adjacent to North Ridge Elementary School), no reduction in the travelled way shall be permitted after 2:20 p.m., or within the first hour after school ends, whichever is more stringent.

l. Properly trained and experienced flaggers shall be provided to direct traffic when said traffic is to be interrupted, when two-way traffic is to be reduced to one-way traffic, and at other such times as is necessary to safely pass traffic through or around the work area and when so directed by the Engineer.

m. Vehicular access to occupied residential property may be restricted on weekdays, other than holidays, between the hours of 8:30 a.m. and 3:30 p.m. while essential work activity is taking place only upon approval by the Engineer and providing the Contractor gives the property owner or resident at least forty-eight (48) hour advance written and oral notice.

Convenient and safe pedestrian access to schools, churches, occupied residential and business property shall be maintained at all times. Access to mailboxes shall be maintained at all times such that the postal delivery service is not interrupted. Trash pick-up services shall not be interrupted. Access to vacant and unused property may be restricted when approved by the Engineer. Both vehicular and pedestrian access shall be maintained at all times to all other property except as otherwise specifically authorized in writing by the Engineer.

n. Vehicular access to business, school, and church driveways shall be maintained at all times during construction.

o. Traffic control and safety devices and equipment being used that becomes damaged, destroyed, faded, graffitied, encrusted, soiled, misplaced, worn out, inoperative, lost, or stolen shall be promptly repaired, refurbished, or replaced. Traffic control and safety devices and equipment being used, that are displaced or not in an upright position from any cause, shall be promptly returned or restored to their proper position.

p. An unobstructed view of all signs and warning devices including, but not limited to, stop signs, stop ahead signs, street name signs, and other regulatory, warning and construction signs, markers, and warning devices shall be maintained at all times. All speed limit signs shall be black on white with signs at either end of the project notifying the motoring public that fines are doubled in construction zones. No trucks or other equipment or materials shall be stopped, parked, or otherwise placed so as to obscure said signs, markers and devices from the view of the vehicular and pedestrian traffic to which it applies.

q. When entering or leaving roadways carrying public traffic, the Contractor's equipment, whether empty or loaded, shall yield to said public traffic at all times, except where the traffic is being controlled by police officers, fire officers, properly trained and experienced flaggers, or at traffic signalized intersections.

r. Stockpiling or storage of materials on any public right-of-way or parking area will not be allowed without the specific written permission of the Engineer. Materials spilled along or on said right-of-way or parking area shall be removed completely and promptly. All stockpile and storage areas shall be maintained in a safe, neat, clean, and orderly condition, and shall be restored to equal or better than original condition upon completion of the work.

s. On projects involving work on, closure of, or partial closure of existing streets, and where vehicular access to the abutting property must be restricted, the work shall be so selected, arranged and scheduled that the person(s) requiring access to said abutting property and residents along said streets affected will be able to park within a reasonable distance of not more than 150 m (500') from their homes or destination. In addition, no two adjoining streets shall be closed at the same time, except as otherwise approved by the Engineer. Residents must be given written notice of such restrictions a minimum of 48 hours in advance.

t. When work has been completed on a particular street or has been suspended or rescheduled, and said street is to be opened to vehicular traffic, all equipment, "NO PARKING" signs, other obstructions, and unnecessary traffic control devices and equipment shall be promptly removed from that street, except as otherwise approved by the Engineer.

u. Should the Contractor be neglectful, negligent, or refuse, fail, or otherwise be unavailable to promptly, satisfactorily, and fully comply with the provisions specified and referred to herein above, the City reserves the right to correct or mitigate any situation, that in the sole opinion of the Engineer, constitutes a serious deficiency or serious case of noncompliance, by any means at its disposal at the Contractor's or permittee's expense, and shall deduct the cost therefor from the Contractor's progress or final payments. Such corrective action taken by the City shall not reduce or abrogate the Contractor's legal obligations and liability for proper traffic control and safety measures and shall not serve to transfer said obligations and liabilities from the Contractor to the City or the City's agents.

v. Violations of any of the above Provisions or provisions of the referenced publications,

unless promptly and completely corrected to the satisfaction of the Engineer, shall, at the sole discretion of the City, be grounds for termination of the Contract, or shut down or partial shutdown of the work, without compensation to the Contractor or permittee, or liability to the City, all as prescribed by contractual obligation or State law, whichever is applicable.

The contract unit price paid per lump sum (LS) for "Traffic Control" shall include full compensation for, but not limited to, furnishing all labor (including flagging costs), materials (including construction area signs), tools, equipment, traffic control plans and revisions, and incidentals, and for doing all the work involved in placing, removing, storing, maintaining, moving to new locations, replacing and disposing of the components of the traffic control including lights, channelizers (surface mounted), temporary railing (Type K) markers, delineators, temporary striping and pavement marking, barricades, portable flashing beacons, flashing arrow signs, portable changeable message signs, as shown on the Plans, as specified in the Standard Specifications and these Special Provisions, and as directed by the Engineer.

Full compensation for removing and salvaging the traffic control equipment and materials that are to be reused or reset in the project shall be considered as included in the contract lump sum (LS) price paid for traffic control and no additional compensation will be allowed therefore.

Failure of the Contractor to maintain the required lane widths or failure to adhere to the work hours per the Project Specific Scope of Work and Traffic Control of the Technical Provisions will result in a permanent payment deduction of $500 for each Incident that the Contractor fails to comply. An Incident is defined as the issuance of a written Correction Action Notice by the Engineer or his representative to the Contractor.

There will be a limit of one (1) Incident per four (4) hour time period and two (2) incidents per working day. The payment deduction is in addition to the City's right to suspend work per Section 7-10.4.7 of the General Provisions.

Partial payment for traffic control shall be based on the percentage of total value of work completed on the other items listed under each schedule as of each progress pay estimate.

TEMPORARY VIDEO DETECTION SYSTEM (BID ITEM NOS. 7, 85, AND 95)

The Contractor shall install, maintain, and operate temporary video detection system for the purpose of replacing pavement detective loops and facilitate shifting of travel lanes over the length of the contract duration, and as directed by the Engineer.

1.0 Modular Video Detection System for Wireless or Wired Camera(s)

1.1 General - This specification sets forth the requirements for a vehicle detection system that detects vehicles on a roadway using only video images of vehicle traffic. All equipment shall be currently in new, unused condition and of current manufacture.

1.2 System Hardware - The video detection system (VDS) shall consist of one to four video cameras, a video detection processor (VDP) capable of processing from one

to four video sources, either wired or wireless, wireless video transmission receiver, receiver antenna, and a pointing device. The number of cameras required will be shown on the Plans.

1.3 System Software - The system shall include the latest software that detects vehicles in multiple lanes using only the video image. Detection zones shall be defined using only an on board video menu and a pointing device to place the zones on a video image. Up to eight detection zones per camera view shall be available. If a separate computer is required to program the detection zones, one shall be configured appropriately, installed into the controller cabinet for the duration of the project, and secured using a cable locking mechanism.

2.0 Functional Capabilities

2.1 Available System Configuration - The VDS will be deployed at locations where site conditions and roadway geometry vary. The VDS system may also be deployed at locations where existing cabinets or equipment vary. Existing site configurations will dictate the availability of cabinet space and VDS usage.

The VDS shall be a quad-channel rack mounted system designed for use in either NEMA TS-1 or Type 333 cabinets.

The VDS shall support wireless video transmission between the camera sensor and VDP shall also be available from the VDS manufacturer.

Wired camera systems shall be able to transmit NTSC or PAL video signals, with minimal degradation, up to 1,000 feet under ideal conditions.

2.2 System Interfaces – The following interfaces shall be provided. If a computer is supplied with the installation as allowed in 1.3 of this Technical Provision, the computer may provide the required interfaces in lieu of the detection hardware.

2.2.1 Video Input - Each video input shall accept RS170 (NTSC) signals from an external video source (camera sensor or VCR). The interface connector shall be BNC type and shall be located on the front of the video processing unit. The video input shall have the capability to select 75-ohm or high impedance (Hi-Z) termination.

2.2.2 Video Lock LED - A LED indicator shall be provided to indicate the presence of the video signal. The LED shall illuminate upon valid video synchronization and turn off when the presence of a valid video signal is removed.

2.2.3 Video Output - One video output shall be provided. The video output shall be RS170 or CCIR compliant and shall pass through the input video signal. For multi-channel video input configurations, a direct means of selecting the input signal to be relayed to the output shall be provided. The video output shall have the capability to show text and graphical overlays to aid in system setup. The overlays shall display real-time actuation of detection

zones upon vehicle detection or presence. Overlays shall be able to be turned off by the user. Control of the overlays and video switching shall also be provided through the serial communications port. The video output interface connector shall be BNC type.

2.2.4 Communications - A serial (EIA-232) or Ethernet communications port shall be provided on the front panel. The serial communications interface shall allow the user to remotely configure the system and/or to extract calculated vehicle/roadway information. The interface protocol shall be documented or interface software shall be provided. Each VDS shall have the capability to be addressable and be capable of operating with other devices of the same type on the same communication channel.

2.2.5 Contact Closure Output – Open collector contact closure outputs shall be provided. Four (4) open collector outputs shall be provided. Additionally, the VDPs shall allow the use of extension modules to provide up to 24 open collector contact closures per camera input. Each open collector output shall be capable of sinking 30 mA at 24 VDC. The open collector output will be used for vehicle detection indicators as well as discrete outputs for alarm conditions.

2.2.6 Detection LEDs – LEDs shall be provided on the front panel. The LEDs shall illuminate when a contact closure output occurs. Rack-mounted video processors shall have a minimum of four LEDs. Rack-mounted extension modules shall have two or four LEDs to indicate detection.

2.2.7 Mouse Port – A USB mouse shall be provided on the front panel of the rack mount video processing unit. The mouse port shall not require special mouse software drivers. The mouse port shall be used as part of system setup and configuration. A mouse shall be provided with each video processor.

2.3 General System Functions – Detection zones shall be programmed via a Graphical User Interface (GUI) and a mouse. The GUI shall facilitate placement of detection zones by drawing over the selected video image, and setting of zone parameters or to view system parameters. A separate computer shall not be required for programming detection zones or to view system operation.

The VDP shall detect vehicles in real time as they travel across each detection zone.

The VDP shall default to a safe condition, such as a constant call on each active detection channel, in the event of unacceptable interference with the video signal.

The system shall be capable of automatically detecting a low-visibility condition such as fog and respond by placing all defined detection zones in a constant call mode. A user-selected output shall be active during the low-visibility condition that can be used to modify the controller operation if connected to the appropriate

controller input modifier(s). The system shall automatically revert to normal detection mode when the low-visibility condition no longer exists.

3.0 Vehicle Detection – Up to eight detection zones per camera input shall be supported and each detection zone can be sized to suit the site and the desired vehicle detection region.

A single detection zone shall be able to replace multiple inductive loops and the detection zones shall be able to be combined to indicate vehicle presence on a single phase of traffic movement.

The VDP's memory shall be non-volatile to prevent data loss during power outages.

When a vehicle is detected within a detection zone, the GUI shall visually indicate activation on the video image overlay display to confirm the detection of the vehicle.

Detection shall be at least 98% accurate in good weather conditions, with slight degradation possible under adverse weather conditions (e.g. rain, snow, or fog) which reduce visibility. Detection accuracy is dependent upon site geometry, camera placement, camera quality and detection zone location, and these accuracy levels do not include allowances for occlusion or poor video due to camera location or quality.

The VDP shall provide dynamic zone reconfiguration (DZR). DZR enables normal operation of existing detection zones when one zone is being added or modified during the setup process. The VDP shall output a constant call on any detector channel corresponding to a zone being modified.

The VDP shall process the video input from each camera at 30 frames per second. Multiple camera processors shall process all video inputs simultaneously.

The VDP shall output a constant call for each enabled detector output channel if a loss of video signal occurs. The VDP shall output a constant call during the background learning period.

Detection zone outputs shall be configurable to allow the selection of presence, pulse, extend, and delay outputs. Timing parameters of pulse, extend, and delay outputs shall be user definable between 0.1 to 25.0 seconds.

4.0 VDP Hardware – The VDP and interface module shall be specifically designed to mount in a standard detector rack, using the edge connector to obtain power and provide contact closure outputs. No adapters shall be required to mount the VDP or interface module in a standard detector rack. Detector rack rewiring shall not be required.

The interface module shall be available to avoid the need of rewiring the detector rack, by enabling the user to plug an extension module into the appropriate slot in the detector rack. The extension module shall be connected to the VDP by a cable with modular connectors, and shall output contact closures in accordance with user selectable channel assignments.

4.1 Input Power – The DP and interface module shall be powered by 12/24 volts DC.

4.2 Detection Outputs – The VDP and interface module shall include detector output pin out compatibility with industry standard detector racks.

4.3 Video Inputs – The VDPs shall include one BNC video input connection per camera to be installed, suitable for composite video inputs. The video input shall include a switch selectable 75-ohm or high impedance termination to allow camera video to be routed to other devices, as well as input to the VDP for vehicle detection.

4.4 Video Outputs – The front of the VDP shall include one BNC video output providing real time video output that can be routed to other devices.

4.5 Mechanical – The VDP shall operate satisfactorily in a temperature range from -34 °C to +74 °C and a humidity range from 0%RH to 95%RH, non-condensing as set forth in NEMA specifications.

The front panel of the VDP shall have detector test switches to allow the user to place calls on each channel. The test switch shall be able to place either a constant call or a momentary call depending on the position of the switch. The front face of the VDP shall contain indications, such as LED displays, to enable the user to view real time detections for each channel of detection when the system is operational.

5.0 Wireless Camera and Receiver – Wireless video cameras used for traffic detection shall be furnished by the VDS supplier and shall be qualified by the supplier to ensure proper system operation.

The wireless camera shall produce a useable video image of the bodies of vehicles under all roadway lighting conditions, regardless of time of day. The minimum range of scene luminance over which the camera shall produce a useable video image shall be the minimum range from nighttime to daytime, but not less than the range 0.1 lux to 10,000 lux for monochrome and 1.0 lux to 10,000 lux for color.

The wireless camera shall use a DSP sensing element and shall output video with a resolution of not less than 470 lines. The imager shall have a minimum effective area of 768(h) x 494(v) pixels. The wireless camera shall include an electronic shutter control based upon average scene luminance and shall be equipped with a factory adjusted manual iris or auto iris lens.

The imager luminance signal-to-noise ratio (S/N) shall be more than 50dB. The camera shall utilize automatic white balance.

The wireless camera shall include a variable focal length lens with variable focus that can be adjusted, without opening up the camera housing, to suit the site geometry by means of a portable interface device designed for that purpose and manufactured by the detection system supplier. The horizontal field of view shall be adjustable from 10 to 50

degrees minimum. A single camera configuration shall be used for all approaches in order to minimize the setup time and spares required by the user.

The lens shall also have an auto-focus feature with a manual override to facilitate ease of setup. The camera shall incorporate the use of preset positioning that store zoom and focus positioning information. The camera shall have the capability to recall the previously stored preset upon application of power.

The wireless camera electronics shall include Automatic Gain Control (AGC) to produce a satisfactory image at night.

The wireless camera shall be housed in a weather-tight sealed enclosure. The enclosure shall be 6061 anodized aluminum or better. The housing shall be field rotatable to allow proper alignment between the camera and the traveled road surface.

The enclosure shall be designed so that the pan, tilt, and rotation of the camera assembly can be accomplished independently without affecting the other settings. The glass face on the front of the enclosure shall have an anti-reflective coating to minimize light and image reflections.

The wireless camera enclosure shall be equipped with a sunshield. The sunshield shall include a provision for water diversion to prevent water from flowing in the camera's field of view. The camera enclosure with sunshield shall be less than 6" diameter, less than 18" long, and shall weigh less than 10 pounds when the camera and lens are mounted inside the enclosure.

The wireless camera enclosure shall include a proportionally controlled heater to assure proper operation of the lens shutter at low temperatures and prevent moisture condensation on the optical faceplate of the enclosure.

When mounted outdoors in the enclosure, the wireless camera shall operate satisfactorily in a temperature range from -34 °C to +60 °C and a humidity range from 0% RH to 100% RH.

The wireless camera shall be powered by 120-240 VAC 50/60 Hz. The camera shall also have a 12 VDC option for battery/solar applications. Power consumption shall be 45 watts or less under all conditions.

Recommended wireless camera placement height shall be 33 feet (or 10 meters) above the roadway, and over the traveled way on which vehicles are to be detected. For optimum detection the camera should be centered above the traveled roadway. The wireless camera shall view approaching vehicles at a distance not to exceed 350 feet for reliable detection (height to distance ratio of 10:100). Camera placement and field of view (FOV) shall be unobstructed and as noted in the installation documentation provided by the supplier.

The wireless camera enclosure shall be equipped with separate, weather-tight connections for power and setup video cables at the rear of the enclosure. These connections may also allow diagnostic testing and viewing of video at the camera while

the camera is installed on a mast arm or pole using a lens adjustment module (LAM) supplied by the VDS supplier. Video and power shall not be connected within the same connector.

The video signal output by the camera shall be monochrome or color meeting NTSC and PAL format standards and shall be able to transmit VDP-usable video signals up to 1,000 feet. The video signal shall be fully isolated from the camera enclosure and power cabling.

The wireless camera system shall be able to transmit a composite video signal, with minimal signal degradation, up to 300 feet under normal conditions and up to 500 feet under ideal electromagnetic interference conditions. Adjacent sources of electromagnetic radiation, or the absence of a direct line of sight between transmitter and receiver antennas, may result in video signal degradation.

The wireless video transmitter shall be integrated into the camera enclosure. External wireless video transmitter equipment will not be allowed.

Wireless transmission equipment shall operate in an unlicensed 2.4 GHz microwave frequency band (2.400 GHz to 2.483 GHz) and shall be in compliance with FCC Part 15 regulations.

The integrated camera / transmitter system shall be FCC Part 15.249 compliant. Radiated field strength shall be less than 50 mV/meter at a distance of 3 meters. Appropriate proof of compliance shall be provided. The FCC certification identifier shall also be affixed to the wireless camera system in accordance with FCC regulations.

The wireless camera antenna shall be located on the camera enclosure.

The wireless camera shall operate on one of four available carrier frequencies in the 2.4 GHz band.

The wireless receiver shall have provisions to allow the user to select the receive frequency for each video output port.

The video output of the wireless receiver shall be 1 volt peak-to-peak NTSC format. The video output connector shall be BNC type.

The wireless receiver shall have provisions to measure receive signal strength (RSS). The range of the RSS signal shall be 0 to 4 volts DC.

The receiver antenna system shall increase the received signal strength by a minimum gain of +17dB with typical LMR-400 coax runs of 75 feet or less and not less than +12dB with LMR-400 coax runs of up to the 150 foot maximum when measured at the receiver module antenna connector.

6.0 Wired Camera – The video cameras used for traffic detection shall be furnished by the VDP supplier and shall be qualified by the supplier to ensure proper system operation.

The camera shall produce a useable video image of the bodies of vehicles under all roadway lighting conditions, regardless of time of day. The minimum range of scene luminance over which the camera shall produce a useable video image shall be the minimum range from night time to day time, but not less than the range 1.0 lux to 10,000 lux for color.

The camera shall use a CCD sensing element and shall output video with a resolution of not less than 470 lines.

The camera shall include an electronic shutter control based upon average scene luminance and shall be equipped with a factory adjusted manual iris or auto-iris lens.

The camera shall include a variable focal length lens with variable focus that can be adjusted, without opening up the camera housing, to suit the site geometry by means of a portable interface device designed for that purpose and manufactured by the detection system supplier. The horizontal field of view shall be adjustable from 10 to 50 degrees minimum. A single camera configuration shall be used for all approaches in order to minimize the setup time and spares required by the user.

The camera electronics shall include Automatic Gain Control (AGC) to produce a satisfactory image at night.

The camera shall be housed in a weather-tight sealed enclosure. The housing shall be field rotatable to allow proper alignment between the camera and the traveled road surface.

The camera enclosure shall be equipped with a sunshield. The sunshield shall include a provision for water diversion to prevent water from flowing in the camera's field of view. The camera enclosure with sunshield shall be less than 6" diameter, less than 18" long, and shall weigh less than 10 pounds when the camera and lens are mounted inside the enclosure.

The camera enclosure shall include a proportionally controlled heater to assure proper operation of the lens shutter at low temperatures and prevent moisture condensation on the optical faceplate of the enclosure.

When mounted outdoors in the enclosure, the camera shall operate satisfactorily in a temperature range from -34 °C to +60 °C and a humidity range from 0% RH to 100% RH.

The camera shall be powered by 120-240 VAC 50/60 Hz. The camera shall have a 12 VDC option for battery/solar application. Power consumption shall be 45 watts or less under all conditions.

Recommended camera placement height shall be 33 feet (or 10 meters) above the roadway, and over the traveled way on which vehicles are to be detected. For optimum detection the camera should be centered above the traveled roadway between #1 left turn pocket and #1 through lane on mast arms with Astro brackets and 6-foot aluminum poles. The camera shall view approaching vehicles at a distance not to exceed 350 feet for reliable detection (height to distance ratio of 10:100). Camera placement and field of

view (FOV) shall be unobstructed and as noted in the installation documentation provided by the supplier.

The camera enclosure shall be equipped with separate, weather-tight connections for power and setup video cables at the rear of the enclosure. These connections may also allow diagnostic testing and viewing of video at the camera while the camera is installed on a mast arm or pole using a lens adjustment module (LAM) supplied by the VDP supplier. Video and power shall not be connected within the same connector.

The video signal output by the camera shall be color meeting NTSC and PAL format standards.

The video signal shall be fully isolated from the camera enclosure and power cabling.

7.0 Installation

7.1 Wired Cameras – The coaxial cable to be used between the camera and the VDP in the traffic cabinet shall be Belden 8281 or better. This cable shall be suitable for installation in conduit or overhead with appropriate span wire. BNC plug connectors should be used at both the camera and cabinet ends. The coaxial cable, BNC connector, and crimping tool shall be approved by the supplier of the video detection system, and the manufacturer's instructions must be followed to ensure proper connection.

7.2 Wireless Cameras – The antenna cable for the wireless receiver shall be high-frequency, low-loss 50-ohm type. The antenna coax cable shall be Times Microwave LMR-400. The antenna coax cable loss shall be no more than 6.8 dB/100 feet at 2.5 GHz.

Wireless cameras shall be connected to the safety light circuit or via contractor furnished and installed 16 AWG three conductor cable with a minimum outside diameter of 0.325 inch and a maximum diameter of 0.490 inch. All cabling shall comply with the National Electric Code, as well as local electrical codes. Other methods to power wireless cameras will require Engineer's approval.

The video detection camera shall be installed by factory-certified installers as recommended by the supplier and documented in installation materials provided by the supplier. Proof of factory certification shall be provided.

7.3 Limited Warranty – The supplier shall provide a limited three-year warranty on the video detection camera. See suppliers standard warranty included in the Terms and Conditions of Sale documentation.

During the warranty period, technical support shall be available from the supplier via telephone within 4 hours of the time a call is made by a user, and this support shall be available from factory-certified personnel or factory-certified installers.

7.4 Maintenance and Support – The supplier shall maintain an adequate inventory of parts to support maintenance and repair of the video detection system. These

parts shall be available for delivery within 30 days of placement of an acceptable order at the supplier's then current pricing and terms of sale for said parts.

The supplier shall maintain an ongoing program of technical support for the video detection system. This technical support shall be available via telephone, or via personnel sent to the installation site upon placement of an acceptable order at the supplier's then current pricing and terms of sale for on site technical support services.

Installation or training support shall be provided by a factory-authorized representative and shall be a minimum IMSA-Level II Traffic Signal Technician certified.

All product documentation shall be written in the English language.

8.0 Configuration – The Contractor shall configuration and fine tune detection zones for each stage of traffic control. Configuration shall be scheduled to occur at the same time that the traffic control is moved. Supplier's representative shall be present for zone configuration and reconfiguration.

9.0 Payment – The contract unit price paid per lump sum (LS) for "Temporary Video Detection System" shall include full compensation for furnishing all labor, materials, tools, equipment, zone configuration, incidentals, and all other appurtenant work as shown on the plans, as specified in these Special Provisions, and as directed by the Engineer. No additional compensation shall be made therefor. Payment will be made on a basis of the percentage of work completed for this bid item.

At the end of construction as determined by the Engineer, the Contractor shall properly remove, salvage, package and deliver the complete video detection system to the City and demonstrate that the VDS is in full working order.

CLEARING, GRUBBING, AND REMOVALS (BID ITEM NO. 8)

Clearing and grubbing shall be performed in accordance with the plans, of the provisions of Section 300-1, "Clearing and Grubbing," of the Standard Specifications and these Special Provisions, and shall include, but not be limited to, the following:

1. Removal and disposal of tree stumps (grinding), shrubs, ground cover, and other vegetative material.

2. All trees and shrubs less than 10 ft directly above the entire sidewalk surface shall be trimmed and removed by the Contractor to allow a clear path of travel for pedestrians.

3. Removal and disposal of decorative landscape rocks, edging, brick, pavers, railroad ties, or any other decorative landscape treatments.

4. Removal and disposal of boulders, rock, or Portland Cement Concrete (PCC).

5. Removal and disposal of signs, poles, and posts, including foundations. Holes resulting from removal of existing poles and posts shall be filled or patched with like materials.

6. Existing inlets, rip-rap, slotted drains, drainage pipes, bulkheads, drop inlet structures, and where any portion of such structure is within 3 ft of the grading plane in the excavation areas, or within 1 ft of original ground in embankment areas, or where shown on the plans to be removed, shall be completely removed and disposed of accordingly.

7. Removal and disposal of existing drainage inlet structure, catch basins, and PCC Local Depression or asphalt concrete (AC) apron.

8. Any and all saw cutting.

9. Removal and disposal of existing AC berms, miscellaneous AC, and PCC.

10. Removal of all curb and gutter, retaining curb, cross gutters, access landings, and spandrels shall be replaced within three (3) calendar days. The AC patch shall be placed within two (2) working days after the curb and gutter, cross gutters, and spandrels are replaced. Removal of all sidewalks shall be replaced within three (3) calendar days.

11. Removal and disposal of any abandoned utilities that may interfere with the improvements, including plugging of pipes or conduits.

12. Removal and disposal of steel vent pipe of the abandoned waterline or irrigation line, and cap three (3) feet below grade.

13. Removal and disposal of Banner Poles and Footings.

14. Removal, relocation, and disposal of existing Bus Shelter benches and structures as noted on the project plans.

15. Removal and disposal of all raised pavement markers not conforming to the approved plan or conflicting with the proposed striping as shown on the plans in accordance with Subsection 312-3, "Removal," of the Standard Specifications.

16. Removal and disposal of existing striping conflicting with Stage Construction temporary striping.

17. The Contractor shall dispose of all materials not being salvaged outside of the right of way and shall pay for all costs of disposal. These materials include, but are not limited to, masonry walls, AC paving, PCC, and conflicting striping.

18. Irrigation system relocation. Any irrigation systems in conflict with the proposed improvements that are removed, damaged, disturbed, or broken shall be modified, repaired, and/or replaced to be operable and provide full irrigation coverage to the areas requiring irrigation using new materials, equal or better than the original materials, with 3/4 in Schedule 40 PVC being the minimum acceptable for underground lines and 1/2 in

Schedule 80 being minimum acceptable for risers and with the systems not being out of operation for more than two (2) days.

19. Removal of abandoned street light and signal pole foundations complete and including backfill of the site with material of similar consistency as the native material.

20. All trees, shrubbery, and lawns deprived of normal irrigation watering due to a disruption of service caused by the Contractor's operations shall be regularly and thoroughly irrigated by the Contractor so that said plantings will not be damaged. If any trees, shrubbery, or lawns die or suffer unacceptable damage as a result of or precipitated by the Contractor's operations, the Contractor shall replace same with the same plant species and size. Existing grass lawns within areas that must be excavated and/or re-graded shall be cut into approximate1 ft squares, removed, protected, cared for, and replaced as soon as possible. Dead, dying, and unacceptably damaged grass shall be replaced with new grass sod.

21. Stockpiling of materials within the right of way, city parking lots, or other city improved property shall not be allowed unless otherwise approved by the Engineer.

22. Cleaning of all under-sidewalk drain pipes.

23. Removal and disposal of all existing concrete pads identified on the plans.

24. Removal and disposal of all existing fencing and gates identified on the plans.

25. Removal and disposal of all existing concrete and asphalt concrete driveways identified on the plans.

26. Removal and disposal of the existing metal canopy structure identified on the plans at 11010 Perris Boulevard.

27. Removal and disposal of all existing pilasters identified on the plans.

28. Removal and disposal of all existing trees identified on the plans.

29. Removal and disposal of all existing wall and wall footings as shown on the plans.

30. Removal and disposal of all existing retaining walls as shown on the plans.

31. Self-propelled drop hammers will not be allowed for removals.

Portland Cement Concrete, Asphalt Concrete, trees, and green waste that has been removed shall be disposed of at a recycling plant. The Contractor shall provide the City with the weight certification of recycling and the required monthly Solid Waste Disposal and Recycling Reports.

Full compensation for all costs involved in removal and recycling of Portland Cement Concrete and Asphalt Concrete removed from the project site shall be considered as included in the contract unit price for "Clearing, Grubbing, and Removals" for furnishing all labor, materials, tools, equipment, hauling and incidentals, no additional compensation will be allowed therefore.

The unit price for removal, relocation, and disposal of bus shelters shall include full compensation for, but not limited to, furnishing all labor, materials, tools, equipment, and incidentals for doing all work involved for the removal, relocation, and disposal of bus shelters, and no additional compensation shall be allowed therefore.

The Contractor is encouraged to visit each private property to familiarize themselves with the scope of removals and improvements required.

At the individual private properties, it is anticipated that removals, including but not limited to trees, tree stumps, shrubs, miscellaneous concrete, electrical systems, irrigation systems, fencing and gates that may not be identified in the plans will be encountered and need to be removed in order to build the improvements as detailed in the plans. All removals associated with private properties will be considered as miscellaneous removals and payment will be considered as included in the price paid for Clearing, Grubbing, and Removals.

Any private irrigation in conflict with the proposed improvements shall be properly capped and abandoned. Any remaining sprinkler heads shall be reconfigured to ensure proper coverage of private landscape areas.

Any private electrical facilities, including but not limited to motorized gates and electrical pullboxes, in conflict with the proposed improvements shall be properly removed to the source of power, including breakers, per building codes.

The contract unit price paid per lump sum (LS) for "Clearing, Grubbing, and Removals" shall include full compensation for furnishing all labor, materials, tools, equipment, reports, and incidentals for doing all work involved for all the items specified herein and in Subsection 300-1.4, "Payment," of the Standard Specifications and no additional compensation shall be allowed. Payment will be made on a basis of the percentage of work completed for this bid item.

If the Contractor does not provide the weight certification of recycling and the required monthly Solid Waste Disposal and Recycling Reports, then the portion of payment for Clearing, Grubbing, and Removals will be withheld until the weight certification and reports are provided.

ADJUST EXISTING STREET SURVEY MONUMENT (BID ITEM NOS. 9, 86, AND 96)

Existing survey markers, monuments, and benchmarks shall be protected in place. Monument frames, covers, and sleeves shall be furnished and adjusted to finished grade.

Existing survey markers, monuments, and benchmarks not conforming to the proposed roadway finish surface shall remain accessible by means of an approved sleeve and lid per Moreno Valley Standard Plan No. 601A, or by other methods approved by the Engineer.

The contract unit price paid per each (EA) for "Adjust Existing Street Survey Monument" shall be measured in accordance with Subsection 301-1.7, "Payment," of the Standard Specifications, and shall include full compensation for furnishing all labor, materials, tools, and equipment, and for doing all the work involved in adjusting monument frames, covers, and sleeves to finished grade, complete in place, and no additional compensation will be allowed therefore.

AC PAVEMENT REMOVAL (BID ITEM NOS. 10, 97, AND 108)

The outline area of the asphalt concrete pavement to be removed shall be cut on a neat line with a power-driven saw to minimum depth of 2 in before removing the surfacing. The Contractor will not be required to sawcut the pavement where the join line or cut line is cold milled.

If the Contractor chooses to remove the asphalt concrete by cold milling then the existing asphalt concrete shall be cold milled or ground in accordance with Subsection 302-1.1, "Cold Milling of Existing Pavement," of the Standard Specifications and these Specifications.

Add to Subsection 302-1.2, "Milling Machine," the following:

> At least two full time flag persons shall be assigned to the milling machine for traffic control when working on streets open to traffic.

The Contractor shall take care not to contaminate the millings with non-aggregate base material, including disintegrated granite.

The asphalt concrete, including aggregate base, shall be disposed of at a recycling plant. The Contractor shall provide the City with the weight certification of recycling in tons of asphalt concrete and the required monthly Solid Waste Disposal and Recycling Reports.

Asphalt concrete and asphalt concrete berm removal associated with curb and gutter, cross gutter and local depression, sidewalk and driveway work will be considered as miscellaneous removals and payment will be considered as included in the price paid for Clearing, Grubbing, and Removals.

The contract unit price paid per square yard (SY) for "AC Pavement Removal" shall include full compensation for, but not limited to, furnishing all labor, materials, tools, equipment, saw cutting, loading, hauling, reports, and incidentals, for doing all work involved in asphalt concrete removal, and no additional compensation will be allowed therefore. If the Contractor does not provide the required monthly Solid Waste Disposal Reports, then payment will be withheld until the reports are provided.

COLD MILL EXISTING AC PER PLANS (BID ITEM NOS. 87, 88, AND 98)

Existing asphalt concrete shall be cold milled or ground in accordance with Section 302-1, "Cold Milling of Existing Pavement," of the Standard Specifications, and these Specifications.

Add to the second paragraph of Subsection 302-1.1, "General," shall include the following:

At least two full time flag persons shall be assigned to the milling machine for traffic control when working on streets open to traffic.

The asphalt concrete millings shall be disposed in accordance with Subsection 3021.8 of the Standard Specifications.

The Contractor shall take care not to contaminate the millings with non-aggregate base material, including disintegrated granite.

The contract unit price paid per square foot (SF) for "Cold Mill Existing AC Depth 2" per Plans" and "Cold Mill Existing AC Variable Depth (0" to 2") per Plans " shall include full compensation for furnishing all labor, materials, tools, equipment, and incidentals, and for doing all work involved in cold milling asphalt concrete pavement and disposing the material removed, as specified in these Special Provisions, as directed by the Engineer and no additional compensation shall be allowed therefore.

CRACK SEAL EXISTING AC PAVEMENT (BID ITEM NO. 89)

Pavement cracks 1/4" wide and larger shall be sealed. Pavement cracks 1/8" to 1" wide shall be cleared of all loose particles of dust, dirt, and laitance with oil-free compressed air immediately preceding the sealing operation. Cracks shall be routed out as necessary to provide a reservoir for the sealer that will have a depth of l" to 1 1/2".

The crack filling material shall be a cold-applied, polymer modified petroleum emulsion (Western Emulsion Inc. "P.A.S.S." or approved equivalent) or a hot-applied rubberized asphalt (Crafco Polyflex or approved equivalent). The crack filling material must not be modified or diluted in any way.

A wand and nozzle type application shall be used to fill all cracks with crack filling material. Crack filling material shall be applied in two applications with the possibility of additional applications to fill the crack within the allowable tolerance. The cracks must be filled to the surface and not overfilled or applied to the top of adjoining pavement or concrete surfaces. The cracks shall be squeegee immediately after the sealant has been applied to insure conformity with the pavement surface. The crack filling material shall then be allowed to penetrate and sink into the crack area for a minimum of one hour. Each crack must then have a second application of crack filler material applied in the crack area only to within + 0.01' of the adjoining pavement surface. If the material is a cold-applied, polymer modified petroleum emulsion, sand will be applied over the crack filling material after the second application, covering a minimum of 1 1/2 inches each side of the crack and not more than 3/4 inch higher than the top of the pavement. The Contractor shall be responsible for the removal of all excess sand which shall be removed within three hours after being applied.

In the areas where slurry seal will be applied, the crack sealing operations shall be completed a minimum of two (2) weeks prior to the application of slurry seal.

Areas to be crack sealed will be as designated in the field by the Engineer.

The estimated quantity shown on the plans and on the Bidding Schedule for crack sealing shall be the final pay quantity to be paid for.

The contract unit price paid per square foot (SF) for "Crack Seal Existing AC Pavement" shall include full compensation for furnishing all labor, materials, tools, and equipment, and for doing all the work involved in crack sealing complete in place as shown on the plans, and specifications, or as directed by the Engineer.

UNCLASSIFIED EXCAVATION (BID ITEM NOS. 11, 99, AND 109)

Unclassified Excavation shall be completed in accordance with Section 300-2, "Unclassified Excavation," of the Standard Specifications. Unclassified excavation shall consist of all excavation unless separately designated as remedial grading.

Disposal Site – The Contractor shall specify the route and the disposal site for the material which is required to be removed and hauled away. The Contractor shall provide this information at the Pre-Construction Conference.

Project specified soils and geotechnical investigations have been conducted and the results of the subject investigations are included in Appendix K and are on file with the City as reference documents.

Where a portion of existing surfacing is to be removed, the outline of the area to be removed shall be cut on a neat line with a power-driven saw to a minimum depth of 50 mm (2 in) before removing the surfacing. The Contractor will not be required to sawcut the pavement where the join line or cut line is cold milled. Full compensation for sawcutting existing surfacing shall be considered as included in the lump sum price paid for roadway excavation and no additional compensation will be allowed therefore.

Full compensation for removal of base and asphalt concrete surfacing not cold milled, excavating, loading, hauling, depositing, spreading, and for scarifying and recompacting subgrade shall be considered as included in the lump sum price paid for roadway excavation and no additional compensation will be allowed therefore.

Payment for "Unclassified Excavation" shall be on a cubic yard (CY) basis as described in Section 300-2.8 of the Standard Specifications and shall include full compensation for furnishing all labor, materials, tools, equipment, and incidentals for doing all work involved for quarrying and ripping, loading, disposing of surplus materials, stockpiling and hauling it to its final location and no additional compensation shall be made therefore. The estimated quantities reflected in bid schedules for these bid items are designated with the letter "F," therefore, in accordance with Section 9-1.4, said estimated quantities shall be the final pay quantities.

UNCLASSIFIED FILL

Unclassified fill shall be completed in accordance with Section 300-4, "Unclassified Fill," of the Standard Specifications. However, the top 12 inches of subgrade and topsoil shall have a minimum relative compaction of 95 percent.

Embankment Areas

Areas of embankment heights less than 2 feet shall be scarified 12 inches below the top of the original ground and compacted to 95 percent of the laboratory maximum dry density.

Areas of embankment heights between 2 feet and 4 feet (west embankment from Sta 82+00 to Sta 87+00) shall be removed 12 inches and scarified an additional 12 inches below the top of the original ground and compacted to 95 percent of the laboratory maximum dry density.

Areas of embankment heights between 4 feet and 6 feet (west embankment from Sta 87+00 to Sta 90+00) shall be removed 24 inches and scarified an additional 12 inches below the top of the original ground and compacted to 95 percent of the laboratory maximum dry density.

Areas of embankment heights between 6 feet and 10 feet (west embankment from Sta 90+00 to Sta 92+00) shall be removed 36 inches and scarified an additional 12 inches below the top of the original ground and compacted to 95 percent of the laboratory maximum dry density.

Stage 1 will require imported material to construct embankment slopes.

Payment for "Unclassified Fill" shall be included in the Contract price for "Unclassified Excavation" and shall include full compensation for furnishing all labor, materials, tools, equipment, and incidentals for doing all work involved for fill, rounding tops and toe of fills, loading, placement, disposing of surplus materials and no additional compensation shall be made therefore.

SUBGRADE PREPARATION

Subgrade Preparation shall conform to the requirements of Subsection 301-1, "Subgrade Preparation" and these Technical Provisions.

Pavement Areas

In roadway areas receiving pavement surfaces, remove (and place back after scarification below) the upper 9 inches below the bottom of the pavement section and scarify an additional 6 inches below the removed portion. The entire 15 inches below the bottom of the pavement section shall be compacted to 95 percent of the laboratory maximum dry density.

Replace the second and third paragraph of Subsection 301-1.2, "Preparation of Subgrade," with the following:

> The site soils shall be removed to the subgrade level as shown on the plans in the areas to receive the pavement structural section. After rough grading has been completed, the exposed subgrade shall be scarified to a depth of 8 to 12 inches. The loosened material shall then be worked to a finely divided condition and all rocks larger than 75 mm (3 in) in diameter shall be removed. The moisture content shall be brought to minus 1 percent of optimum or wetter by the addition of water, by the addition and blending of dry suitable material, or by the drying of existing material. The material shall then be compacted by approved equipment to the specified relative compaction.

Add the following paragraph to the end of subsection 301-1.2, "Preparation of Subgrade":

> Contractor is to allow testing of at the subgrade minus 9 inches for R-Value determination. Testing of material will be provided by the Engineer. If the minimum R-Value requirement of 25 is achieved, then Contractor will continue to proceed with the subgrade preparation. If the tested R-Value is less than 25, a thicker section may be provided by the Engineer to the Contractor prior to proceeding with the subgrade preparation.

Replace the first paragraph of Subsection 301-1.3, "Relative Compaction," with the following:

The subgrade soils shall be compacted to 90 percent of the maximum dry density (ASTM D1557). The upper six inches of the subgrade soils shall be compacted to 95 percent relative compaction (ASTM D1557) and should be well moisture conditioned to near optimum and kept in this condition until the pavement section is constructed.

Payment for subgrade preparation will be considered as included in the item of work for which the subgrade is prepared and no additional compensation will be allowed therefor.

ASPHALT RUBBER HOT MIX (ARHM) WET PROCESS (BID ITEM NOS. 12, 90, 100, AND 110)

Asphalt Rubber Hot Mix Pavement shall be constructed in accordance with Section 203-11 and 302-5 of the Standard Specifications and these technical provisions.

Delete the first paragraph of Subsection 203-11.2.3, "Crumb Rubber Modifier (CRM)," and replace with the following:

The material shall consist of a combination of scrap tire CRM and high natural CRM meeting the requirements of this subsection. Scrap tire CRM shall consist of ground or granulated rubber derived from any combination of automobile tires, truck tires, or tire buffings. The high natural CRM shall consist of ground or granulated rubber derived from a single material that utilizes high natural rubber sources.

Delete the fifth paragraph of Subsection 203-11.2.3, "Crumb Rubber Modifier (CRM)," and replace with the following:

The percentage of high natural CRM shall be equal to 1000 divided by the percentage of natural rubber in the high natural CRM (using whole number percentages), e.g. 1000/40 percent equals 25 percent. The remainder of CRM shall be scrap tires.

The maximum value for Natural Rubber Content in Table 203-11.2.3(B) is hereby deleted.

The sixth (last) paragraph of Subsection 203-11.2.3 is hereby deleted.

Asphalt concrete surface courses shall be Asphalt Rubber Hot Mix, ARHM-GG-C. Contractor shall use PG-64-16 asphalt binder. See AC Hot Mix Asphalt Concrete above for PG-64-16 Asphalt Binder Specification.

Aggregate produced from slag resulting from any steel-making process or from air-cooled iron blast furnace slag shall not be used on this project.

The Asphalt Rubber Hot Mix (ARHM) shall meet the requirements of Section 302-9 of the Standard Specifications

Asphalt concrete surface courses shall be Asphalt Rubber Hot Mix, ARHM-GG-C, wet process, as specified in Section 203-11 and 302-5 of the Standard Specifications with the additions of Section I of OCEMA Std. Plan 1805, "Special Provisions – Asphalt Concrete". The asphalt concrete

pavement shall be constructed in accordance except as modified by Section II of OCEMA Std. Plan 1805, "Special Provision – Asphalt Concrete" and shall conform to the following:

Composition and Grading shall be per Section 203-11.3 of the Standard Specifications. The Contractor shall submit a copy of the asphalt concrete mix design to the City or its designated laboratory a minimum of two weeks prior to the pre-construction conference. The Contractor shall make modifications to the proposed mix design as required by the City or its designated laboratory to insure that the proposed asphalt concrete mix will meet the minimum stability ("S") values. No asphalt concrete shall be placed until such time as the City has approved the Contractor's proposed asphalt concrete mix design.

Binder content for the proposed mix design shall be determined by Cal test 367, using air voids specified in Table 203-11.3(A). Minimum VMA shall be 20 percent as determined by the method described in Asphalt Institute Mix Design Methods for Asphalt Concrete (MS-2). Binder content shall not be less than 7.7 percent or more than 8.5 percent by weight of dry aggregate. Contractor shall provide test results for the proposed mixture at least one week prior to paving. Contractor shall provide test results for the proposed mixture at least one week prior to paving.

TABLE 203-11.3(A)
Air Voids for CalT 367

Material	Air Voids
ARHM Class C, Surface Course	4%
ARHM Class C, Base Course	3%

Binder Content of finished mix shall be verified based on Cal Test 382 using appropriate correction factor. Binder content varying more than .25 percent from target percentage in the mix design shall be cause to not pave the following day until modifications of plant equipment or procedures are made to the satisfaction of the Engineer, which will result in a reduced tolerance for binder content. Variations of Binder content greater than .5 percent from target percentage in the mix design shall be cause to terminate paving immediately.

If AR4000 Asphalt Binder is not available the Contractor shall use PG-64-10 asphalt binder at no additional cost to the City.

Delete the third paragraph of Subsection 203-11.4, "Mixing," and replace with the following:

The proportions of the materials, by total weight of asphalt-rubber binder, shall be 80-percent combined paving asphalt and asphalt modifier, and 20 percent CRM. The temperature of the blended asphalt and modifier shall be between 190 degrees Celsius (375 degrees Fahrenheit) minimum and 226 degrees Celsius (440 degrees Fahrenheit) maximum when the CRM is added. The temperature shall not exceed 6 degrees Celsius (10 degrees Fahrenheit) below the actual flash point of the mixture. The CRM shall be combined and mixed together in an asphalt-rubber mechanical blender meeting the requirements of 203-11.5. The combined asphalt and CRM shall be pumped into a reaction tank or distributor truck meeting the requirements of 203-11.5, Item 3A). The required mixing/reaction time shall be 45 minutes minimum. The temperature of the asphalt-rubber mixture shall be between 190 degrees Celsius (375 degrees Fahrenheit)

minimum to 218 degrees Celsius (425 degrees Fahrenheit) maximum during the reaction period.

After reacting, the asphalt-rubber binder shall conform to the requirements in Table 203-11.4(A). The reaction time shall be the time from complete incorporation of materials into the mix to the time that the asphalt-rubber meets all specifications for reacted material. Any material reacted at lower than specified temperatures or transferred to the storage tank prior to completion of reaction as specified, shall be reacted for a total period of 3 hours prior to use. All materials shall be tested for viscosity and verified as to complete reaction prior to transfer to a storage tank.

Inability to maintain reaction temperatures above specified minimums will be cause to terminate paving operations. Contractor is reminded that if the reaction tank does not have a gas retort heating system capable of raising the temperature of its contents at least 20 degrees per hour, there exists the inherent potential for such below minimum temperatures to become an irreversible condition. Certification was previously provided in the bid that the asphalt-rubber hot mix plant owner, the paving subcontractor, and asphalt-rubber supplier have been made fully aware of these provisions.

Contractor shall test viscosity and record the time of test, the temperature of test, and the viscosity on every tank of asphalt transferred to storage feeding the hot mix plant and provide a copy to the Engineer as requested.

The maximum value for Haake Field Viscosity (Centipose) @ 191 degrees Celsius (375 degrees Fahrenheit), in Table 203-11.4(A) is hereby changed to 2600.

Aggregate produced from slag resulting from any steel-making process or from air-cooled iron blast furnace slag shall not be used on this project.

Add the following to Item 3) of Subsection 203-11.5 "Equipment for Production of Asphalt-Rubber."

Reaction Tank. The asphalt-rubber material shall be held in a reaction tank from the storage tank feeding the ARHM plant, until the reaction is complete. The reaction tank shall have agitation sufficient to increase the viscosity of the mixture to a peak viscosity reading at least 20 percent higher than the viscosity reading of the material measured at a time that the material otherwise meets specifications for reacted material. The time of reaction may be extended, as needed, to produce this result. It shall be the responsibility of the Contractor to demonstrate to the Engineer through viscosity readings at appropriate times that the equipment conforms to these requirements. If this cannot be demonstrated, the reaction time shall be 3 hours. Once established, the reaction time shall be the minimum time for reaction unless there are changes in materials or equipment, in which case a new reaction time shall be established per specifications. The Engineer's decision shall be final.

Storage Tank. After a complete reaction is verified by viscosity readings acceptable to the Engineer, the material shall be held in a storage tank that is fully isolated from material that is not fully reacted. This tank shall be the only tank feeding the ARHM plant.

Prior to placing the ARHM overlay all cracks greater than or equal to 1/4 inch in width shall be sealed with crack sealant. The pavement surface shall be warm, dry, and free of any dust, dirt, or deleterious material before applying the crack sealant. The crack sealant material shall be a Type "D" joint sealant, per section 201-3.7 of the Standard Specifications, and shall be ROADSAVER II by Craftco or approved equal. The Contractor shall submit the crack sealant material specification he intends to use for approval prior to its incorporation into the work.

Asphalt concrete shall be placed with paving machine equipped with a "Preco" attachment or similar device for use in obtaining constant cross-slope and maximum joint quality.

SS-1H tack coat shall be applied at a rate not to exceed one-tenth (1/10) gallon per square yard, uniformly in one coat, on all vertical joins of AC patching and PCC join surfaces and edges against which ARHM is to be placed. Diesel fuel shall not be used for cleaning purposed within the limits of this project.

All surfaces to be overlaid shall be cleaned by the use of an air blower, water or by hand broom. The overlaid surface shall be free of water, dust, or foreign material before tack coat is applied. All raised pavement markers shall be removed prior to the placement of any asphalt concrete overlay. All existing AC slurry seal and/or AC overlay residue shall be removed from the existing PCC gutter lip prior to beginning the paving operations.

Distribution and spreading shall conform to 302-5.5. Atmospheric temperature shall be 50°F and rising.

Revise the third paragraph of Section 302.5.5 to read:

The temperature of the mixture directly behind the paving machine, before the breakdown roller, shall not be lower than 132 C (270 F) or higher than 160 C (320 F), the lower limit to be approached in warm weather and the higher in cold weather.

The Contractor shall utilize a paving machine equipped with an automatic adjusting screed, which is actuated by a 30-foot "ski", for the entire ARHM-GG overlay.

ARHM-GG shall not be placed in lifts that exceed two (2) inches in thickness and shall be placed in one lift. Breakdown compaction shall be performed with a vibratory roller weighing not less than 12 tons for all ARHM-GG compaction.

ARHM-GG shall be thoroughly compacted by rolling. The number of rollers necessary will be established in accordance with Section 302-5.6.1 of the Greenbook Specifications. All compacted ARHM-GG shall have a relative compaction of not less than 95 percent in accordance with Section 302-5.6.2 of the Greenbook Specifications.

Rolling along a joint shall be such that the widest part of the roller is on the hot side of the joint. Join lines between successive runs shall be within 6 inches of lane lines or a minimum of 12 feet outside of the outer most lane line.

"Lots", consisting of 500 tons, will be established for ARHM-GG areas to be tested. The City or its designated laboratory shall perform density testing utilizing a properly calibrated nuclear asphalt-testing device. The City shall pay for all initial testing and a reasonable amount of

retesting utilizing the nuclear asphalt-testing device. If the test results for any lot of ARHM-GG indicate that the relative compaction is below 95 percent the Contractor will be advised that he is not attaining the required relative compaction and that his materials or his procedures, or both, need adjustment. ARHM-GG spreading operations shall not continue until the Contractor has notified the Engineer of the adjustment that will be made in order to meet the required compaction. Core testing of areas not meeting the 95 percent requirement will be conducted by the City's designated lab at the expense of the Contractor. Any and all testing beyond the initial core testing will be at the sole expense of the Contractor.

If the test results for any lot of ARHM-GG continue to indicate that the relative compaction is less than 95 percent after adjustments have been made, the ARHM-GG represented by that lot may be required to be removed and replaced at the Contractor's expense and the Contractor shall suspend all further paving operations until the Contractor can demonstrate to the City that relative compactions of 95 percent can be obtained. It shall be the sole judgment of the City Engineer to determine adequate remedy and/or a reduction in compensation for any lot failing to meet 95 percent relative compaction.

The City's designated laboratory will obtain samples of the ARHM-GG from each lot to perform extraction tests to insure the proper aggregate gradation and asphalt content is being supplied in accordance with the approved ARHM-GG mix design. If the test results for any lot of ARHM-GG indicate that the ARHM-GG does not meet the requirements of the approved mix design the Contractor will be advised that he is not attaining the required composition and grading and that his materials need adjustment. ARHM-GG spreading operations shall not continue until the Contractor has notified the Engineer of the adjustment that will be made in order to meet the approved mix design. If the test results for any lot of ARHM-GG continue to indicate that the composition and grading does not conform to the approved mix design after adjustments have been made, the ARHM-GG represented by that lot shall be removed and replaced at the Contractor's expense and the Contractor shall suspend all further paving operations until the Contractor can demonstrate to the City that the ARHM-GG is in accordance with the approved mix design. The Contractor shall place the ARHM-GG overlay such that joints and seams fall within one (1) foot of the lane line for the new delineation.

The Contractor shall provide for adequate quality control measures to ensure that delivery of asphalt rubber shall be neither too slow nor too fast to prevent stopping of the paving operation and/or cooling of the asphalt rubber material. Material delivery scheduling and handling is critical to provide for optimum compaction opportunity and maximize ride quality performance.

> Rock dust blotter material shall be required immediately after the completion of the "finish rolling" and prior to opening to traffic to prevent bleeding and pickup of the asphalt rubber material.

Rock dust blotter shall be per Section 200-1.2 of the Standard Specifications and shall be uniformly applied using a mechanical spreader, which distributes uniformly at a rate of approximately three pounds per square yard. All excess rock dust blotter shall be removed from the street at the end of each workday. The removal of the rock dust blotter shall include removal from adjacent streets and gutters, as needed. No excess rock dust blotter shall be left on any street after normal work hours. The cost of rock dust blotter application shall be absorbed into the contract unit price bid for ARHM.

Payment for "Asphalt Rubber Hot Mix (ARHM) Wet Process" surface course shall be per the unit price bid per ton (TN). The contract unit price per ton (TN) shall include full compensation for all surface preparation, furnishing all labor, materials, tools equipment, and incidentals and for doing all the work involved, including furnishing and applying the rock dust blotter. Temporary surface work where required by the Owner's Representative for traffic control or other purposes shall be considered included in the price bid Traffic Control and no additional compensation will be allowed therefore.

HOT MIX ASPHALT CONCRETE (AC) (BID ITEM NOS. 13, 101, AND 111)

Asphalt concrete shall meet the requirements of Section 400 of the Standard Specifications and these Technical Provisions:

> Asphalt concrete shall be Type III-B2-PG64-10 for base course and Type III-C3-PG64-10 for surface course.
>
> The Engineer may substitute Type III-D-PG64-10 in place of Type III-C3-PG64-10 for feathering and for "thin" overlays equal to or less than 45 mm (0.15') in thickness.
>
> The Contractor is to construct all AC sidewalks, access ramps, and gutters in accordance with American Disability Act (ADA) Standards / California Code of Regulations (CCR) Title 24 – Accessibility Regulations and the latest edition of applicable City Standard Plans, The Contractor shall ensure that all newly constructed AV improvements comply with the ADA Standards / CCR Title 24 – Accessibility Regulations and the latest edition of applicable City Standard Plans for cross slope and slope percentage requirements. The Contractor shall measure access ramps, sidewalks, curb and gutter, etc. for compliance using a digital level also known as an electronic level or "smart level" of two feet (2') or less in length.
>
> Access ramps cross slope shall be checked for the entire ramp width from back of curb to top of landing. Sidewalk cross slope shall be checked for entire sidewalk width, as well as longitudinally.

Delete Item 3, "Crushed Slag," of Subsection 400-1.2, "Asphalt Concrete Aggregates," of the Standard Specifications. The use of slag aggregate for asphalt concrete is expressly prohibited.

Coarse aggregate shall consist of material of which at least seventy-five percent (75%) by weight shall be crushed particles in lieu of the requirements of Subsection 400-4.2.3, "Coarse Aggregate."

The individual test result requirements shall be as specified in Subsection 400-4.3, "Combined Aggregates" of the Standard Specifications:

Add to Subsection 302-5.1, "General," of the Standard Specifications, the following:

> The combined aggregate grading for asphalt concrete placed on miscellaneous areas shall conform to the gradation for the asphalt concrete placed on the traveled way, unless otherwise directed by the Engineer. The amount of asphalt binder used in the

asphalt concrete placed in dikes, gutters, gutter flares, oversize drains and aprons at the ends of drainage structures, unless otherwise directed by the Engineer, shall be increased one per cent (1%) by weight of the aggregate over the amount of asphalt binder used in the asphalt concrete placed on the traveled way.

The asphalt concrete to be placed in areas which are designated on the Plans as miscellaneous areas may be spread in one layer. The material shall be compacted to the required lines, grades, and cross section.

Miscellaneous asphalt concrete replacement shall be constructed as shown on the Contract Plans. Miscellaneous replacement areas shall be a minimum of 75 mm (0.25 ft) thick, and shall be placed on subgrade which has been compacted to 95% relative compaction. Payment for construction of said areas shall be included in the unit price paid per tonne (ton) for asphalt concrete and shall include full compensation for furnishing all labor, materials, tools, equipment, and incidentals, and no additional compensation will be allowed therefore.

If the finished surface of the asphalt concrete on the traffic lanes does not meet the specified surface tolerances, it shall be brought within tolerances by either: (1) abrasive grinding (followed by fog seal coat on the areas which have been ground), (2) placing an overlay of asphalt concrete, or (3) removal and replacement. The method shall be selected by the Engineer.

Replace the second paragraph of Subsection 302-5.4, "Tack Coat," of the Standard Specifications, with the following:

A similar tack coat shall be applied to all surfaces that are to be overlaid unless otherwise directed by the Engineer.

Add to Subsection 302-5.5, "Distribution and Spreading," of the Standard Specifications, the following:

Tarpaulins shall be used to cover all loads when directed by the Engineer.

In advance of spreading asphalt concrete over asphalt concrete base course, or asphalt concrete surface, asphalt concrete leveling course shall be spread by any mechanical means that will produce a uniform smoothness and texture. Asphalt concrete leveling shall include, but is not limited to, the filling and leveling of irregularities and ruts. Asphalt concrete used to change the cross slope or profile of an existing surface shall not be considered as asphalt concrete leveling.

Unless otherwise permitted by the Engineer, the top layer of asphalt concrete for shoulders, tapers, transitions, road connections, private drives, curve widening, turnouts, left-turn pockets, and other such areas, shall not be spread before the top layer of asphalt concrete for the adjoining through lane has been spread and compacted. At locations where the number of lanes are changed, the top layer for the through lanes shall be paved first. Tracks or wheels of spreading equipment shall not be operated on the top layer of asphalt concrete in any area until final compaction has been completed or unless directed by the Engineer.

The top layer of asphalt concrete shall not exceed 60 mm (0.20 ft) in compacted thickness. Each lane of the top layer, once commenced, shall be placed without interruption.

All screed extensions for paving machines shall be provided with a tamper, roller, or other suitable compacting devices.

Asphalt pavers shall be equipped with automatic screed controls and a sensing device or devices. Automatic grade and slope control shall be used for overlays.

All joints shall be sealed after rolling.

When placing asphalt concrete to the lines and grades noted in the plans or as approved by the Engineer, the automatic screed controls shall control the longitudinal grade and transverse slope of the screed. Grade and slope references shall be furnished, installed, and maintained by the Contractor. The Contractor shall use a ski device. The minimum length of the ski device shall be 10 m (30 ft.). The ski device shall be a rigid one-piece unit and the entire length shall be utilized in activating the sensor. The Contractor may use a laser to control the screed.

When placing the initial mat of asphalt concrete on existing pavement, the end of the screed nearest the center line shall be controlled by a sensor activated by a ski device not less than 10 m (30 ft) long. The end of the screed farthest from center line shall be controlled by an automatic transverse slope device set to reproduce the cross slope approved by the Engineer.

When paving contiguously with previously placed mats, the end of the screed adjacent to the previously placed mat shall be controlled by a sensor that responds to the grade of the previously placed mat and will reproduce the grade in the new mat within a 3 mm (0.01 ft) tolerance. The end of the screed farthest from the previously placed mat shall be controlled in the same manner as when placing the initial mat.

Should the automatic screed controls fail to operate properly during any day's work, the Contractor may use manual control of the spreading equipment for the remainder of that day; however, the equipment shall be corrected or replaced with alternative automatically controlled equipment conforming to the requirements in this section before starting the next day's work.

Should the methods and equipment furnished by the Contractor fail to produce a layer of asphalt concrete conforming to the requirements, including straightedge tolerance, of Subsection 302-5.6.2, "Density and Smoothness," of the Standard Specifications, the paving operation shall be discontinued and the Contractor shall modify his equipment or furnish substitute equipment.

A drop-off of more than 45 mm (0.15 ft) will not be allowed at anytime between adjacent lanes open to public traffic.

The Contractor shall schedule his/her paving operations such that each layer of asphalt concrete is placed on all contiguous lanes of a traveled way each work shift. At the end of each work shift, the distance between the ends of the layers of asphalt concrete on adjacent lanes shall not be greater than 3 m (10 ft) nor less than 1.52 m (5 ft). Additional asphalt concrete shall be placed along the transverse edge at the end of each lane and along the exposed longitudinal

edges between adjacent lanes, hand raked, and compacted to form temporary conforms. Kraft paper, or other approved bond breaker, may be placed under the conform tapers to facilitate the removal of the taper when paving operations resume.

Add to Subsection 302-5.6.1, "General (Rolling)," of the Standard Specifications, the following:

> The Contractor shall furnish a sufficient number of rollers to obtain the specified compaction and surface finish required by the Standard Specifications and these Special Provisions.
>
> Pneumatic rollers shall be required on lower layer only.
>
> Initial breakdown compaction shall consist of a minimum of three (3) coverages of a layer of asphalt mixture. A pass shall be a movement of rolling in both directions over the same path. Coverage shall consist of as many passes as are necessary to cover the entire width being paved. Overlap between passes during coverage, made to ensure compaction without displacement of material in accordance with good rolling practice, shall be considered to be part of the coverage being made and not part of a subsequent coverage.
>
> Each coverage shall be completed before subsequent coverages are started.

Add to the first paragraph of Subsection 302-5.6.2, "Density and Smoothness," of the Standard Specifications, the following:

> The completed surfacing shall be thoroughly compacted, smooth, and free from ruts, humps, depressions, or irregularities. Any ridges, indentations or other objectionable marks left in the surface of the asphalt concrete shall be eliminated by rolling or other means. The use of any equipment that leaves humps, ridges, irregularities, indentations or other objectionable marks in the asphalt concrete shall be discontinued, and acceptable equipment shall be furnished by the Contractor.
>
> The transverse slope of the finished surface shall be uniform to a degree such that no depressions greater than 3 mm (0.01 ft) are present when tested with a straightedge 3 m (10 ft) long, laid in a direction transverse to the center line.
>
> If the test results for any lot of asphalt concrete indicate that the relative compaction is below 95.0 percent (95%), the Contractor will be advised that he is not attaining the required relative compaction and that his materials, procedures, or both, need adjustment. Asphalt concrete spreading operations shall not continue until the Contractor has notified the Engineer of the adjustment that will be made in order to meet the required compaction.

Add to Subsection 302-5.7, "Joints," of the Standard Specifications, the following:

> Before placing the top layer adjacent to cold transverse construction joints, the joints shall be trimmed to a vertical face and to a neat line. Longitudinal joints shall be trimmed to a vertical face and to a neat line if the edges of the previously laid surfacing are, in the opinion of the Engineer, in such condition that the quality of the completed

joint will be affected. Longitudinal and transverse joints shall be tested with a 3 m (10') straightedge and shall be cut back as required to conform to the provisions in Subsection 302-5.6.2, "Density and Smoothness," for surface smoothness. Connections to existing surfacing shall be feathered to conform to the provisions for smoothness.

Longitudinal joints in the top layer shall correspond with the edges of proposed traffic lanes (striping). Longitudinal joints in all other layers shall be offset not less than 150 mm (0.5 ft) alternately each side of the edges of traffic lanes.

All feathered joints shall be sealed after rolling.

Replace the third paragraph of Subsection 302-5.8, "Manholes," of the Standard Specifications, with the following:

Manholes, water valve and survey monument covers shall be adjusted to grade in accordance with the plans, and Subsection 301-1.6, "Adjustment of Manhole Frame and Cover Set to Grade," of the Standard Specifications.

After the pavement has been completed, the necessary portions of the sub-grade, base, and pavement shall be neatly removed, the structure built up, and the manhole frame set to be backfilled with Type III-C3-PG64-10 asphalt concrete. The asphalt concrete shall be placed and compacted in a workmanlike manner to conform to the appearance of the surrounding pavement, within two days of raising the manhole to grade.

All new and/or existing valve and survey monument covers shall be adjusted to grade during paving. When required, the Contractor shall install survey monument covers before paving. The Contractor shall furnish all slip sleeves or cans where none exist. The Contractor shall loosen and paint blue all water valve covers immediately after paving.

During asphalt concrete paving operations, it shall be the Contractors responsibility to place protective covering over, or to otherwise avoid paving over survey markers, monuments, and benchmarks, and to remove said covering and/or asphalt concrete after paving operations have been completed.

The contract unit price paid per ton (TN) for "Hot Mix Asphalt Concrete (AC)" shall include full compensation for furnishing all labor, materials, tools, equipment and incidentals, and for doing all the work involved in constructing asphalt concrete complete in place, and no additional compensation will be allowed therefore.

AGGREGATE BASE (BID ITEM NOS. 14, 102, AND 112)

Aggregate base shall conform to the requirements of Subsection 200-2.2, "Crushed Aggregate Base," or Subsection 200-2.4, "Crushed Miscellaneous Base," or Subsection 301-2, "Untreated Base" of the Standard Specifications and these Special Provisions.

Add to Subsection 200-2.4.1, "General" of the Standard Specifications the following:

> Disintegrated granite, glass, porcelain, brick, wood, steel (reinforcing, nails, etc.), or slag, shall not be used for aggregate base. If any detrimental material or deleterious substance is found, it shall be cause for rejection and be removed from the site.

Add to Subsection 200-2.4.2, "Grading" of the Standard Specifications the following:

> Grading or blending of the material shall be done through a screening process.

Add to Subsection 301-2.1, "General," of the Standard Specifications the following:

> Untreated base material shall be either crushed aggregate base as specified in Subsection 200-2.2, or crushed miscellaneous base as specified in Subsection 200-2.4.

Add to the second paragraph of Subsection 301-2.2, "Spreading" of the Standard Specifications, as follows:

> Tailgate spreading by dump truck will not be permitted except for spot dumping and in areas not readily accessible to spreading equipment.

The contract unit price paid per ton (TN) for "Aggregate Base" shall include full compensation for furnishing all labor, materials, tools, equipment and incidentals, and for doing all the work involved in constructing Aggregate Base concrete complete in place and no additional compensation will be allowed therefore.

PROFILOGRAPH ASPHALT CONCRETE PAVEMENT (BID ITEM NOS. 15, 103, AND 113)

Profiles of asphalt concrete pavement shall be performed using a California Profilograph or equivalent in conformance with the requirements in California Test 526 "Operation of California Profilograph and Evaluation of Profiles" and as specified in these Technical Provisions. Prior to beginning profiles, the profilograph shall be calibrated in the presence of the Engineer.

The Contractor, in the presence of the Engineer, shall profilograph the surface of the base paving or existing pavement surface.

The Contractor, in the presence of the Engineer, shall also profilograph the asphalt concrete overlay or the final pavement surface.

The pavement surface shall be profilographed throughout the length of each traveled lane, turn lane, parking lane or bicycle lane, ensuring that all paved areas are profilographed. Two profiles shall be obtained for each lane, as well as two profiles for the center continuous turn lane, and one profile in the parking lane. The profiles shall be approximately 1 m (3 ft) from and parallel with the edge of the lane.

All areas that require corrective work shall be marked out by the Contractor to the satisfaction of the Engineer. A profilograph shall be done in the presence of the Engineer for all corrective work.

Profilograph operations shall be in conformance with lane closure requirements.

The contract lump sum (LS) price paid for "Profilograph Asphalt Concrete Pavement" shall include full compensation for furnishing all labor, materials, tools, equipment, and incidentals, and for doing all the work involved in profilographing existing asphalt concrete, as specified in these Technical Provisions and as approved by the Engineer, and no additional compensation will be allowed therefor.

PORTLAND CEMENT CONCRETE FOR STREET IMPROVEMENTS (GENERAL)

Portland Cement Concrete (PCC) shall meet the requirements of Section 201, "Concrete, Mortar, and Related Materials," Subsection 302-6, "Portland Cement Concrete Pavement," and Section 303, "Concrete and Masonry Construction," of the Standard Specifications, and these Special Provisions:

Add to Subsection 201-1.1.1, "General", of the Standard Specifications, the following:

> The Contractor shall furnish the Engineer in the field with a copy of the mix design to be used, and with a legible certified weighmasters certificate for each load of PCC delivered to the project. PCC delivered to the project site having a water content and/or slump greater than that specified in the mix design shall be rejected and removed from the project site.

Revise the table in Subsection 201-1.1.2, "Concrete Specified by Class and Alternate Class," of the Standard Specifications as follows:

> Except as otherwise specified, all PCC used on this project shall be Class 560-C-3250 with a maximum slump of 4 in for all PCC and with the exact mix proportions being determined by the Contractor except for trench backfill slurry, air-placed Concrete-Method B, and as specified by the Engineer.

Replace the first sentence in Paragraph 6, Subsection 201-1.4.3, "Transit Mixers," of the Standard Specifications, with the followings:

> The total elapsed time between addition of water at the batch plant and the completion of the discharge of the PCC from the mixer shall not exceed ninety (90) minutes or before 250 revolutions of the drum, whichever occurs first. All PCC remaining in the mixer after said ninety (90) minutes time limit shall be rejected and removed from the project site. When the temperature of the PCC is 30° C (86° F) or greater or any conditions contributing to quick stiffening of the PCC, it shall be removed from the project site.

Replace the last paragraph, Subsection 303-5.1.1, "General," of the Standard Specifications, with the following:

> When removals of curb and/or sidewalk are located at curb return, the Contractor shall install access ramps with cast in place American Disability Act (ADA) Standards / California Code of Regulations (CCR) Title 24 – Accessibility

Regulations approved detectable warning panels (truncated domes) and per the latest edition of applicable City Standard Plans.

The Contractor is to construct all sidewalks, access ramps, and gutters in accordance with ADA Standards / CCR Title 24 – Accessibility Regulations and the latest edition of applicable City Standard Plans. The Contractor shall ensure that all newly constructed PCC improvements comply with ADA Standards / CCR Title 24 – Accessibility Regulations and the latest edition of applicable City Standard Plans for cross slope and slope percentage requirements. The Contractor shall measure access ramps, sidewalks, curb and gutter, etc. for compliance using a digital level, also known as an electronic level or "smart level" of two feet (2') or less in length.

Access ramp cross slope shall be checked for the entire ramp width from back of curb to top of landing. Sidewalk cross slope shall be checked for entire sidewalk width, as well as longitudinally.

If the sidewalks, access ramps, and gutters constructed by the Contractor are found to be in non-compliance with ADA Standards / CCR Title 24 – Accessibility Regulations, the Contractor will be required to remove and replace the sidewalks, access ramps, and gutters to ADA Standards / CCR Title 24 – Accessibility Regulations at the Contractor's expense.

All removed curb and gutter, cross gutters, spandrels, driveway approaches, and sidewalks shall be replaced within three (3) calendar days, unless the Contractor provides reasonable documentation to exceed the three (3) day limit five (5) working days before removal and approved in writing by the Engineer. The Asphalt Concrete patch shall be placed within five (5) working days after the curb and gutters are replaced, and seven (7) days after the cross gutter and spandrels are replaced.

No PCC shall be ordered and/or placed until the forms and subgrade have been inspected and approved by the Engineer in the field.

All traffic signal pull boxes, water meter boxes, water valve covers, street light boxes, and other utility boxes shall be adjusted to proposed finish grade and approved by the Engineer in the field prior to placement of the PCC.

Integral color PCC placed for sidewalk construction shall be continuous pours from the same daily batch. No cold joint between daily pours of PCC will be allowed.

Add to the first paragraph of Subsection 303-5.1.2, "Drainage Outlets Through Curb," of the Standard Specifications, the following:

Coring shall be required for all drains through existing curbs.

Replace the last paragraph of Subsection 303-5.1.3, "Driveway Entrances," of the Standard Specifications, with the following:

> Driveway approaches including walk shall be 6 in thick for single family residential areas and 8 in thick with a minimum of 6 in thick aggregate base.

Add to Subsection 303-5.3, "Placing Concrete," of the Standard Specifications, the following:

> All temporary storage of PCC liquid residues and mixer wash out on the project site shall be deposited within a self containment area or bin. The Contractor may elect to allow the moisture to evaporate and dispose of the material as a solid or dispose of the material as a liquid. The Contractor shall notify the engineer in writing, as a preconstruction meeting submittal, what method of disposal will be utilized.
>
> If disposal of the material in liquid form is chosen, the Contractor must provide in writing, as part of the preconstruction meeting submittal, the name, location, telephone number, and a copy of the California Regional Water Quality Control Board (RWQCB) permit for disposal of PCC liquid residue, or if the disposal site is located outside of the State of California, a copy of a permit issued by that state is required. The engineer will verify the information before the Notice to Proceed is issued.
>
> All PCC and related work, including grading and forming, shall be suspended if the Contractor does not have a PCC liquid residue or mixer wash out containment area or bin on site one (1) working day before the scheduled placement of PCC. The Contractor will not be allowed any additional compensation or extension of time for suspended operations due to not having a containment area or bin on site. The containment area or bin shall have sufficient room for two (2) days deposit of material.
>
> The Contractor shall provide the engineer with a copy of the landfill receipts or disposal site receipt and weight ticket showing disposal of PCC liquid residues and wash out within five working days of disposal.

Add to Subsection 303-5.4.3, "Weakened Plane Joints, (a) General," of the Standard Specifications, the following:

> All weakened plane joints shall be spaced at a maximum of 10 ft for curbs, gutters, and sidewalks. Scoring lines shall conform to those prevailing in the area and be uniform in spacing.

Revise Subsection 303-5.5.2, "Curb," of the Standard Specifications, as follows:

> Delete the first sentence in Paragraph 1 and add the following:
>
> The curb and gutter surface shall not vary more than 0.01 ft from 10 ft straightedge except at the grade changes. Prior to the removal of the forms, the

surface shall be finished true to grade by means of a straightedge float of not less than 10 ft in length, and operated longitudinally over the surface of the concrete. Form clamps shall be so constructed as not to interfere with the operation of the float. The form on the front of the curbs shall not be removed less than one (1) hour, or more than six (6) hours after the concrete has been placed. In no event shall forms be removed while the concrete is sufficiently plastic to slump. The top and face of the finished curb shall be true and straight and top surface of curbs shall be of uniform width, free from humps, sags, blemishes, or other irregularities.

Add to Subsection 303-5.5.2, "Curb" of the Standard Specifications, the following:

Two component construction grade structural epoxy adhesive shall be used to bond fresh PCC curb to existing asphalt concrete or PCC.

All surfaces to be bonded must be free of standing water, moisture, completely clean of dirt, curing compounds, grease, oil, paint, and unsound materials, which would prevent a solid bond. Smooth surfaces shall be sand blasted or mechanically abraded. All dust shall be vacuumed or swept.

Epoxy components shall be stored at 65° F - 85° F (18° C - 29° C) for 24 hours prior to use. The mixed epoxy shall be uniform in color, not show streaks, and not have air entrapment. The Contractor shall mix only the amount of epoxy that can be applied within the product's pot life. Pot life will decrease as the ambient temperature and/or mass size increases.

Add to Subsection 303-5.5.3, "Walk," of the Standard Specifications, the following:

The sidewalk surface shall not exceed two percent (2%) cross fall and not vary more than 0.01 ft from the 10 ft straightedge except at grade changes, and the finished surface shall be free from humps, sags, blemishes or other irregularities. All sidewalks shall be a minimum of 4 in thick, except at driveways where the sidewalks shall be a minimum of 6 in. thick for single family residential areas and 8 in thick for all other areas and 6 in thick for curb return landings including access ramps.

Add to Subsection 303-5.5.4, "Gutter," of the Standard Specifications, the following:

A Water Test shall be performed for all new gutter/spandrels and at joins with existing gutter/spandrels to ensure positive flow. The test shall be performed in the presence of a City representative and within 48 hours of the gutter/spandrels being placed. Any sections of gutter/spandrel that do not exhibit positive flow (i.e. ponding, spillover onto AC Pavement, etc.) shall be removed and replaced by the Contractor prior to paving at no cost to the City, and no additional time shall be allowed.

Add to Subsection 303-5.6, "Curing," of the Standard Specifications, the following:

> Curing compound shall be translucent with white pigmented fugitive dye, Type 2, in accordance with Section 201-4, "Concrete Curing Compound," of the Standard Specifications.

Add to Subsection 303-5.7, "Repairs and Replacements," of the Standard Specifications, the following:

> In order to minimize vandalism damage to the finished PCC surfaces, the Contractor shall plan his work so that no PCC is poured after 1:00 p.m., unless otherwise authorized by the Engineer in the field.
>
> The Contractor shall barricade and protect placed Portland Cement Concrete from all damages, marks, mars, and/or graffiti. Any Portland Cement Concrete damaged, defaced, discolored, or defective shall be replaced to the satisfaction of the Engineer at the Contractor's expense, and no additional time will be allowed.
>
> Grading, patching, or other remedies to correct the situation will not be accepted unless in the opinion of the Engineer the vandalized area is so small that it does not warrant replacement. Concrete replacement areas shall be from score mark or control joint to score mark or control joint, and full width of the sidewalk. All replacement areas shall be saw cut.

Add to Subsection 303-5.8, "Backfilling and Cleanup," of the Standard Specifications, the following:

> A minimum of 12 in wide full depth asphalt concrete pavement repair patch is required when cross gutter, spandrel, driveways, curb, and gutter are placed adjacent to existing asphalt concrete pavement. The asphalt concrete pavement repair patch shall be placed within two (2) working days after the cross gutters, spandrels, driveways, curb and gutter are replaced. The asphalt concrete pavement shall be saw cut.

Add to Subsection 303-5.9, "Measurement and Payment," of the Standard Specifications, the following:

> Concrete curb and gutter, and transitions for local depressions, shall be measured by the foot for the length in place including curb depressions and excluding commercial driveway curbs and gutter sections. "Median Nots" (center turn lane pavement), cross walk pavement, and intersection pavement shall be measured by the square foot from edge to edge and end to end. Commercial driveways shall be measured by the square foot from beginning of curb return to end of curb return from lip of gutter to the exterior edge of the driveway within the limits of the back of curb lines. Residential driveways shall be measured by the square foot measured from the back of curb or curb and gutter to the exterior edge of the driveway and from the beginning of the driveway depression (top of

"X") to the end of the driveway depression (top "X"). Sidewalks shall be measured by the square foot, from edge to edge of back of curb, and end to end and shall include replacement and adjustment of No. 6 traffic signal pullbox. Curb return landings shall be measured by the square foot, from Beginning of Curb Return (BCR) to End of Curb Return (ECR) and from edge of gutter to back of sidewalk or back of retaining curb (included), and shall include replacement of No. 6 traffic signal pullbox. Access ramps including detectable warning panels shall be included in the sidewalk/curb return landings measurement unless separately specified then shall be measured by the square foot from exterior score lines to the back of curb. Surface grooves, horizontal sawcutting, and textures of pattern in the concrete shall not be separately measured or paid for. Local Depressions for catch basins shall be measured by the square foot. Median hardscape and cross gutters shall be paid by square foot from edge to edge and end to end. Spandrels integral with the curb shall be measured by the square meter (foot) from the back of curb to edges and end to end. Dowel bars shall not be separately measured or paid for. Bus turnouts shall be measured by the square meter (foot) from beginning of transition to end of transition and from lip to gutter to back of curb. All measurements are to be on a horizontal plane.

The contract unit price paid for parkway culvert shall include full compensation for all labor, tools, materials, equipment, and incidentals including, but not limited to, form work, finishing, reinforcing steel, earthwork (excavation and backfill), AC pavement patching, disposal of PCC liquid residues and mixer wash out and for doing all the work involved for the construction of parkway culvert. No separate or additional compensation shall be allowed therefor.

The contract unit price paid for Adjust Manhole Frame and Cover to Grade, Water Valve Cover to Grade, Miscellaneous Utility Covers/Boxes to Grade and Water Meter Boxes to Grade shall include full compensation for all labor, tools, materials, equipment, and incidentals required to adjust water meter boxes to the proposed finish surface and no separate or additional compensation shall be allowed therefor.

The contract unit price paid for the various items of PCC work shall include full compensation for all labor, tools, materials, equipment, and incidentals including, but not limited to, formwork, finishing, aggregate base under commercial driveways, cast in place and adhesive ADA / CCR Title 24 – Accessibility Regulations approved installed detectable warning panels, reinforcing steel, earthwork (excavation and backfill), Temporary AC, AC pavement patching, disposal of PCC liquid residues and mixer wash out, and for doing all the work involved for the placement of the various items of PCC. No separate or additional compensation shall be allowed therefor.

Payment for the detectable warning surface (truncated domes) placed in the pedestrian crossing on Robin Lane and the driveway located at 11790 Perris Boulevard shall be included in the work for various associated PCC items and no additional compensation shall be made therefore.

Payment for PCC shall be made as specified in the bid schedule for various PCC concrete items. Payment for the various PCC concrete items that fail to meet the cross slope and slope requirements will be withheld until compliance is met. Payment for asphalt concrete pavement repair patch shall be considered included in the bid cost for the various associated PCC items.

CONSTRUCT CURB (BID ITEM NOS. 16 AND 17)

Construction of new curb shall conform to the City Curb Standard Drawing Numbers 202 and 203. Portland Cement Concrete of type 560-C-3250 (6 Sack) shall be used for construction. Type 6A and Type 8A shall be constructed to the dimensions as specified in the City's Standard Plans and application details and other specifications not explicitly shown or stated in the City's Standard Plan, shall conform to Section 303-5 of the Standard Specifications.

The contract unit price per linear foot (LF) for "Construct Type 6A Curb" and "Construct Type 8A Curb" shall include full compensation for furnishing all labor, materials, tools, and incidentals, and for doing all the work involved, and no additional compensation will be allowed therefore.

CONSTRUCT PCC RETAINING CURB (BID ITEM NO. 18)

Construction of new retaining curb shall conform to the details as shown on the plans and conform to Section 303-5 of the Standard Specifications. Portland Cement Concrete of type 560-C-3250 (6 Sack) shall be used for construction.

The contract unit price per linear foot (LF) for "Construct PCC Retaining Curb" shall include full compensation for furnishing all labor, materials, tools, and incidentals, and for doing all the work involved, and no additional compensation will be allowed therefore.

CONSTRUCT INTEGRAL CURB AND GUTTER (BID ITEMS NOS. 19 AND 20)

Construction of new curb and gutter shall conform to the City Curb and Gutter Standard Plan Numbers 200 and 201. Portland Cement Concrete of type 560-C-3250 (6 Sack) shall be used for construction. Type 6 Curb and Gutter and Type 8 shall be constructed to the dimensions as specified in the City's Standard Plans but, application details and other specifications not explicitly shown or stated in the City's Standard Plan, shall conform to Section 303-5 of the Standard Specifications.

The contract unit price paid per linear foot (LF) for "Construct Type 6 Integral Curb and Gutter " and "Construct Type 8 Integral Curb and Gutter" shall include full compensation for furnishing all labor, materials, tools, and incidentals, and for doing all the work involved, and no additional compensation will be allowed therefore.

CONSTRUCT PCC SIDEWALK (BID ITEM NO. 21)

Construction of sidewalk shall conform to the City's Standard Plan Numbers 210, 211 and 213 and Construction Plans which provide sidewalk thickness requirements, and special notes for construction. Sidewalk material shall be Portland Cement Concrete of type 560-C-3250 (6 Sack). The Construction Plans indicate where sidewalk is to be installed. Application details and other specifications not explicitly stated or shown in either Standard Plans, or the Construction Plans shall conform to Section 303-5 and Section 303-7 of the Standard

Specifications. Colored concrete shall be Method B (Integral Color) and shall conform to Section 303-7.3.

The contract unit price paid per square foot (SF) for "Construct PCC Sidewalk" shall include full compensation for furnishing all labor, materials, tools, and incidentals, and for doing all the work involved and no additional compensation will be allowed therefore.

CONSTRUCT MEDIAN HARDSCAPE (BID ITEM NO. 118)

Construction of median hardscape shall conform to Section 303-5 and 303-6 of the Standard Specifications and conform to City Standard Plan Numbers 112A and 112B. Stamped concrete shall be 4" thick Class 560-C-3250 and constructed at locations shown on the Plans. Colored concrete shall be Method B (Integral Color) and shall conform to Section 303-7.3.

The contract unit price paid per square foot (SF) for "Construct Median Hardscape" shall include full compensation for furnishing all labor, materials, tools, equipment, and incidentals, and for doing all the work involved, and no additional compensation will be allowed therefore.

CONSTRUCT PCC LANDING AND ACCESS RAMP (BID ITEM NOS. 22, 23, 24, AND 25)

Construction of access ramps shall conform to the City Curb Ramp Detail Standard Drawing Numbers 214A, 214B, and 214C. The ramp detail conforms to ADA standards as called for in the Plans. The details specified in this Standard Plan shall govern, but the Construction Plans shall be referred to for application location details. ADA standards shall be referred to for other specifications not explicitly stated or shown on the City Standard Plan. Also, construction material and application details shall conform to Section 303-5 of the Standard Specifications.

Payment for the detectable warning surface (truncated domes) placed in the pedestrian crossing on Robin Lane shall be included in the work for various associated PCC items and no additional compensation shall be made therefore.

At intersection of Perris Boulevard and Ironwood Avenue (four locations), Contractor shall remove existing concrete between BCR and ECR and from back of sidewalk to sawcut in street at 12" from and parallel to edge of gutter. Pavement cutting shall be neatly sawcut. Contractor shall replace the access ramps per City Standard Plan Numbers 214A, 214B and 214C. Contractor shall protect in place all signal poles and boxes.

At intersection of Perris Boulevard and Manzanita Avenue (two locations), Contractor shall remove existing concrete between BCR and ECR and from back of sidewalk to sawcut in street at 12" from and parallel to edge of gutter. Pavement cutting shall be neatly sawcut. Contractor shall replace the access ramps per City Standard Plan Numbers 214A, 214B and 214C. Contractor shall protect in place all signal poles and boxes. Contractor shall verify that the 5 percent maximum crossfalls in the 4' x 4' bottom landing area as indicated in City Standard Plans is satisfied.

Multiple access ramps, as shown on the plans, within the same curb return location shall be considered as one payment quantity and no additional compensation shall be made for additional access ramps within said curb return.

Contractor shall verify that the 5 percent maximum crossfall in the 4' x 4' bottom landing area as indicated on the City Standard Plans is satisfied. If additional removals and asphalt pavement is required to satisfy the landing requirements, additional work and materials required shall be considered as included in the contract unit price paid and no additional compensation shall be made.

The contract unit price paid per each (EA) for "Construct PCC Landing and Access Ramp (Type I)", "Construct PCC Landing and Access Ramp (Type II)", "Remove and Reconstruct PCC Landing and Access Ramp (Type I)" and "Remove and Reconstruct PCC Landing and Access Ramp (Type II)" shall include full compensation for furnishing all labor, materials, tools, and incidentals, including truncated domes, retaining curbs, removals of existing access ramps and curb and gutter and for doing all the work involved, and no additional compensation will be allowed therefore.

CONSTRUCT 4" PCC DRIVEWAY (BID ITEM NO. 26)

Construction of PCC driveways shall conform to Section 303-5 of the Standard Specifications and shall be 4" thick Class 560-C-3250 over native soils compacted to a minimum of 95 percent relative compaction and constructed at locations shown on the Plans.

The contract unit price paid per square foot (SF) for "Construct 4" PCC Driveway" shall include full compensation for furnishing all labor, materials including redwood headers and stakes, tools, equipment, and incidentals, and for doing all the work involved, and no additional compensation will be allowed.

CONSTRUCT 6" PCC DRIVEWAY (BID ITEM NO. 27)

Construction of PCC driveways shall conform to Section 303-5 of the Standard Specifications and shall be 6" thick Class 560-C-3250 over native soils compacted to a minimum of 95 percent relative compaction and constructed at locations shown on the Plans.

The contract unit price paid per square foot (SF) for "Construct 6" PCC Driveway" shall include full compensation for furnishing all labor, materials including redwood headers and stakes, tools, equipment, and incidentals, and for doing all the work involved, and no additional compensation will be allowed.

CONSTRUCT 4" AC DRIVEWAY (BID ITEM NO. 28)

Driveway approaches shall be 4" thick Type III-C3-PG64-10 and constructed at locations shown on the Plans. Asphalt driveway edges shall be supported by 2X4 redwood headers with 2X4 Redwood Stakes placed 4 ft-0 in O.C. with a taper head.

The contract unit price paid per square foot (SF) for "Construct 4" AC Driveway" shall include full compensation for furnishing all labor, materials **including redwood headers and stakes**, tools, equipment, and incidentals, and for doing all the work involved in constructing asphalt concrete driveways, and no additional compensation will be allowed. No separate payment will be made for the asphalt concrete used in constructing asphalt concrete driveways.

CONSTRUCT PCC RESIDENTIAL DRIVE APPROACH (BID ITEM NO. 29)

Construction of driveway approaches shall conform to Section 303-5 of the Standard Specifications and conform to City Driveway Standard Plan Numbers 117A, 117B, and 117C. Driveway approaches shall be 6" thick Class 560-C-3250 over native soils compacted to a minimum of 90 percent relative compaction.

The contract unit price paid per square foot (SF) for "Construct PCC Residential Drive Approach" shall include full compensation for furnishing all labor, materials including redwood headers and stakes, tools, equipment, and incidentals, and for doing all the work involved, and no additional compensation will be allowed.

CONSTRUCT PCC COMMERCIAL DRIVE APPROACH (BID ITEM NO. 30)

Construction of driveway approaches shall conform to Section 303-5 of the Standard Specifications and conform to City Driveway Standard Plan Numbers 118A, 118C, and 118D. Driveway approaches shall be 8" thick Class 560-C-3250 over 6" thick aggregate base and constructed at locations shown on the Plans.

The contract unit price paid per square foot (SF) for "Construct PCC Commercial Drive Approach" shall include full compensation for furnishing all labor, materials including redwood headers and stakes, tools, equipment, and incidentals, and for doing all the work involved, and no additional compensation will be allowed.

CONSTRUCT PCC CROSS GUTTER AND SPANDRAL (BID ITEM NO. 31)

Construction of cross gutters and spandrels shall conform to Section 303-5 of the Standard Specifications and conform to City Standard Plan Number 209. Cross gutters and spandrels shall be 8" thick Class 560-C-3250 over 6" thick aggregate base and constructed at locations shown on the Plans.

The contract unit price paid per square foot (SF) for "Construct PCC Cross Gutter and Spandrel" shall include full compensation for furnishing all labor, materials including redwood headers and stakes, reinforcement, tools, equipment, and incidentals, and for doing all the work involved, and no additional compensation will be allowed.

CONSTRUCT PCC STEPS (BID ITEM NO. 32)

Construction of PCC Steps shall conform to Standard Plans for Public Works Construction (SPPWC) drawing number 640-3 and shall conform to Section 303-1 of the Standard Specifications. PCC Steps shall be Class 560-C-3250 over native soils compacted to a minimum of 95 percent relative compaction and constructed at locations shown on the Plans.

The contract unit price paid per cubic yard (CY) for "Construct PCC Steps" shall include full compensation for all labor, tools, materials, equipment, and incidentals including, but not limited to, form work, finishing, reinforcing steel, earthwork (excavation and backfill), AC pavement patching, disposal of PCC liquid residues and mixer wash out and for doing all the work involved for the construction of concrete steps. No separate or additional compensation shall be allowed therefore.

CONSTRUCT PCC LONGITUDINAL GUTTER (BID ITEM NO. 33)

Construction of longitudinal gutters shall conform to Standard Plans for Public Works Construction (SPPWC) drawing number 122-2 and shall conform to Section 303-5 of the Standard Specifications. Longitudinal gutters shall be 8" thick Class 560-C-3250 over native soils compacted to a minimum of 95 percent relative compaction and constructed at locations shown on the Plans.

The contract unit price paid per linear foot (LF) for "Construct PCC Longitudinal Gutter" shall include full compensation for all labor, tools, materials, equipment, and incidentals including, but not limited to, form work, finishing, reinforcing steel, earthwork (excavation and backfill), AC pavement patching, disposal of PCC liquid residues and mixer wash out and for doing all the work involved for the construction of longitudinal gutter. No separate or additional compensation shall be allowed therefore.

CONSTRUCT PARKWAY CULVERT (BID ITEM NO. 34)

Construction of parkway culverts shall conform to City Standard Plan Number 300 and shall conform to Section 303-5 of the Standard Specifications. Parkway culverts shall be Class 560-C-3250 over native soils compacted to a minimum of 95 percent relative compaction and constructed at locations shown on the Plans.

The contract unit price paid per each (EA) for "Construct Parkway Culvert" shall include full compensation for all labor, tools, materials, equipment, and incidentals including, but not limited to, form work, finishing, face angle, reinforcing steel, earthwork (excavation and backfill), AC pavement patching, disposal of PCC liquid residues and mixer wash out and for doing all the work involved for the construction of parkway culvert. No separate or additional compensation shall be allowed therefore.

CONSTRUCT RESIDENTIAL CURB DRAIN (BID ITEM NO. 35)

Construction of residential curb drains shall conform to City Standard Drawing Number 303 and shall conform to Section 303-5 of the Standard Specifications.

The contract unit price paid per linear foot (LF) for "Construct Residential Curb Drain "shall include full compensation for all labor, tools, materials, equipment, and incidentals including, but not limited to, form work, finishing, reinforcing steel, pipe, fittings, earthwork (excavation and backfill), AC or PCC pavement patching, disposal of PCC liquid residues and mixer wash out and for doing all the work involved for the construction of residential curb drain. No separate or additional compensation shall be allowed therefore.

CONSTRUCT YARD INLET (BID ITEM NO. 36)

Construction of yard inlets shall conform to Standard Plans for Public Works Construction (SPPWC) drawing number 350-2 and shall conform to Section 303-5 of the Standard Specifications.

The contract unit price paid per each (EA) for "Construct Yard Inlet "shall include full compensation for all labor, tools, materials, equipment, and incidentals including, but not limited to, form work, finishing, reinforcing steel, grates, hardware, fittings, outlet pipe, earthwork (excavation and backfill), AC or PCC pavement patching, disposal of PCC liquid residues and mixer wash out and for doing all the work involved for the construction of yard inlet. No separate or additional compensation shall be allowed therefore.

CONSTRUCT RETAINING WALL (BID ITEM NOs. 37, 38, AND 39)

Construction of retaining walls shall conform to the detail shown on SPPWC Standard Plan 610-3, SPPWC Standard Plan 615-4 and SPPWC Standard Plan 618-3, Type B as shown on the Plans. Also, construction material and application details shall conform to Sections 303-1 and 201-2 of the Standard Specifications.

Height adjustments to the Retaining Walls as shown in the plans are to be expected based on the actual finish surfaces to be matched on either side of the wall.

The retaining walls at 11856 Perris Boulevard shall match the existing house stucco color and texture in like-kind. The new retaining wall shall have a top of wall grade that is consistent (as opposed to stepped) and have a rounded top to match existing retaining wall.

The retaining walls at 11480 Perris Boulevard shall match color and finish of the existing retaining wall located on the north property line in like-kind.

The back of retaining wall at 24940 Robin Lane visible from the residence shall match the existing house stucco color and texture in like-kind. The new retaining wall shall have a top of wall elevation that is 6 inches above the adjacent sidewalk finished surface.

The contract unit price paid per square foot (SF) for "Construct Type 1 Retaining Wall per SPPWC 610-3", "Construct Type 6 Retaining Wall per SPPWC 615-4" and "Construct Masonry Retaining Wall per SPPWC 618-3" shall be paid per square foot (SF) of vertical surface above footing and shall include full compensation for furnishing all labor, equipment, materials, shoring and tools required for performing all work necessary to excavate, backfill, grade, shore, form, place required steel reinforcement, cure, finish texture and color, complete in place, and no separate or additional compensation will be allowed therefore.

CONSTRUCT MASONRY SLOUGH WALL PER SPPWC 622-3 (BID ITEM NO. 40)

Construction of slough walls shall conform to the detail shown on SPPWC Standard Plan 622-3 as shown on the Plans. Also, construction material and application details shall conform to Sections 303-1 and 201-2 of the Standard Specifications.

The contract unit price paid per linear foot (LF) for "Construct Masonry Slough Wall per SPPWC 622-3" shall include full compensation for furnishing all labor, equipment, materials and tools required for performing all work necessary to excavate, backfill, grade, form, cure, finish texture and color, complete in place, and no separate or additional compensation will be allowed therefore.

CONSTRUCT 6" AC DIKE (BID ITEM NO. 41)

Construction of asphalt berms, curbs, and dikes shall conform to City Standard Plan Number 207 and shall conform to Section 302 of the Standard Specifications.

Berms shall be shaped and compacted with an extrusion machine or other equipment capable of shaping and compacting the material to the required cross section.

In advance of placing berms on asphalt concrete pavement, the pavement surface shall be broom cleaned of all loose material and a tack coat shall be applied. The tack coat shall be in accordance with Section 302-5.4, "Tack Coat" of the Standard Specifications.

The contract unit price paid per linear foot (LF) of "Construct 6" AC Dike" shall include full compensation for furnishing all labor, materials, tools, equipment, and incidentals, and for doing all the work involved in constructing asphalt concrete berms, and no additional compensation will be allowed. No separate payment will be made for the Asphalt Concrete used in constructing asphalt concrete berms.

FENCE, WALL, AND GATE RELOCATION OR INSTALLATION (GENERAL)

This work is to include all fencing materials (existing, new, or temporary).

All fencing, wall, and gates are to be replaced with new material unless approved by the engineer. The fence height and post spacing shall match the height and post spacing of the existing fence with a maximum post spacing of ten (10) feet except for wood posts which shall have a maximum spacing of eight (8) feet, unless otherwise shown on the plans.

Removal of all fencing shall be included in the bid item for "Clearing and Grubbing".

The Contractor shall prevent any domestic animals or livestock from straying beyond the portion of fence to be removed or relocated; this action may require a temporary fence.

The Contractor shall be liable for the capture or replacement of all domestic animals or livestock that stray through that portion of fence the Contractor removes.

Temporary relocation or alteration of fences requested by the Contractor for convenience of construction or for safety barriers, other than the portion shown on the Plans for removal and replacement, shall be approved by the Engineer, and all costs associated with said work shall be considered as included in the various bid items associated with the work and no additional compensation shall be made.

The Contractor shall place a temporary fence around all open excavations, which includes exposed structures and trenches. The Contractor shall restrict access to the swimming pool by installing a temporary fence in accordance with the City's Requirements for Pool Fencing and shall be installed before the existing fence is removed.

The cost of new and temporary fence, wall, and gate shall be included in the bid items contract unit price paid for linear foot of each item. The cost shall include full compensation for

furnishing all labor materials, tools, and equipment, and doing all the work involved in alteration or reconstructing the fence, wall, and gates complete in place as shown on the Plans and per the Specifications, and no additional compensation will be allowed.

FURNISH AND INSTALL CHAIN LINK FENCE (BID ITEM NOS. 42, AND 43)

Chain link fence shall conform to Section 206-6 of the Standard Specifications, these Technical Provisions and as approved by the Engineer.

"Furnish and Install Chain Link Fence per City Std. Plan No. 604A" shall conform to City of Moreno Valley Standard Drawing number 604A and details provided in the plans. Fence heights shall be 6 feet unless otherwise indicated on the plans.

"Furnish and Install Chain Link Fence per SPPWC 621-2" shall conform to Standard Plans for Public Works Construction (SPPWC) drawing number 621-2 and details provided in the plans. Fence heights shall be 6 feet unless otherwise indicated on the plans.

The contract unit price paid per linear foot (LF) for "Furnish and Install Chain Link Fence per City Standard Plan No. 604A" and "Furnish and Install Chain Link Fence per SPPWC 621-2" shall include full compensation for furnishing all labor, materials including hardware, post footings, tools, equipment, and incidentals, and for doing all the work involved, and no additional compensation shall be made therefore.

FURNISH AND INSTALL CHAIN LINK FENCE GATE (BID ITEM NOS. 44, 45, AND 46)

Chain link fence gates construction materials and application details shall conform to Section 206-6 of the Standard Specifications, these Technical Provisions and as approved by the Engineer.

Drive Gates and Walk Gates shall conform to City of Moreno Valley Standard Plan Number 604B and 604C. Gate widths are shown in plans and gate heights should match adjacent chain link fencing.

Sliding Gates shall be free sliding, gate widths are shown in plans and gate heights should match adjacent chain link fencing.

The contract unit price paid per each (EA) for "Furnish and Install Chain Link Fence Drive Gate", "Furnish and Install Chain Link Fence Sliding Gate" and "Furnish and Install Chain Link Fence Walk Gate" shall include full compensation for furnishing all labor, materials, including hardware, gates, wheels, tracks, post footings, tools, equipment, and incidentals, and for doing all the work involved, and no additional compensation shall be made therefore.

RECONSTRUCT PILASTER (BID ITEM NOS. 47 AND 48)

New pilasters shall match existing pilasters in like-kind, including material, color, dimensions, texture and shall conform to Section 202 of the Standard Specifications, these Special Provisions and as approved by the Engineer.

Adjustment of existing wrought iron fencing to rebuilt pilasters shall be included in the price paid for rebuilding pilasters.

The contract unit price paid per each (EA) for "Reconstruct Pilaster (11730 Perris Blvd)" and "Reconstruct Pilaster (11725 Perris Blvd)" shall include full compensation for furnishing all labor, materials including rock or brick, footings, adjusting existing wrought iron fencing, hardware, tools, equipment, and incidentals, and for doing all the work involved, and no additional compensation shall be made therefore.

CONSTRUCT WOOD FENCE (BID ITEM NO. 49)

New Wood Fence shall match existing fence in like-kind and shall conform to Sections 204 and 206-6 of the Standard Specifications, these Special Provisions and as approved by the Engineer.

The contract unit price paid per linear foot (LF) for "Construct Wood Fence" shall include full compensation for furnishing all labor, materials including panels, posts, hardware, post footings, tools, equipment, and incidentals, and for doing all the work involved, and no additional compensation shall be made therefore.

FURNISH AND INSTALL WHITE VINYL FENCE (BID ITEM NO. 50)

New White Vinyl Fence shall match existing fence in like-kind and shall conform to Sections 210-5 of the Standard Specifications, these Special Provisions and as approved by the Engineer.

New White Vinyl Fence shall be 6 feet in height.

The contract unit price paid per linear foot (LF) for "Furnish and Install White Vinyl Fence" shall include full compensation for furnishing all labor, materials including panels, posts, hardware, post footings, tools, equipment, and incidentals, and for doing all the work involved, and no additional compensation shall be made therefore.

ROLLED EROSION CONTROL PRODUCT (NETTING) (BID ITEM NO. 51)

GENERAL

Summary

This work includes installing rolled erosion control product (netting).

Definitions

Rolled erosion control product (RECP): A long-term degradable material manufactured or fabricated into rolls designed to reduce soil erosion and assist in the growth, establishment, and protection of vegetation.

Open weave textile (OWT): A degradable RECP composed of processed natural yarns woven into a matrix, used to provide erosion control and vegetation establishment.

Submittals

Submit a Certificate of Compliance under Section 6-1.07, "Certificates of Compliance" of the Standard Specifications for:

1. Netting
2. Fastener

MATERIALS

Netting

Netting must comply with the following:

1. Netting must be an OWT RECP.
2. Netting Type: B.
3. Machine-made mats provided in rolled strips.
4. Minimum thickness: 0.30 inch.
5. Minimum width: 72 inches.
6. U.V. Stability under ASTM D 4355 (500 hours exposure): 80%
7. Physical properties in Table A:

Table A

Type	Number Of Nets	Net Type	Matrix	Maximum "C" Factor [1]	Minimum Sheer Stress [2]	Functional Longevity (months)	Minimum Tensile Strength [3]
B[5]	Single Net	Organic	100% Woven Coir (Coconut Fiber)	0.25	4.4	36	125

Notes:

[1] Universal Soil Loss Equation (USLE) C-Factor for a 1.5:1 (H:V) unvegetated slope.
[2] lb/ft2 under ASTM D 6460.
[3] lb/ft under ASTM D 5035.
[5] Average open area of 48%, with a tolerance of ± two percent. Minimum weight of 20 ounces per square yard under ASTM D 3776.

Fasteners

Fasteners must be 11 gauge, 6-inch U-shaped staples with 6-inch legs, and 1-inch crown.

Fasteners must be installed per City Standard 541, manufacturer's recommendation and per Engineer's direction.

MEASUREMENT AND PAYMENT

The quantity of rolled erosion control product (netting) will be measured by the square foot as determined from actual slope measurements of the areas covered by the rolled erosion control product (netting) excluding overlaps.

The contract price paid per square foot (SF) for "Rolled Erosion Control Product (Netting)" includes full compensation for furnishing all labor, materials, tools, equipment, and incidentals, and for doing all the work involved in rolled erosion control product (netting), complete in place, including fasteners, as shown on the plans, as specified in the Standard Specifications and these special provisions, and as directed by the Engineer.

EROSION CONTROL HYDROSEED (TYPE B) (BID ITEM NO. 52)

GENERAL

DESCRIPTION

This work shall consist of performing erosion control and other work necessary for improving the appearance of the roadside and preserving and rehabilitating the roadside investment.

Erosion control and roadside planting shall be performed in conformance with these specifications, the technical provisions, the details shown on the plans, and as directed by the Engineer.

SCOPE OF WORK

Furnish all labor, materials, equipment, transportation and service required to install complete and put in operation the work of this section as shown on the drawings and in accordance with the specifications.

EQUIPMENT

Equipment shall have a built in agitation system and operating capacity sufficient to agitate, suspend and homogeneously mix slurry of organic mulching amendment plus fertilizer, chemical additives and solids. The tank shall have a minimum capacity of 1,000 gallons, unless the Contractor can demonstrate to the Engineer that a smaller capacity tank is capable of performing all operations satisfactorily.

COMMERCIAL FERTILIZER

Commercial fertilizer shall conform to the requirements of the California Food and Agricultural Code.

Commercial fertilizer for erosion control work shall be in homogeneous pelleted form and shall have a guaranteed chemical analysis of 15% nitrogen (13% Ammoniacal, 2% Urea), 15% phosphoric acid and 15% water soluble potash, and shall contain a minimum of 9% sulfur.

Application rate shall be 7 lbs. per 1,000 s.f.

Product shall be loaded into the hydromulch in the presence of the Engineer.

A Certificate of Compliance for fiber shall be furnished to the Engineer in conformance with the provisions in Section 6-1.07, "Certificates of Compliance."

FIBER AND TACKIFIER

Shall be a Bonded Fiber Matrix (BFM) hydraulically applied erosion system, consisting of 100% long strand, virgin soft-wood fibers, bound together by a pre-blended, high-strength 100% gar-gum tackifier. The virgin soft-wood fibers shall be thermo-mechanically defibrated from clean whole wood chips, containing a minimum of 25% of the fibers averaging 10 mm long, with a minimum of 50% or more retained on a #24 mesh screen. The organic binders shall be a high viscosity. Water content of the fiber before mixing into slurry shall not exceed 15 percent of the dry weight of the fiber. Fiber shall contain less than 250 parts per million boron and shall be otherwise nontoxic to plant or animal life. Fiber shall have a water-holding capacity by weight of not less than 1,200 percent.

The BFM shall be of such character that it will disperse uniformly into slurry when mixed with water. The slurry, when hydraulically applied to the ground, shall form an absorptive mat of mulch uniformly impregnated with seed and other ingredients. Fiber shall be mixed with water per the manufacturer's recommendations and multidirectional. Applied Fiber shall be color contrast with the area on which the fiber is to be applied and shall not stain concrete or painted surfaces. No materials which inhibit growth or germination shall be present in the mixture.

A Certificate of Compliance for fiber shall be furnished to the Engineer in conformance with the Standard Specifications 4-1.4 and 4-1.5.

SEED

Seed required to be labeled under the California Food and Agricultural Code, shall be labeled by the vendors supplying the seed. Seed shall have been tested for purity and germination not more than 12 months prior to the application of the seed. The test results from seed testing shall be delivered to the Engineer prior to applying the seed. Seed labels furnished by the seed vendors supplying the seed shall indicate the purity, germination, and pure live seed as determined by testing.

Seed with a germination rate lower than the minimum rate specified may be used when approved by the Engineer in writing.

Before seeding, the Contractor shall furnish written evidence (seed label or letter) to the Engineer that seed, not required to be labeled under the California Food and Agricultural Code, has been tested for purity and germination by a seed laboratory certified by the Association of Official Seed Analysts, or a seed technologist certified by the Society of Commercial Seed Technologists.

The percentage of seed germination shall include the germination percentage of any hard and dormant seed.

Seed specified without a germination requirement, at the time of sowing, shall be from the previous or current year's harvest, and shall be labeled to include the name, date (month and year) collected and the name and address of the seed supplier.

All shipments of seed not accompanied by a valid California Nursery Stock Certificate shall be reported to the County Agricultural Commissioner at the point of destination for inspection and shall be held until released by the Commissioner.

Seed treated with mercury compounds shall not be used.

All inoculated seed shall be labeled to show the weight of seed, the date of inoculation and the weight and source of inoculant materials.

Legume seed shall be pellet-inoculated in conformance with the requirements in Bulletin 1842, Range-Legume Inoculation and Nitrogen Fixation by Root-Nodule Bacteria," of the University of California, Division of Agriculture and Natural Resources. Inoculant shall be added at the rate of 2 pounds of inoculant per 100 pounds of legume seed.

Inoculated seed shall be sown within 90 days of inoculation.

Seed shall be Wildfire Seed Mix #2, consisting of 50% Meadow Barley (Horeum brachyantherum), 36% Molate Fescue (Festuca rubra 'Molate'), 11% Arroyo Lupine (Lupinus succulentus), 3% California Poppy (Eschscholzia californica), as manufactured by Stover Seed Company (or approved equal). The seeding rate shall not be less than 1 lb. per 1,000 s.f.

A Certificate of Compliance for fiber shall be furnished to the Engineer in conformance with the Standard Specifications 4-1.4 and 4-1.5.

WATER

Water shall be of such quality that it will promote germination of seeds and growth of plants.

EXECUTION

1. Installation procedures:

    a. Inspection of conditions: Examine related work including irrigation and grading of surface before proceeding with any work and notify the Engineer in writing on conditions which may prevent the proper execution of this work. Failure to report unsuitable conditions will require the Contractor to rectify unacceptable work at no additional cost to the City.
    b. If rain is imminent or soil temperatures are below 40°, hydroseeding shall not occur.
    c. Water all plant areas thoroughly to saturate upper layers of soil prior to the hydroseeding operation.
    d. Allow the planting area soil surface to dry out for one day only prior to the hydroseeding application. Exercise care not to allow the soil surface to be overly saturated with water prior to the hydroseeding installation. At the same time the soil surface should not become too dry during this period. There should be some residual moisture within the first 1/4 inch of the soil surface.
    e. Prior to starting the hydroseeding operation notify the Engineer two (2) working days in advance to be present at start of start of hydroseeding.

2. Hydroseeding Application:

   a. Apply the hydroseeding in the form of slurry consisting of fiber, tackifier, commercial fertilizer, and any other chemicals that are specified. When hydraulically sprayed onto the soil, the mulch shall form a blotter-like material. Direct the spray operation so that this procedure will drill and mix the slurry components into the soil, the slurry spray will also penetrate the soil surface, thus ensuring maximum impregnation and coverage. The impregnation and mixing of the components will help in retaining moisture while stabilizing soil surface from superficial erosion.
   b. Do not let the hydroseeding slurry components in the hydroseeding machine for more than two (2) hours due of possible seed destruction. If slurry components are left for more than two (2) hours in the machine, add 50% more of the originally specified seed mix to any slurry mixture which has not been applied within the two hours after mixing. Add 75% more of the original seed mix to any slurry mixture which has not been applied eight (8) hours after mixing All mixtures more than eight (8) hours old must be disposed, off-site, at the contractor's expense.
   c. Spray the area with a uniform visible coat, using the dark color of the cellulose fiber as a visual guide. The slurry shall be applied in a downward drilling motion via a fan stream nozzle. Insure that all of the slurry components enter and mix with the soil. Insure the uniformity of the hydroseed application. The hydraulic contractor shall be approved by the Engineer.
   d. Exercise special care to prevent any of the slurry from being sprayed onto any hardscape areas including concrete walks, fences, walls, buildings, etc. Remove all slurry sprayed onto these surfaces at the contractor's expense.
   e. A dispersing agent may be added to the mixture provided the Contractor furnishes evidence that the additive is not harmful. Any material considered harmful, as determined by the Engineer, shall not be used.
   f. Pedestrians or equipment shall not be permitted to enter areas where hydro mixtures have been applied.
   g. Contractor shall save all seed and fertilizer tags and fiber mulch bags for the Engineer to verify compliance with the drawings and specifications.
   h. The Engineer shall be present during the hydroseeding operation and has final determination if conditions are acceptable for hydroseed application.

MAINTENANCE

1. Upon acceptance of hydroseeding operations, maintain all hydroseeding areas for a period of 90 calendar days as follows:

   a. Germination stage irrigation: Approximately 24 hours after hydroseeding the planting areas, initiate the watering sequence. Leave the water on long enough to moisten the soil thoroughly to the depth of the slurry mulch taking care not to super saturate or wash away the slurry and seed. Perform frequent, light irrigation until all the seed has germinated. Repair all seed washings and erosion.

b. Establishment stage irrigation: After germination, reduce each watering. The specific watering program shall be approved by the Engineer.

2. Fertilization: Fertilize all hydroseed areas with the fertilizer specified herein, 30 calendar days from the start of the maintenance period and continuing once every 60 calendar days until the completion of the 90 calendar day maintenance period.

3. Weeding: All concentrated developments of weed growth appearing in the seed mix planting areas during the maintenance period shall be removed at two (2) week intervals. The Contractor may elect to remove such concentrations of weeds manually or by a City approved herbicide program.

4. Minimum Coverage and Acceptance:
   a. Minimum coverage: Final acceptance may be given at the end of the 90 calendar day maintenance period if an acceptable germination of turf and adequate plant establishment has been obtained, as determined by the Engineer.
   b. Final approval and acceptance will be given in writing by the Engineer following a final acceptance inspection. The Engineer reserves the option to extend the maintenance period to achieve complete germination of all turf or other plant materials with a uniform height, color and density throughout all hydroseeded areas.

MEASUREMENT AND PAYMENT

The quantity of erosion control hydroseeding will be measured by the square foot as determined from actual slope measurements of the areas covered by the erosion control hydroseeding.

The contract price paid per square foot (SF) for "Erosion Control Hydroseed (Type B)" includes full compensation for furnishing all labor, materials, tools, equipment, and incidentals, and for doing all the work involved in erosion control hydroseeding, complete in place, including maintenance, as shown on the plans, as specified in the Standard Specifications and these special provisions, and as directed by the Engineer.

FIBER ROLL (BID ITEM NO. 53)

Fiber roll shall be either:

Constructed with a premanufactured blanket consisting of wood excelsior, rice or wheat straw, or coconut fibers or a combination of these materials. The blanket shall be between 6 feet and 8 feet in width and between 65 feet and 95 feet in length. Wood excelsior shall be individual fibers, of which 80 percent shall be 6 inches or longer in length. The blanket shall have a photodegradable plastic netting or biodegradable jute, sisal, or coir fiber netting on at least one side. The blanket shall be rolled along the width and secured with jute twine spaced 6 feet apart along the full length of the roll and placed 6 inches from the ends of each roll. The finished roll shall be between 8 inches and 10 inches in diameter, a minimum of 20 feet in length, and shall weigh a minimum of 0.5 pound per linear foot. More than one blanket may be required to achieve the finished roll diameter. When more than one blanket is required, blankets shall be jointed longitudinally with an overlap of 6 inches along the length of the blanket.

A premanufactured roll of rice or wheat straw, wood excelsior, or coconut fiber encapsulated within a photodegradable plastic or biodegradable jute, sisal, or coir fiber netting. The netting shall have a minimum durability of one year after installation. The netting shall be secured tightly at each end of the roll. Rolls shall be between 8 inches and 12 inches in diameter. Rolls between 8 inches and 10 inches in diameter shall have a minimum weight of 1 pound per linear foot and a minimum length of 20 feet. Rolls between 10 inches and 12 inches in diameter shall have a minimum weight of 3 pounds per linear foot and a minimum length of 10 feet.

Wood stakes shall be a minimum of 1" x 1" x 24" in size. Wood stakes shall be untreated fir, redwood, cedar, or pine and cut from sound timber. They shall be straight and free of loose or unsound knots and other defects which would render them unfit for the purpose intended. Metal stakes shall not be used.

Fiber rolls shall be installed as follows:

Furrows shall be constructed to a depth between 2 inches and 4 inches, and to a sufficient width to hold the fiber roll. Stakes shall be installed 24 inches apart along the length of the fiber rolls and stopped at 12 inches from each end of the rolls. Stakes shall be driven to a maximum of 2 inches above, or flush with the top of the roll.

Fiber rolls shall be placed at the top and bottom of all slopes greater than 5 feet in height. Additional fiber rolls shall be incorporated to provide a maximum spacing of 8 feet apart, along the slope, between fiber rolls.

The bedding area for the fiber rolls shall be cleared of obstructions including rocks, clods, and debris greater than one inch in diameter before installation.

Fiber rolls shall be installed approximately parallel to the slope contour.

If the intended function of the fiber rolls to disperse concentrated water runoff and to reduce runoff velocities is impaired, the Contractor shall take action to repair or replace the fiber rolls. Split, torn, or unraveling rolls shall be repaired or replaced. Broken or split stakes shall be replaced. Sagging or slumping fiber rolls shall be repaired with additional stakes or replaced. Locations where rills and other evidence of concentrated runoff have occurred beneath the rolls shall be corrected. Fiber rolls shall be repaired or replaced within 24 hours of identifying the deficiency.

Quantities of fiber rolls to be paid for will be determined by the linear foot measured along the centerline of the installed roll. Where fiber rolls are joined and overlapped, the overlap will be measured as a single installed roll.

The contract price paid per linear foot (LF) for "Fiber Roll" shall include full compensation for furnishing all labor, materials, tools, equipment, and incidentals, and for doing all the work involved in installing fiber rolls, complete in place, including furrow excavation and backfill, repairing or replacing fiber rolls as shown on the plans, as specified in the Standard Specifications and these special provisions, and as directed by the Engineer.

FURNISH AND INSTALL 24" RCP (BID ITEM NO. 54)

Reinforced concrete pipe (RCP) shall be in conformance with Section 207-2, "Reinforced Concrete Pipe (RCP)," and Subsection 306-1.2.2, "Pipe Laying," and 306-1.2.4, "Installation, Field Jointing and Inspection of Reinforced Concrete Pipe," of the Standard Specifications.

Subsection 207-2.1, "General," of the Standard Specifications, the fifth paragraph, shall be deemed revised to include the following:

> "Plants and processes shall be qualified by Riverside County Flood Control and Water Conservation District (RCFC & WCD)."

Subsection 207-2.2 "Materials" of the Standard Specifications shall be deemed revised to include the following:

> The Engineer shall be furnished a "Certificate of Compliance," signed by the manufacturer of the pipe certifying that the pipe conforms to the ASTM requirements. All pipe and pipe material supplied by the Contractor shall be new.

D-load bearing strength test for new pipe is required, in conformance with Section 207-2.9.1(1) and 207-2.9.2, of the Standard Specifications, as a basis for acceptance of the pipe. The test shall be performed in the presence of a representative from RCFC & WCD and the Engineer.

Pipe shall be laid in a trench free of ponded water in conformance with Section 306-1.2.2, "Pipe Laying," with joints in conformance with Section 306-1.2.4, "Installation, Field Jointing and Inspection of Reinforced Concrete Pipe," of the Standard Specifications, and the following:

> Pipe ends shall be cleaned and moistened prior to making up the joint.

Subsection 306-1.2.4, "Installation, Field Jointing and Inspection of Reinforced Concrete Pipe," of the Standard Specifications, the second paragraph of (b) "Tongue and Groove (T & G) Self-Centering Joints," shall be deemed revised to include the following:

> Unsymmetrical closure of pipe joints shall not exceed 1 inch pull on the outside of the curve when pull is measured at the springline on the inside of the pipe. Mortar joints on curves shall conform in strength, texture of mortar finish, and tightness to the joints for straight ended pipe.

When beveled pipe is used the maximum deflection angle shall not exceed 6 degrees unless shown on the Plans or approved by the Engineer.

Subsection 306-1.2.4, "Installation, Field Jointing, and Inspection of Reinforced Concrete Pipe," of the Standard Specifications, shall be deemed revised to include the following:

> Portland Cement Concrete (PCC) Collar shall be constructed in accordance with the Plan, Riverside County Flood Control and Water Conservation District Standard Drawings, and as approved by the Engineer. Included in this item are concrete, reinforcing steel, and appurtenances required for the construction of Concrete Collar, complete in place.

One (1) sack slurry backfill shall be required where RCP mainline and laterals cross existing major utility crossings where compaction is not possible (i.e. multiple conduits). Payment for one (1) sack slurry backfill shall be considered to be included in various items of storm drain work, and no additional compensation will be allowed therefore.

The contract unit price paid per linear foot (LF) "Furnish and Install 24" RCP" shall include full compensation for all materials, labor, tools, equipment and incidentals, and for doing all the work involved in supplying and installing reinforced concrete pipe, complete in place, including but not limited to excavation, bedding materials, concrete collars and reinforcement, backfill, and compaction, as shown on the Plans, per these Special Provisions, and as directed by the Engineer, and no additional compensation will be allowed therefore.

TRENCH EXCAVATION, BEDDING, AND BACKFILL

Trench Excavation, Bedding, and Backfill shall be in conformance with Section 306, "Underground Conduit Construction," and related sections of the Standard Specifications, and these Technical Provisions.

Trench Excavation, Subsection 306-1.1.1, "General," of the Standard Specifications, shall be deemed revised to include the following:

> Excavation covers the removal of all material including but not limited to asphalt, aggregate base, abandoned pipelines, boulders, and concrete from within the excavation. The Contractor shall not disturb any vegetation or stream bed soils and shall not allow any employee, equipment, and material to encroach within 1.5 m (5 ft) or cross a blue line stream bed as designated on U.S. Geological Survey Topographic Maps. The Contractor shall abide by all conditions and provisions of the California Department of Fish and Game Permit, California Regional Water Quality Control Board Permit and the U.S. Army Corps of Engineers Permit. The Contractor may be subject to civil and criminal penalties if found in violation.

In excavating for surfaces against which concrete is to be placed, care shall be exercised in removing the final lift, as not to loosen the remaining soil. Upon completion of excavation for structures and pipe, surfaces against which concrete is to be placed shall be free of debris, mud or ponded water.

The foundation for all concrete structures including concrete channels and sideslopes for slope paving will be inspected and tested after excavation. The subgrade shall be compacted to ninety percent (90%) relative compaction prior to the placement of concrete.

Material, which will not provide a suitable foundation, shall be removed and replaced with compacted select material as directed by the Engineer.

Any overexcavation shall be filled with select material compacted to ninety percent (90%) relative compaction and meeting the material requirements for backfill.

The removal of bedrock material from within the excavation which requires the use of blasting, or equipment beyond that normally used to accomplish the excavation (as determined by the Engineer) shall be paid for in accordance with Section 3, "Changes in Work".

Slides and materials eroding into the work shall be removed by the Contractor and the slopes and grades refinished to original grades as specified.

The topography shown on the Plans may vary from the actual field conditions due to erosion caused by recent storms. The fill material shall be placed such that it does not block drainage and cause ponding. Placement of fill material on other properties within the City requires a stockpile or grading permit.

In the event of damage to existing or new facilities during the process of construction, the Contractor shall promptly repair the damage, and shall pay for all costs of the repair, and shall be liable for all costs resulting from the interruption of any services.

Payment for trench excavation shall be considered as included in the contract price paid for the various related items of work and no additional compensation shall be allowed therefor.

Unprotected trenches shall not remain open overnight. Work areas shall not be opened to traffic prior to placement of temporary resurfacing. The temporary resurfacing, per Subsection 306-1.5 "Trench Resurfacing" of the Standard Specifications, shall be a minimum thickness of 75 mm (0.25 ft) and must be continually maintained to provide a smooth safe ride for vehicles. When backfilling an excavation in the roadway (whether transverse or longitudinal) which cannot be properly completed within a work day, steel plate bridging with a non-skid surface and shoring may be required to preserve unobstructed traffic flow or chain link fence with proper delineation as approved by the Engineer.

In the case of steel plating, the following conditions shall apply:

1. The pavement shall be cold milled to a depth equal to the thickness of the plate and to a width and length equal to the dimensions of the plate.
2. Steel plates used for bridging must extend a minimum of 12 in beyond the edges of the trench.
3. Steel plates must meet required traffic loads and non-skid surface.
4. The trench shall be adequately shored to support the bridging and traffic loads.
5. Steel plate bridging shall be installed to operate with minimum noise.
6. Multiple plates must be tack welded as needed to secure plates.
7. Bridging shall be secured against displacement by using adjustable cleats, shims or other devices.
8. Temporary paving with cold asphalt concrete shall be used to feather the edges of the plates.

Steel plate bridging shall be installed using the following Method:

The pavement shall be cold planed to a depth equal to the thickness of the plate and to a width and length equal to the dimensions of the plate.

Unless authorized by the Engineer, steel plate bridging should not exceed four consecutive working days.

The following table shows the advisory (not mandated) thickness of steel plate bridging needed for a given trench width. The Contractor is responsible for selecting the plates to be used:

TRENCH WIDTH	THICKNESS
0.25 m (10 in) (0.83 ft)	13 mm (1/2 in)
0.6 m (23 in) (1.92 ft)	19 mm (3/4 in)
0.8 m (31 in) (2.59 ft)	22 mm (7/8 in)
1.05 m (41 in) (3.42 ft)	25 mm (1 in)
1.6 m (63 in) (5.25 ft)	32 mm (1-1/4 in)

Steel plate bridging shall be steel of minimum A 36 grade designed for HS20-44 truck loading per Caltrans Bridge Design Specifications Manual. The Contractor shall maintain on the steel plate a non-skid surface having a minimum coefficient of friction equivalent to 0.35 as determined by California Test Method 342. If a different test method is used, the permittee may utilize standard test plates with known coefficients of friction to correlate skid resistance results to California Test Method 342. These test plates are available from each Caltrans District Materials Engineer.

If the steel plate is permanently deformed without loading to at least 1.2 cm (1/2 in), (0.04 ft) per 2.5 meter length (8 ft), the Contractor shall remove and replace the plate.

A Rough Road Sign (W33), with black lettering on an orange background, may be used in advance of steel plate bridging. This sign is to be used along with any other required construction signing.

The Contractor shall be responsible for maintenance of the steel plates, shoring, and asphalt concrete ramps.

The Contractor shall be responsible for restoring all temporary and permanent striping, markings, and markers that have been damaged due to trench excavation or related operations.

Payment for temporary bituminous resurfacing, steel plates, fencing, and other related work to secure the trench shall be considered as included in the contract price paid for the various related items of underground construction. Payment for temporary and permanent striping, markings, and markers restoration shall be considered as included in the contract price paid for Traffic Striping, Pavement Markings, and Pavement Markers.

Subsection 306-1.2.1, "Bedding (A) General," of the Standard Specifications, shall be deemed revised to include the following:

> Sand used for bedding shall be free from clay or organic material, suitable for the purpose intended, and shall be of such size that 90 percent to 100 percent will pass a 4.75 mm (No. 4) sieve and not more than 5 percent will pass a 75 μm (No. 200) sieve.

Bedding shall be densified to not less than ninety (90) percent relative compaction. The Contractor shall make provisions for the City to take a compaction test at the spring line (half the diameter of the pipe measured vertically), or lower at the discretion of the Engineer, and at the top of the bedding.

Subsection 306-1.3.1, "General," of the Standard Specifications, fourth paragraph, shall be deemed revised to read as follows:

When the depth of cover of the top pipe or cable is less than 760 mm (30 in), the top 610 mm (24 in) of backfill measured from the surface shall be compacted to ninety-five (95) percent relative compaction. The Contractor may elect to use trench backfill slurry per Subsection 201-1 or CSCM per Subsection 201-6, as approved by the Engineer.

Subsection 306-1.3.1, "General," of the Standard Specifications, sixth paragraph, shall be deemed revised to read as follows:

Regardless of the method of densification, backfill material shall not be placed against any reinforced concrete structure until the structure has been inspected and approved for backfilling by the Engineer.

The Contractor may place fill or backfill against or over the top of any cast-in-place structure in accordance with Table 306-1.3.1 (A) only after the concrete has developed eighty (80%) percent of its design strength or is approved by the Engineer. No traffic will be permitted on the top of any cast-in-place concrete structure, until the concrete in the structure has attained its design strength.

Subsection 306-1.3.1, "General," of the Standard Specifications, shall be deemed revised to include the following:

All backfill and bedding around structures shall be compacted to not less than ninety percent (90%) relative compaction. Where such material is placed under paved roadways, the top three feet measured from the finished subgrade shall be compacted to ninety-five percent (95%) and shall be compacted by Mechanical compaction. Densification of backfill above the bedding by flooding and jetting will not be allowed. Compaction tests may be taken at the trench bottom shown on the profile and at the discretion of the Engineer.

Backfill material placed above the bedding shall consist of processed miscellaneous base or 1 ½ sack cement slurry for paved areas, as approved by the Engineer. Backfill material placed above the bedding shall consist of select material from the excavation and imported material for unpaved areas, as approved by the Engineer.

The Contractor shall make provision and provide access to all trenches for the Engineer's representative to perform relative compaction tests and any other work as required at various levels and locations. All relative compaction tests will be made by the Engineer or representative in conformance with ASTM D1557.

Subsection 306-1.3.2, "Mechanically Compacted Backfill," of the Standard Specifications, shall be deemed revised to include the following:

> Densification of backfill shall be mechanically compacted by means of tamping rollers, or other mechanical tampers. Impact-type pavement breakers (stompers), freefall or stomping equipment will not be permitted unless otherwise approved by the Engineer. Densification of backfill by flooding or jetting shall not be allowed.

All backfill material for structures shall be placed in horizontal, uniform layers, and shall be brought up uniformly on each side of the structure. The thickness of each layer of backfill shall not exceed 203 mm (8 in) before compaction unless otherwise approved by the Engineer.

Approval to use specific methods and compaction equipment shall not be construed as guaranteeing or implying that the use of such methods and equipment will not result in damage to adjacent ground, existing improvements, or improvements installed under the Contract, nor shall it be construed as guaranteeing proper compaction. The Contractor shall make his own determination in this regard.

Subsection 306-1.3.5, "Jetted Bedding and Backfill Compaction Requirements," and Subsection 306-1.3.6, "Mechanical Compaction Requirements," of the Standard Specifications, shall be deemed revised regarding the percent relative compaction as follows:

1. Ninety percent (90%) relative compaction;
2. Ninety-five percent (95%) relative compaction.

Payment for bedding and trench backfill shall be considered as included in the contract price paid for the various related items of work and no additional compensation shall be allowed therefor.

TRENCH SHORING AND SAFETY (BID ITEM NO. 55)

Trench Shoring includes furnishing and placing such shoring or bracing as required by Section 1541.1, of the California Construction Safety Orders of the Division of Occupational Safety and Health, Title 8, Chapter 4, Article 2, and Subsections 2-5.3, "Shop Drawings," 7-10.4.1, "Safety Orders," and Section 306, "Underground Conduit Construction," of the Standard Specifications, or as directed by the Engineer.

Replace the second paragraph of Subsection 7-10.4.1, "Safety Orders" with the following:

> The Contractor shall be responsible for the design of the trench shoring and obtaining soil investigation for the design. The Contractor shall designate a responsible member of his organization at the site whose duty shall be the prevention of hazards and accidents. This person shall be the Contractor's Superintendent unless otherwise designated in writing by the Contractor to the City.

Excavation for any trench 1.5 m (5 ft.) or more in depth shall not begin until the Contractor has received approval from the Engineer, and a detailed Plan for worker and any other persons

protection from the hazards of caving, sliding, or settling ground during the excavation of the trench. The Plan shall show the details of the design of shoring, bracing, sloping, or other provisions to be made for workers or other persons protection including any design calculations done in the preparation of the Plan. No such Plan shall allow the use of shoring, sloping, or a protective system less effective than that required by the California Construction Safety Orders of the Division of Occupational Safety and Health. The Plan shall be prepared and signed by an engineer who is registered as a civil engineer in the State of California, and the Plan and design calculations shall be submitted for review at least two (2) weeks before the date the Contractor intends to begin trenching operations.

All safety Plans shall reflect surcharge loadings imparted to the side of the trench by equipment and stored materials. Surcharge loads shall be monitored to verify that such loads do not exceed the design assumptions for the system.

The Contractor should not assume that only one type of trench safety system such as a shield or "trench box" will be adequate for all trenching situations encountered on a given project. The Contractor should be prepared with alternative safety system designs (such as solid sheeting) should construction circumstances dictate the use of such.

Trench safety system designs for support systems, shield systems, or other protective systems whether drawn from manufacturers data, other tabulated data, or designed for this particular project must be signed by a civil engineer registered in the State of California prior to submittal to the City for review. A shoring Plan for the specific use of a shield shall be prepared. Catalogs or engineering data for a product should be identified in the Plan as supporting data. All specific items or applicable conditions must be outlined on the submittal.

When working in, or connecting to, existing systems which are in operation, the required safety provisions for work in an operating system will be enforced, including provisions for working in confined air spaces when appropriate.

Nothing in this requirement shall be construed to impose tort liability on the City or any of its employees.

Add to Subsection 306-1.1.1, "General," the following:

> Trench Safety is defined as a method of protecting workers and any other persons from cave-ins (sliding or settling), from material that could fall or roll from an excavation face or into an excavation, or from the collapse of adjacent structures. Trench safety systems include support systems, sloping and benching systems, shield systems, and other systems that will provide necessary protection.

Add to Subsection 306-1.1.4, "Access to Trenches," the following:

> Shoring, includes furnishing and placing such shoring or bracing as required by Section 1541.1, of the California Construction Safety orders of the Division of Occupational Safety and Health, Title 8, Chapter 4, Article 2, and Section 306-1.1.6, "Bracing Excavations," of the Standard Specifications, or as directed by the Engineer.

The Contractor shall provide safe and suitable access to trenches when, and wherever, the Engineer and Geotechnical Engineer need to enter for inspection and testing. It can be reasonably construed that the Contractor shall leave shoring in, or place shoring for, said access.

At no time shall any person, which also includes but is not limited to, contracting company owners, executives, supervisors and workers, enter or have cause to be in a trench without proper shoring.

Add to Subsection 306-1.1.6, "Bracing Excavations," the following:

> The Contractor shall furnish, place, and maintain adequate bracing and shoring as required to support the sides of the excavations to prevent the earth from sliding or settling and to provide the proper protection of workers, or any other persons, to prevent damage to the pipes, manholes being constructed, adjacent structures or facilities, and all other existing improvements of any kind. Any damage resulting from a lack of adequate shoring and bracing shall be the responsibility of the Contractor. The Contractor shall effect all necessary repairs or reconstruction at the Contractor's own expense as directed by the Engineer and shall bear all other expenses resulting from such damage. Upon completion of the work, all bracing and shoring shall be removed unless otherwise directed or permitted by the Engineer.

Also included in the trench shoring is fencing of the open trench as required for the safety of the general public as determined by the Engineer. All shoring Plans and design data must be submitted to the City for approval two weeks prior to beginning work involving the use of shoring.

The Contractor shall not permit any person for whom he or she is responsible or liable to enter or remain on the site of the work unless the person is equipped with and wearing a safety helmet and other protective clothing and safety equipment conforming to the requirements of the City or regulatory agencies, and shall discharge from the site all persons not so equipped. The Contractor shall post conspicuous signs at appropriate locations warning the public and persons engaged upon the work of this requirement. The Contractor shall furnish for their temporary use such safety equipment as required.

The Contractor shall not permit or allow any person or persons to enter any pipe or space containing hazardous or noxious substances or gases, or where there is an insufficient amount of oxygen to sustain life and consciousness, or any other hazardous area unless equipped with lawful and appropriate safety equipment and life-supporting apparatus, and unless those entering are continually monitored and guarded by and in communication with other persons outside the space or area who are equipped in the same way, can give an alarm to others for assistance, and initiate immediate rescue operations in the event of mishap.

The contract lump sum (LS) paid for "Trench Shoring and Safety" shall include full compensation for complying with the requirements of the section, Title 8, Chapter 4, Article 2, Section 1541.1, and other related construction safety orders these special provisions, the Standard Specifications, and as directed by the Engineer, and no additional compensation shall

be allowed therefor. Payment will be made on a basis of the percentage of the work completed on the items related to trenching operations.

CONCRETE DRAINAGE STRUCTURES (BID ITEM NOS. 56, 57, 58, 59, 60, 61, 62, 63, 64, AND 65)

Concrete drainage structures shall conform to the provisions of Section 303, "Concrete Structures," of the Standard Specifications, and these Special Provisions.

Subsection 303-1.1, "General," shall be deemed revised to include the following:

> Drainage inlets, head walls, end walls, junction structures, transition structures, manholes, and other types of Portland Cement Concrete structures shall be constructed to the lines and grades in accordance with the designs and details shown on the Plans and as specified in the Specifications.

This work shall include construction of structures of cast-in-place concrete or of precast concrete members using either unreinforced, reinforced, or prestressed concrete or any combination thereof.

All sewer mains and laterals shall be protected in accordance with RCFC & WCD Standard Plans.

The work involved in precast concrete members shall include the manufacture, transportation, and storage of girders, slabs, piling, and other structural members of precast concrete and shall also include the placing of all precast concrete members, except piling. The members shall be furnished complete including all concrete, prestressing steel, bar reinforcing steel, and incidental materials in connection therewith.

Subsection 201-1.1.2, "Concrete Specified by Class and Alternate Class," of the Standard Specifications, Table 201-1.1.2 (A), shall be deemed revised to include the following:

A. The ingredients are to be well mixed and brought to the proper consistency and to have a compressive strength at the age of 28 days of not less than the amount shown in the following tabulation for each type of work listed:

CONCRETE CLASS 385-B-28	TYPE OF WORK Cast-in-Place-Pipe
385-B-28 (650-B-4000)	Transition Structure No. 1, 2 & 4
300-C-23 (560-C-3250)	Manholes, Transition Structure No. 3 Catch Basin No. 1, 4 Junction Structure No. 1, 2, 3, 4, & 6 Bulkheads, headwalls, cutoff walls, collars, Encasements and miscellaneous concrete not otherwise specified.

The Contractor shall submit mix designs for all types of concrete to be placed for approval by the Engineer prior to placement of any concrete.

Subsection 201-1.2.5, "Fly Ash," of the Standard Specifications, shall be deemed revised to include the following:

> Fly Ash may be substituted for cement, up to a maximum of 15 percent by weight for all concrete. Fly Ash shall meet the standards of ASTM Designation: C 618. When Fly Ash is used, water reducing agents meeting ASTM Designation: C 494 will be permitted in amounts recommended by the supplier and approved by the Engineer.

No other admixture shall be used in any class of concrete without the prior approval of the Engineer.

Subsection 201-1.43, "Transit Mixers," of the Standard Specifications, shall be deemed revised to include the following:

> Ready mixed concrete delivered to the job site shall be accompanied by a ticket containing the weight of each of the individual ingredients in the concrete mix.

Pumping of water from the interior of any structure or foundation enclosure shall be done in such manner as to preclude the possibility of any portion of the concrete materials being carried away. No pumping will be permitted during the placing of concrete, or for a period of at least 24 hours thereafter, unless it is done from a suitable sump separated from the concrete work.

Subsection 303-1.1, "Forms," of the Standard Specifications, shall be deemed revised to include the following:

> Concrete shall not be deposited in the forms until all work connected with constructing the forms has been complete, all materials required to be embedded in the concrete have been placed for the unit to be poured, and the Engineer has inspected the forms and materials. This work shall include the removal of all dirt, chips, sawdust, water, and other foreign material from the forms.

The rate of depositing concrete in forms shall be controlled to prevent deflections of the forms or form panels in excess of the deflections permitted by these Specifications.

Forms for all concrete surfaces that will not be completely enclosed or hidden below the permanent ground surface shall conform to the requirements herein for forms for exposed surfaces. Interior surfaces of underground drainage structures shall be considered to be completely enclosed surfaces.

Prior to the use of each forming system to be used for exposed surfaces and when requested by the Engineer, the Contractor shall furnish form design and materials data to the Engineer for approval.

Forms for exposed concrete surfaces shall be designed and constructed so that the formed surface of the concrete does not undulate excessively in any direction between studs, joists, form stiffeners, form fasteners, or wales. Undulations exceeding either 2.5 mm (1/8 in) or

0.0037- of the center to center distance between studs, joists, form stiffeners, form fasteners, or wales will be considered to be excessive. Should any form or forming system, even though previously approved for use, produce a concrete surface with excessive undulations, its use shall be discontinued until modifications satisfactory to the Engineer have been made. Portions of concrete structures with surface undulations in excess of the limits herein may be rejected by the Engineer.

All exposed surfaces of each element of a concrete structure shall be formed with the same forming materials or with materials which produce similar concrete surface textures, color, and appearance.

Forms for exposed surfaces shall be faced with form panels. A form panel shall be considered to be the continuous section of form facing material, unbroken by joint marks, against which the concrete is placed.

Form panels for exposed surfaces shall be plywood conforming to or exceeding the requirements of U.S. Product Standard PS 1 for Exterior B-B (Concrete Form) Class I Plywood or any material other than plywood which will produce a smooth uniform concrete surface substantially equal to that which would result from the use of that plywood. Only form panels in good condition free of defects, such as scars, dents, or delaminations, shall be used for exposed surfaces.

Form panels for exposed surfaces shall be furnished and placed in uniform widths of not less than 0.9 m (3 ft) and in uniform lengths of not less than 1.8 m (6 ft), except where the width of the member formed is less than 0.9 m (3 ft), the width of the panels shall be not less than the width of the member. Panels shall be arranged in symmetrical patterns conforming to the general lines of the structure. Except when otherwise provided herein or shown on the Plans, panels for vertical surfaces shall be placed with the long dimension horizontal and with horizontal joints level and walls, panels may be placed with the long dimension parallel to the foot-algined, by means of supports or fasteners common to both panels, to result in a continuous unbroken concrete plane surface.

Form fasteners consisting of form bolts, clamps, or other devices shall be used as necessary to prevent spreading of the forms during concrete placement. The use of ties consisting of twisted wire loops to hold forms in position will not be permitted.

Anchor devices may be cast into the concrete for later use in supporting forms or for lifting precast members. Driven types of anchorages shall not be used for fastening forms or form supports to concrete except on interior surfaces of girders in prestressed box girder bridges where the following conditions are met:

> Anchorages penetrate the girder a maximum of 50 mm (2 in) and have a minimum spacing of 150 mm.
>
> The anchorages are placed 75 mm (3 in) clear, minimum, from edge of concrete.
>
> Form fasteners and anchors shall be of those types that can be removed without chipping, spalling, heating, or otherwise damaging the concrete surface.

Forms for drainage inlets may be constructed of any suitable materials that will produce a structure with the inside dimensions and at least the wall thickness shown on the plans. Undulations of finished interior wall surfaces shall not exceed 15 mm (3/4 in). Outside forms shall extend at least 130 mm (5 in) below the top of the inlet. Concrete may be deposited against excavated earth below this depth except that full depth outside forms or other protection shall be used whenever the instability of the earth of the Contractor's operations causes hazardous conditions or contamination of the concrete.

Subsection 303-1.4.4, "Standard Structures," of the Standard Specifications, shall be deemed revised to include the following:

> Forms shall be removed only when approved by the Engineer. Forms shall be removed in such a way as to prevent damage to the concrete. Supports shall be removed in a manner that will permit the concrete to take stresses due to its own weight uniformly.
>
> Forms shall not be removed sooner than the following minimum time or strength after the concrete is placed. These times represents the cumulative number of days and fractions of days, not necessarily consecutive, during which the temperature of the air adjacent to the concrete is above 10oC (50oF). If the temperature falls below 10oC (50oF) at any time after the concrete is placed in the forms, the Engineer will advise the Contractor of additional time required before forms may be removed.

ELEMENT	TIME OR STRENGTH
Reinforced Concrete Box, Transition Structures No. 1, 2 & 4	11.1 MPa (1600 psi)
Cast-in-Place Pipe	6 hours
All other Structures	16-24 hours

Subsection 303-1.7.1, "General", of the Standard Specifications, shall be deemed revised to include the following:

> Reinforcing steel for reinforced concrete boxes, bridges, retaining walls, rectangular channels, spillways and transition structures shall be Grade 400 (60) Billet-Steel. For other reinforced concrete structures the reinforcement shall be Grade 300 (40) Billet-Steel or greater as approved by the Engineer. Reinforcing steel shall conform to the requirements of Subsection 201-2 "Reinforcing for Concrete." In either case, the reinforcing steel for use in structures constructed from State of California, Department of Transportation Standard Plans, shall be of the grade as called for on those Plans. The Contractor shall furnish a "Certificate of Compliance" with the Specification of ASTM Designation: A-615. All splices shall conform to the requirements of the latest edition of A.C.I. Manual, Standard No. 318. Splices requested by the Contractor for his convenience shall be subject to approval by the Engineer.

Before concrete is placed, the reinforcement to be embedded shall be free of mortar, oil, dirt, excessive mill scale and scabby rust, and other coatings of any character that would destroy or reduce the bond.

Reinforcement shall conform accurately to the dimensions shown on the Plans.

Bars shall not be bent or straightened in a manner that will injure the material. Bars with kinks or improper bends shall not be used.

Hooks and bends shall conform to the provisions of the Building Code Requirements for Reinforced Concrete of the American Concrete Institute.

Reinforcement shall be accurately placed as shown on the Plans and shall be firmly and securely held in position by wiring at intersections and splices and by using precast mortar blocks or other approved devices of sufficient strength to resist crushing under applied loads. Wooden, aluminum, ferrous material chairs, and plastic supports shall not be used. Placing bars on layers of fresh concrete as the work progresses will not be permitted.

Subsection 303-1.8.1, "General," of the Standard Specifications, shall be deemed revised to include the following:

> The concrete in each integral part of the structure shall be placed continuously, and the Contractor will not be allowed to commence work on any integral part unless sufficient material for the concrete is on hand, and the Contractor's forces and equipment are sufficient to complete the part without interruption in the placing of the concrete.

Joints in the concrete due to stopping work shall be avoided as far as possible, and when necessary shall be constructed as directed by the Engineer.

Concrete shall be placed and consolidated by methods that will not cause segregation of the aggregates and will result in a dense homogeneous concrete which is free of voids and rock pockets. All concrete shall be placed while fresh and before it has taken an initial set. Retempering any particularly hardened concrete with additional water will not be permitted.

The consistency of the concrete shall be such as to allow it to be worked into place without segregation. Unless otherwise specified, the slump shall be 75 mm (3 in.) for all concrete, except the concrete for the cast-in-place concrete pipe shall have a slump of 50 mm (2 in.).

The slump test shall be performed in accordance with the requirements of ASTM Designation: C 143. Slumps greater than those specified shall be cause for rejection of the concrete by the Engineer.

Concrete shall not be placed except in the presence of the Engineer. The Contractor shall give reasonable notice to the Engineer each time he intends to place concrete. Such notice shall be far enough in advance to give the Engineer adequate time to inspect the subgrade, forms, steel reinforcement and other preparations for compliance with the requirements of the contract Plans and specifications before concrete is delivered for placing.

Subsection 303-1.8.3, "Depositing," of the Standard Specifications, shall be deemed revised to include the following:

> Formed concrete shall be placed in horizontal layers in lifts of not more than 500 mm (20"). Hoppers and chutes, pipes and "elephant trunks" shall be used as necessary to prevent segregation of the concrete.

Subsection 303-1.8.4, "Consolidating," of the Standard Specifications, shall be deemed revised to include the following:

> The Contractor will not be allowed to place concrete until at least two operable high frequency internal vibrators are on the site and shown to be operable to the Engineer.

Subsection 303-1.8.6, "Joints," of the Standard Specifications, shall be deemed revised to include the following:

> When new concrete is shown on the Plans to be joined to existing concrete by means of bar reinforcing steel dowels grouted into holes drilled in the existing concrete, the holes shall be drilled by methods that will not shatter or damage the concrete adjacent to the holes. Holes in which longitudinal or transverse reinforcement is encountered during drilling before the specified depth is attained shall be rejected. A new hole, which does not strike reinforcement, shall be drilled adjacent to the rejected hole to the depth shown on the Plans. With approval of the Engineer, all holes including rejected holes may be cored through reinforcing steel to the correct depth. The diameters of the drilled holes shall be 6 mm (1/4 in) larger than the nominal diameter of the dowels unless shown otherwise on the Plans. The grout shall be a neat cement paste of Portland cement and water. The water content shall be not more than 35 L per 100 kg of cement. Retempering of grout will not be permitted. Immediately prior to placing the dowels, the holes shall be cleaned of dust and other deleterious materials, shall be thoroughly saturated with water, have all free water removed and the holes shall be dried to a saturated surface dry condition. Sufficient grout shall be placed in the holes so that no voids remain after the dowels are inserted. Grout shall be cured for a period of at least 3 days or until the dowels are encased in concrete, whichever occurs first, by either the curing compound method or by keeping the surface of the grout continuously damp. Any dowels or grout, which fail to bond or are damaged before the new concrete is placed, shall be removed and replaced.

Subsection 303-1.9.1, "General," of the Standard Specifications, shall be deemed revised to include the following:

> A tight wood float finish will be required on the surface of all buried structures.

The finish on all exposed formed surfaces shall conform to the requirements of Subsection 303-1.9.3, "Class 1 Surface Finish," of the Standard Specifications and these Special Provisions:

> Surface finish shall be Class 1 Surface Finish unless otherwise approved by the Engineer.
>
> Exposed corners of all concrete structures shall be finished with a 19 mm (3/4 in.) chamfer.

Concrete flatwork shall match adjacent surfaces. The concrete shall be struck off and tamped or vibrated until a layer of mortar has been brought to the surface. The top surface and face of curbs, gutters, and catch basins shall be finished to match adjacent surfaces.

Subsection 303-1.10, "Curing," of the Standard Specifications, shall be deemed revised to include the following:

> The Contractor will not be allowed to place concrete until curing materials and applicators are on the site and shown to the Engineer.

Curing compound shall comply with the requirements of Section 201-4.1, "Membrance Curing Compounds," of the Standard Specifications and Special Provisions. The curing compound shall be No. 5, White Pigmented Curing Compound conforming to the requirements of ASTM designation:
C-309, Type 2, Class B for all concrete surfaces other than for flatwork, which shall be coated with a clear or translucent curing compound containing a red fugitive dye.

The curing compound shall be sprayed on the moist concrete surface as soon as free water has disappeared, but shall not be applied to any surface until patching, repairs, and finishing of that surface are completed. The curing compound shall be thoroughly mixed immediately before applying, and shall be applied at a uniform rate of not less than 3.785 L (1 gallon) per 14 m2 (150 square feet) of surface.

Weepholes/Drain Holes shall be constructed in abutment walls, catch basins, retaining walls, and wing walls in accordance with the Plans, Specifications, and at locations directed by the Engineer.

All weepholes shall be 65 mm (2-1/2 in.) in diameter unless noted otherwise on the drawings. Weepholes may be formed by scheduled 40 PVC pipe or greater, or other methods acceptable to the Engineer.

All weepholes shall have a rodent screen consisting of hardware cloth securely and permanently attached over the drains opening on the back face of the wall.

The hardware cloth shall be a commercial quality, approximately 6mm (1/4inch) mesh wire cloth of galvanized steel wire. The steel wire before galvanizing shall have a diameter of 600 μm, minimum. Hardware cloth shall be mounted in the forms prior to placing concrete in such a manner that the wire is firmly bonded to the concrete or may be fastened to the exterior of the concrete surface by masonry nails or other methods approved by the Engineer.

Filter material for the weepholes shall be 25 mm (1 in.) nominal size crushed rock conforming to the gradation of Section 200-1.2, of the Standard Specifications. Filter material shall also meet the quality requirements of Sections 200-1.1 and 200-1.2 of the Standard Specifications.

Filter material shall be wrapped in a single layer of filter fabric as shown on the drawings or approved by the Engineer. Filter fabric shall conform to that specified for underdrains per Section 88.1.03, of the State of California Standard Specifications.

Filter fabric shall be furnished in protective wrapping which shall protect the fabric from ultraviolet radiation and from abrasion due to shipping and handling. The fabric shall also be ultraviolet stabilized.

The fabric shall be placed in the manner and at the locations shown on the drawings. The surface to receive the fabric shall be prepared to a smooth condition free of obstructions and debris.

The fabric shall be covered within 72 hours of is placement. Should the fabric be damaged during construction, the torn or punctured section shall be repaired or replaced as directed by the Engineer.

Manhole rings are required and shall conform to ASTM Designation C-478 and the drawings. The rings shall be laid up using Type II cement with a 1:2 mix mortar, and with 13 mm (1/2 in) minimum thickness pointed joints. On completion, the vertical wall section shall not be out of plumb by more than 13 mm (1/2 in) in 3 m (10 ft') of vertical height. The manhole rings shall also be accurately aligned. The cast iron manhole frame and cover shall be installed, with the frame accurately set to the finished grade of pavement, in mortar well tamped around the perimeter of the frame to ensure full bearing.

Manhole frames and covers shall conform to Subsection 206-3, "Gray Iron Castings" of the Standard Specifications.

Revise the second paragraph of Subsection 206-3.1 " General," of the Standard Specifications to include the following:

> The foundry identifying mark, heat number, and dates shall be cast on the inside of the manhole frames, and on the bottom of the cover. Foreign made or imported manhole frames and covers shall have the country of origin cast on the top, and be in compliance with Federal regulations. The castings shall be free from cracks, blowholes, or other imperfections, straight true to pattern, and have a uniform finish. The cover shall fit firmly into the frame without rocking, with the frame placed so that the cover is flush with the finished paving. Cover shall be cast with the letter "D" for storm drain, "S" for sewers, or the agency identification that owns the facility in accordance with the agency's standard, requiring lettering or identification on the top of the cover.

Manhole frames and covers shall be of the minimum weight as shown on the Riverside County Flood Control and Water Conservation District Standard Drawing Number MH.255, and the weight of each frame and cover shall be indicated thereon in white paint.

Revise the fourth paragraph of Subsection 206-3.1, "General," of the Standard Specifications to read as follows:

> All castings shall conform to ASTM A-48, Class 35B (proof load test 28,600 pounds minimum), for non-traffic loads such as catch basins, undersidewalk drains, and A-48, Class 35B or better (proof load test 40,700 pounds minimum), for traffic loads and all other locations unless stated otherwise on the Plan.
>
> Manhole frames and covers shall be tested in accordance with Test Method B of Subsection 206-3.2, "Testing Requirements" of the Standard Specifications. Test results and Certification shall be received by the engineer and approved prior to the installation of any castings.

Add to Subsection 206-3.3, "Manhole Frame and Cover Sets," of the Standard Specifications the following:

> The castings for manholes in streets and in non-paved surfaces shall be thoroughly cleaned and coated with asphaltic paint. Castings to be installed in Portland Cement Concrete shall be galvanized.

Construction of concrete drainage structures shall conform to the detail shown on City Standard Plans, APWA, and RCFC & WCD Standard Plans. Also, construction material and application details shall conform to Sections 201, 303-1 and 306 of the Standard Specifications.

The contract unit price paid per each structure shall include full compensation for all labor, tools, materials, equipment, and incidentals, including but not limited to reinforcing steel, manhole frames and covers, grates, earthwork (excavation and backfill) and weepholes, and for doing all the work involved in constructing miscellaneous concrete structures, and no separate or additional compensation shall be allowed therefore.

The contract unit price paid per each (EA) for "Construct Catch Basin No. 4 with Local Depression (W=6.4')" includes full compensation for furnishing all labor, materials, tools, equipment, castings and incidentals, and for doing all the work involved in constructing catch basin, complete in place, including local depressions as shown on the plans, as specified in the Standard Specifications and these special provisions, and as directed by the Engineer and no additional compensation shall be made therefore.

The contract unit price paid per each (EA) for "Construct Catch Basin No. 4 with Local Depression (W=13.3')" includes full compensation for furnishing all labor, materials, tools, equipment, castings and incidentals, and for doing all the work involved in constructing catch basin, complete in place, including local depressions as shown on the plans, as specified in the Standard Specifications and these special provisions, and as directed by the Engineer and no additional compensation shall be made therefore.

The contract unit price paid per each (EA) for "Construct Catch Basin No. 1 with Local Depression (W=14')" includes full compensation for furnishing all labor, materials, tools, equipment, castings and incidentals, and for doing all the work involved in constructing catch basin, complete in place, including local depressions as shown on the plans, as specified in the Standard Specifications and these special provisions, and as directed by the Engineer and no additional compensation shall be made therefore.

The contract unit price paid per each (EA) for "Construct Catch Basin No. 1 with Local Depression (W=21)" includes full compensation for furnishing all labor, materials, tools, equipment, castings and incidentals, and for doing all the work involved in constructing catch basin, complete in place, including local depressions as shown on the plans, as specified in the Standard Specifications and these special provisions, and as directed by the Engineer and no additional compensation shall be made therefore.

The contract unit price paid per each (EA) for "Construct Manhole No. 1" includes full compensation for furnishing all labor, materials, tools, equipment, castings and incidentals, and for doing all the work involved in constructing manhole, complete in place as shown on the

plans, as specified in the Standard Specifications and these special provisions, and as directed by the Engineer and no additional compensation shall be made therefore.

The contract unit price paid per each (EA) for "Construct Concrete Collar" includes full compensation for furnishing all labor, materials, tools, equipment, and incidentals, and for doing all the work involved in constructing concrete collar, complete in place as shown on the plans, as specified in the Standard Specifications and these special provisions, and as directed by the Engineer and no additional compensation shall be made therefore.

The contract unit price paid per each (EA) for "Construct Junction Structure No. 4" includes full compensation for furnishing all labor, materials, tools, equipment, castings and incidentals, and for doing all the work involved in constructing junction structure, complete in place as shown on the plans, as specified in the Standard Specifications and these special provisions, and as directed by the Engineer and no additional compensation shall be made therefore.

The contract unit price paid per each (EA) for "Construct Transition Structure No. 3" includes full compensation for furnishing all labor, materials, tools, equipment, castings and incidentals, and for doing all the work involved in constructing transition structure, complete in place as shown on the plans, as specified in the Standard Specifications and these special provisions, and as directed by the Engineer and no additional compensation shall be made therefore.

The contract unit price paid per linear foot (LF) for "Construct Concrete Blanket" includes full compensation for furnishing all labor, materials, tools, equipment and incidentals, and for doing all the work involved in constructing concrete blanket, complete in place as shown on the plans, as specified in the Standard Specifications and these special provisions, and as directed by the Engineer and no additional compensation shall be made therefore.

The contract unit price paid per each (EA) for "Cap Existing Drainage Inlet" includes full compensation for furnishing all labor, materials, tools, equipment and incidentals, removal of existing pipe and inlet and for doing all the work involved in constructing drainage inlet cap, complete in place as shown on the plans, as specified in the Standard Specifications and these special provisions, and as directed by the Engineer and no additional compensation shall be made therefore.

RECONSTRUCT STORM DRAIN MANHOLE SHAFT (BID ITEM NO. 66)

Sewer manholes shall be reconstructed in accordance with the latest revision of Eastern Municipal Water District's (EMWD) Standards and Specifications for Sewer System Construction, Sections 15340 and 03300, and Standard Drawing No. SB-53.

Storm Drain Manholes shall be reconstructed in accordance with the latest revision of Riverside County Flood Control and Water Conservation District's (RCFC & WCD) Standards and Specifications for Storm Drains.

Manholes shall be reconstructed by either removing the existing cone and replacing with a new cone or removing precast concrete sections from the shaft and reinstalling the existing cone. The top of the cone shall be 150 mm (0.5 ft.) minimum, to 460 mm (1.5 ft.) maximum below the finished surface.

Backfill around manholes shall be compacted to 90% relative compaction from 300 mm (1 ft.) above the top of pipe.

The contract unit price paid per each (EA) "Reconstruct Storm Drain Manhole Shaft" include full compensation for furnishing all labor, materials (including but not limited to shafts, cones, rings, steps, frames, and covers), backfilling, tools, equipment and incidentals, and for doing all the work involved and as directed by the Engineer, and no additional compensation will be allowed.

FURNISH AND INSTALL PVC DRAINAGE PIPE (BID ITEM NO. 67)

PVC Drainage pipe shall conform to Section 207-17 of the Standard Specifications, these Special Provisions and as approved by the Engineer.

The contract unit price paid per linear foot (LF) for "Furnish and Install PVC Drainage Pipe" shall include full compensation for furnishing all labor, materials, tools, equipment, and incidentals, and for doing all the work involved, and no additional compensation shall be made therefore.

ADJUST STORM DRAIN AND SEWER MANHOLE RING AND COVER, SEWER MANHOLE COVER, AND WATER VALVE (BID ITEM NOS. 68, 69, 91, 92, 104, 105, 114, AND 115)

Adjustment of storm drain/sewer manhole covers to grade shall be in accordance with Subsection 301-1.6, "Adjustment of Manhole Frame and Cover Sets to Grade," of the Standard Specifications and the agency or utility that owns or has control of the manhole.

For all new manhole rings and covers furnished by the Contractor, certification shall include the test results from test Method B as called for in Subsection 206-3 "Gray Iron Castings," of the Standard Specifications.

Raised manhole rings and covers shall have a Type II barricade with a flashing light placed over each manhole until it is paved unless temporary paving was provided to provide a smooth driving surface.

Backfill around manholes shall be compacted to 90% relative compaction from 300 mm (1 ft.) above the top of pipe.

Manholes shall be adjusted to grade by removing the existing concrete rings or replacing the existing rings with new rings. The top of the cone shall be 150 mm (0.5 ft.) minimum, to 460 mm (1.5 ft.) maximum below the finished surface.

After the pavement has been completed, the necessary portions of the subgrade, base, and pavement shall be neatly removed, the structure built-up, and the manhole frame set to be backfilled with PCC concrete and Type III-C3-AR-4000 asphalt concrete. The asphalt concrete shall be placed and compacted in a workmanlike manner to conform to the appearance of the surrounding pavement. The asphalt concrete shall be placed within two (2) days after the manhole ring and cover has been adjusted to final grade, unless otherwise approved by the Engineer. The Contractor shall so schedule this work that adjusted manholes and rings shall not remain unpaved over holidays and weekends.

All new and existing water valve and gas valve covers shall be adjusted to grade during paving. The Contractor shall furnish all slip sleeves or cans where none exist. The Contractor shall loosen all valve covers immediately after paving. The Contractor shall paint all domestic water valve covers blue and recycled water valve covers purple per Eastern Municipal Water District standards.

Contractor shall contact Eastern Municipal Water District to schedule inspection three days prior to adjustment to grade of EMWD facilities. Storm Drain Manholes shall be adjusted to grade in accordance with the latest revision of Riverside County Flood Control and Water Conservation District's (RCFC & WCD) Standards and Specifications for Storm Drains.

The contract unit price paid per each (EA) for "Adjust Manhole to Grade" and "Adjust Water Valve to Grade shall be in accordance with Subsection 301-1.7, "Payment," of the Standard Specifications, and shall include full compensation for furnishing all labor, materials, tools, and equipment, and for doing all the work involved in adjusting water valve covers, storm drain manholes, and sewer manholes to finished grade, complete in place, and no additional compensation will be allowed therefore.

ADJUST WATER METER BOX TO GRADE (BID ITEM NO. 70)

Existing domestic water meter boxes and pull boxes shall be adjusted to finish grade in accordance with these Special Provisions and as approved by the Engineer.

This work shall be limited to the raising, lowering, or lateral relocation of existing water meter boxes to the extent possible without relocating the water meter. Any broken, cracked, or otherwise damaged box and cover shall be replaced by the Contractor. New water meter boxes and covers shall be obtained from Eastern Municipal Water District (EMWD) at no cost to the Contractor. The Contractor shall make provisions to obtain the boxes and covers from EMWD.

The contract unit price paid per each (EA) for "Adjust Water Meter Box to Grade" shall be considered to include full compensation for furnishing all labor, materials, tools, equipment, and incidentals required to adjust water meter boxes as shown on the plans, as specified in these special provisions; as approved by the Engineer and no additional compensation shall be allowed therefore.

ADJUST ELECTRICAL BOX TO GRADE (BID ITEM NO. 71)

Existing electrical pull boxes shall be adjusted to finish grade in accordance with these Special Provisions and as approved by the Engineer.

This work shall be limited to the raising, lowering, or lateral relocation of existing electrical pull boxes to the extent possible without relocating the electrical facilities. Any broken, cracked, or otherwise damaged box and cover shall be replaced by the Contractor.

The contract unit price paid per each (EA) for "Adjust Electrical Box to Grade" shall be considered to include full compensation for furnishing all labor, materials, tools, equipment, and incidentals required to adjust electrical pull boxes as shown on the plans, as specified in these special provisions; as approved by the Engineer and no additional compensation shall be allowed therefore.

RELOCATE SANITARY SEWER CLEANOUT (BID ITEM NO. 72)

Relocation of sewer appurtenances shall be in accordance with Eastern Municipal Water District Engineering (EMWD) Engineering Standards, Specifications, and Drawings. The Contractor shall perform required testing and coordinate inspections of relocated appurtenances with Eastern Municipal Water District.

The contract unit price per each (EA) for "Relocate Sanitary Sewer Cleanout" shall include full compensation for furnishing all labor, materials, inclusive of valves, fittings, appurtenances, thrust blocks and connection to existing facilities, tools, equipment, sanitizing and testing and for doing all the work involved in relocating the sewer appurtenances, complete in place. No additional compensation will be allowed therefore.

REMOVE AND INSTALL NEW MAILBOX (BID ITEM NO. 73)

This work shall include the temporary location and protection of existing mailboxes mounted on various types of posts; the installation of new mailboxes mounted on new wood posts; the removal of existing mailboxes; and the procurement and installation of cluster mailboxes.

Existing mailboxes may be temporarily relocated by the Contractor for the convenience of construction operations, but shall remain upright, visible, and readily accessible by residents and postal carriers at all times during construction operations to ensure continuous mail delivery. Mailboxes shall not be located in the roadway at any time. The method used by the Contractor for the temporary relocation and protection of existing mailboxes shall be approved by the Engineer. Existing mailboxes shown on the Plans to be removed shall not be removed prior to the installation of new mailboxes. Any existing or new mailboxes that are damaged, lost, or stolen during construction operations shall be repaired or replaced at the Contractor's expense.

New mailboxes shall be mounted on new 4 in x 4 in treated wood posts. Redwood posts shall be select heart grade and shall conform to the requirements of Section 204, "Lumber and Treatment with Preservatives" of the Standard Specifications. **The wood shall be primed and painted white with outdoor latex paint prior to installation.** The Contractor shall replace existing large mailboxes with new large mailboxes.

Newspaper boxes attached to existing mailbox posts shall be removed and fastened to the new mailbox posts and no separate payment will be made therefore.

Single mailbox installation shall be per City of Moreno Valley Standard Plan Number 222. Multiple mailbox installation shall be per City of Moreno Valley Standard Plan Number 223 at locations as indicated in the project plans.

Address numbers shall be placed on the posts and on the mailboxes.

Cluster mailboxes shall be postal-service approved, pedestal-mounted, front-loading mailboxes. Contractor shall submit product information for approval prior to purchase or installation of cluster mailboxes. Mounting pedestals shall be installed in accordance with the vendors recommended installation procedure.

Full compensation for disposing of existing posts and mounts, temporary relocation, protection, moving and maintaining the boxes regardless of the number of moves required, shall be considered as included in the contract unit price paid for each mailbox post or cluster mailboxes, and no additional compensation will be allowed therefore.

The estimated quantity shown on the Bid Schedule for Mailbox or Cluster Mailbox Installation is for each mailbox post or cluster mailbox, and includes one or two mailboxes and newspaper boxes mounted on each post, depending on location, or cluster mailbox with post and pad.

Full compensation for furnishing all labor, tools, equipment and materials including, but not limited to, new mail boxes with addresses, new posts, planning, paint, hardware, sand, PCC patch and incidentals, shall be considered as included in the contract unit price paid per each mailbox post installed in place, and no additional compensation will be allowed therefore.

The contract unit price paid per each (EA) for "Remove and Install New Mailbox" shall include full compensation for furnishing all labor, tools, equipment and materials including, but not limited to, new mail boxes with addresses, new posts, planning, paint, hardware, sand, PCC patch and incidentals, shall be considered as included in the contract unit price paid per each mailbox post installed in place, and no additional compensation will be allowed therefore.

PLANT STREET TREE PER CITY LANDSCAPING STANDARD (BID ITEM NO. 74)

Trees to be planted shall conform to the provisions of the City of Moreno Valley's "Landscape Development Guidelines and Specifications," and these Special Provisions.

Trees shall be planted at 25011 Fran Lou Drive at locations indicated on the plans.

Tree(s) to be planted shall be of "Liriodendron tulipifera" (Tulip Tree) and shall be a minimum of 24" box, with a trunk caliper of 1.75" measured at 12" above the root ball. The size of the tree canopy shall be a minimum of 4'-0" and in proportion with the size of the trunk.

All trees shall be certified free and clear of any arboreal disease(s), destructive insects, mold, slime, rust, or any other unhealthy tree conditions by the supplier or grower.

Deep root barriers shall be used for all tress planted less than 1.5 M (5') from street improvements to reduce root damage to curbs, sidewalks, and approaches. Root barriers shall be installed per Manufacturer's Specifications.

Planting of Trees

a. Trees shall be located behind the public right-of-way, or as directed by the Engineer, with approval secured before excavating pits, and making necessary adjustments as indicated. Refer to City Standard Number 831, of the Landscape Development Guidelines and Specifications.

b. All pits for trees shall be dug square with bottoms level, the length of sides equal to one and one-half (1-1/2) times the diameter of the rootball and 600 mm (2') below the rootball.

Compacted soils at sides and bottoms shall be loosened by scarifying or other approved method. Soil mix for backfill in pits shall be as follows:

0.6 m (2/3 yd) Screened Site Soil
0.3 m (1/3 yd) Nitrolized Wood Shavings
0.45 kg (1 lb) 12-12-12 Commercial Fertilizer
4.5 kg (10 lbs) Ag. Gypsum
0.45 kg (1 lb) Soil Sulfur
0.9 kg (2 lbs) Iron Sulfate

c. Set trees in center of pit, in a vertical position, so that the crown of the rootball will be level with finish grade after allowing for watering and settling and shall bear the same relationship to the finish grade that it did to the soil surface in the container.

Stake all non-guyed trees at the time of planting by placing a stake(s) in the prepared hole and driving it 300 m (12") into solid ground. Plant the tree as close to the stake as possible without crowding the roots. Fasten the tree to the upper end of the stake in at least two places using detailed ties or braces. Refer to City Standard Plan Number 531.

e. Construct a firmly compact mound of soil around each tree and plant to form a watering basin at the edge of, and following the shape of, the planting pit area. Mounds for trees and vines from 19 liter (5 gallon) or larger containers shall be at least 100 mm (4") high. Mounds for all other trees vines or plants not otherwise specified shall be at least 50 mm (2") high. Excavated earth, if capable of retaining water shall be refilled to the required grade with prepared soil, and additional nitrogen stabilized sawdust worked into the surface as required to restore the mulched condition.

f. Trees occurring in lawns shall be planted before final preparation of those areas.

g. All trees shall be installed with bark protection devices at their crowns. Refer to City Standard Plan Number 531A.

Care of Trees Before and During Planting

Trees shall not be allowed to dry out before or while being planted. Exposed roots shall be kept moist by means of wet sawdust, peat moss, or burlap, at all times during planting operations. Roots shall not be exposed to the air except while being placed in the ground. Wilted trees in or out of containers will not be accepted and shall be replaced at the Contractor's expense.

The Contractor shall maintain all trees for a period of thirty (30) calendar days following completion of planting. Said maintenance shall include but not is limited to, irrigation, feeding and staking in compliance with written instructions ordered by the Engineer.

The Contract price paid per each (EA) for "Plant Street Tree per City Landscaping Standard" shall include full compensation for furnishing trees, all labor, materials, tools, equipment and incidentals, and for doing all the work involved in planting new/replacement trees, complete in place, as shown on the Plans as specified in the Standard Specifications and these Technical Provisions, and as directed by the Engineer and no further compensation will be allowed therefore.

TRAFFIC SIGNAL IMPROVEMENTS (BID ITEM NOS. 75, 76, 77, 93, AND 106)

Furnishing and installing traffic signal equipment, highway lighting systems, interconnect conduit, and payment therefor shall conform to the May 2006 edition of provisions in Section 86, "Signals and Lighting", of the State of California Department of Transportation's Standard Specifications, May 2006 Edition of the State of California Department of Transportation's Standard Plans, where applicable, and these Technical Provisions.

Pursuant to Public Contract Code Section 3400(b) the City of Moreno Valley may make a finding that designates certain materials, products, things, or services by specific brand or trade name for statutorily enumerated purposes. As required by Section 3400(b) the City of Moreno Valley has made such findings as further described in these Special Provisions.

Description:

Subsection 86-1.01, "Description" of the State Standard Specifications shall include the following:

A Certificate of Compliance shall be submitted by the manufacturer for the following:

1. Bar Reinforcement
2. Anchor Bolts, Anchor Bars or Studs
3. Each type of Conductor or Signal Cable
4. Poles and Arms
5. Electrical Service Cabinet and Equipment
6. Traffic Signal Cabinet and Equipment
7. Electrolier

The certificate shall be signed by the manufacturer of the material or the manufacturer of assembled materials and shall state that the materials involve comply in all respects with the requirements of the specifications. A Certificate of Compliance shall be furnished with each lot of material delivered to the work and the lot so certified shall be clearly identified in the certificate.

All materials used on the basis of a Certificate of Compliance may be sampled and tested at any time. The fact that material is used on the basis of a Certificate of Compliance shall not relieve the Contractor of responsibility for incorporating material in the work which conforms to the requirements of the plans and specifications and any material not conforming to the requirements will be subject to rejection whether in place or not.

The City reserves the right to refuse to permit the use of material on the basis of a Certificate of Compliance.

A Certificate of Compliance will not be required if the City furnishes the material.

Cost Break-Down

Subsection 86-1.03,"Cost Break-Down," of the State Standard Specifications shall include the following:

Any reference to any part or all of Section 4, "Scope of Work" of the State Standard Specifications shall be deemed revised to refer to Section 3, "Changes in Work" of the General Provisions and the Standard Specification.

Equipment List and Drawings:

Subsection 86-1.04, "Equipment List and Drawings," of the State Standard Specifications shall include the following:

The City will furnish the Type III-CF service equipment enclosure with battery backup and the Model 170 (or similar) controller assembly in Type 333 cabinet, along with cabinet schematics and maintenance manuals.

Scheduling of Work:

Revise Subsection 86-1.07, "Scheduling of Work," of the State Standard Specifications to include the following:

The Contractor shall pothole all standard (pole) foundation locations within five (5) working days after the date of the "Notice to Pothole Pole Foundation Locations." All foundation locations shall be potholed before the "Notice to Proceed with Order of Material" is issued.

The Contractor shall place the order for material within five (5) working days after the date of the "Notice to Proceed with Order of Material" and provide the City with proof of the order and manufacturer's tentative delivery schedule (on the manufacturer's letterhead) within five (5) working days of the order.

The Contractor shall notify the City in writing thirty (30) calendar days prior to the scheduled delivery of material and submit a revised construction schedule prior to the City issuing a "Notice to Proceed with Construction". The City will issue the "Notice to Proceed with Construction" after receiving the 30-day notification and approving the construction schedule.

Once the Notice to Proceed is issued, the Contractor shall perform uninterrupted subsurface and surface work consisting of, but not limited to, the installation of conduit, foundations, loop detectors, and sidewalk prior to receipt of all above ground electrical material and equipment.

Above ground signal work shall not commence until such time all the electrical material and equipment are received by the Contractor.

Traffic signal poles shall not be installed until the electrical service has been energized, and electrical meters installed, and all street improvements are completed per approved plans.

No material or equipment shall be stored at the job sites. The job sites shall be maintained in neat and orderly condition at all times, with allowance for pedestrian access.

Excavating and Backfilling:

The second paragraph of Subsection 86-2.01, "Excavating and Backfilling," of the State Standard Specifications are deemed revised to read as follows:

All surplus excavated material shall be removed and disposed of the same day removal occurs, stockpiling of removal on the City right of way is not allowed.

Omit the first sentence of the third paragraph of Subsection 86-2.01.

Removing and Replacing Improvements

Add to Subsection 86-2.02, "Removing and Replacing Improvements," of the State Standard Specifications with the following:

All curb and gutter, cross gutters, and spandrels shall be replaced within four (4) working days after removal. AC patch shall be placed within two (2) working days after the curb and gutter, cross gutters, and spandrels are replaced.

All sidewalks shall be replaced within fifteen working days after removal associated with traffic signal work only.

Foundations:

The first paragraph of Subsection 86-2.03, "Foundations," of the State Standard Specifications shall be deemed revised to read as follows:

Portland Cement Concrete (PCC) shall be 330-C-23 (560-C-3250) in Subsection 201-1.2 "Concrete Specified by Class of the State Standard Specifications."

Concrete for each cast-in-place pile and foundation shall be placed continuously and the Contractor will not be allowed to commence work on any integral part unless sufficient material for the concrete is on hand, and the Contractor's forces and equipment are sufficient to complete the part without interruption in the placing of the concrete.

Joints in the concrete due to stopping work are not allowed. If the Contractor has insufficient concrete on hand and a cold joint will occur or does occur, the cast-in-place pile or foundation shall be removed. Concrete for a new cast-in-place pile or foundation

shall then be placed at the expense of the Contractor. Concrete shall be placed and consolidated by methods that will not cause segregation of the aggregates and will result in a dense homogeneous concrete which is free of voids and rock pockets. All concrete shall be placed while fresh and before it has taken an initial set. Retempering any partially hardened concrete with additional water will not be permitted.

Forms and subgrade shall be thoroughly moistened with water immediately before placing concrete.

Concrete shall be placed as nearly as possible in its final position and the use of vibrators for extensive shifting of the mass of fresh concrete will not be permitted. Fresh concrete shall not be permitted to fall from a height greater than 8 ft without the use of adjustable length pipes, tubes or double belting placed to prevent segregation of the concrete unless the flow of concrete is directed into the center of the hole using a hopper and not allowed to strike the reinforcement, reinforced bracing and other objects in the hole. Concrete in cast-in-place piles or foundation shall be placed such that the concrete does not strike the reinforcement, reinforced bracing, conduit, and by means not to cause segregation. Double belting shall not be used unless the thickness of the member is less than 16 inches.

All concrete shall be consolidated by means of high frequency internal vibrators within 15 minutes after it is deposited in the forms. Concrete filling for cast-in-place concrete piles shall be vibrated in the upper 16.5 ft of the pile. The vibrators shall not be attached to or held against the forms or the reinforcing steel. The vibrating shall be done with care and in such manner that displacement of reinforcement, conduit and anchor bolts is avoided.

Vibrators used to consolidate concrete containing epoxy-coated bar reinforcement shall have a resilient covering to prevent damage to the reinforcement.

When concrete is inaccessible for adequate consolidation by other means, external vibrators shall be used and the forms shall be sufficiently rigid to resist displacement or damage.

Only concrete that is designated as seal course concrete may be placed under water.

All newly placed concrete of the temporarily exposed surfaces of the cast-in-place concrete piles, foundations, and other structures shall be properly cured.

The fifth paragraph of Subsection 86-2.03, "Foundations," of the State Standard Specifications shall be deemed revised to read as follows:

Cast-in-place concrete piles and foundations shall be constructed so that the excavation methods and the concrete placement procedures shall provide for placing the concrete against undisturbed material in a dry or dewatered hole.

All holes shall be examined for straightness and the axis of the hole shall not deviate from plumb more than 0.45 ft per 10 ft of length.

Care shall be taken during excavation to prevent disturbing the foundation material surrounding the pile. Equipment or methods used for excavating holes shall not cause quick soil conditions or cause scouring or caving of the hole. After excavation is begun, the pile shall be constructed expeditiously in order to prevent deterioration of the surrounding foundation material from air slaking or from the presence of water. Deteriorated foundation material, including material that has softened, swollen or degraded, shall be removed from the sides and the bottom of the hole and shall be disposed of. The bottom of the drilled holes shall be cleaned just before placing reinforcement or concrete to remove any loose sand, gravel, dirt, and drill cuttings.

After placing reinforcement and prior to placing concrete in the drilled hole, if caving occurs or deteriorated foundation material accumulates on the bottom of the hole, as determined by the Engineer, the reinforcement shall be removed and the bottom of the drilled hole cleaned.

Water that has infiltrated the hole shall be removed before placing concrete therein. Flow or drainage water shall not be permitted to enter the hole.

Temporary steel casings shall be furnished and placed tight in the hole where shown on the plans and where necessary to control water or to prevent quick soil conditions or caving of the hole. Temporary casing shall be watertight and of sufficient strength to withstand the loads from installation, removal, lateral concrete pressures and earth pressures. The casing shall be non-corrugated and the surfaces shall be smooth, clean and free from hardened concrete. The casing shall be removed while the concrete is being placed. In a dewatered hole the concrete in the casing shall be maintained at a level at least 5 ft above the bottom of the casing or at a level above the bottom of the casing adequate to prevent displacement of the concrete by material from outside the casing, whichever is greater. Separation of the concrete during casing withdrawal operations shall be avoided by hammering on or otherwise vibrating the casing. The withdrawal of casings shall not leave voids or cause contamination of the concrete with soil or other materials.

Portions of the holes may be enlarged, backfilled with slurry cement backfill, concrete, or other material, and redrilled to the specified diameter to control caving. Backfill material at enlarged piles shall be chemically compatible with concrete and steel, shall be drillable, and shall have the necessary strength required for the conditions.

The reinforcement shall be placed and secured symmetrically about the axis of the pile and shall be securely blocked to clear the sides of the hole.

Reinforcement for cast-in-place concrete piling with increased diameters and revised tip elevations shall conform to the following:

The size and number of the reinforcing bars, the percentage of bars required to extend to the pile tip, and the size and pitch of the spiral reinforcement shall conform to the details shown on the plans for the original piles.

The required length of the spiral reinforcement and of any reinforcing bars which do not extend to the pile tip shall be that length which would have been required for the original specified or ordered tip elevation.

The diameter of the spiral reinforcement shall either remain the same as required for the original pile or be increased to provide not less than the concrete cover required for the original pile. Positive means shall be provided to ensure that the reinforcement is centered in the pile.

The Contractor shall not commence drilling holes if reinforcement for the cast-in-place concrete piling is not on the job site.

The Contractor shall not drill more holes in the same day than can be filled with concrete. If a hole is not filled in the same day it is drilled, it will be the Contractor's responsibility to use whatever means to prevent any entry into the exposed hole, such as covering, barricading, fencing, etc. The Contractor shall not drill additional holes until the previous days holes are filled - unless permission is given by the engineer.

The seventh paragraph of Subsection 86-2.03, "Foundations," of the State Standard Specifications shall be deemed revised to include the following:

Anchor bolts circle pattern shall be checked immediately after placement of concrete. The Contractor will not be allowed to adjust any bolts after the concrete is set. If the anchor bolts are in the wrong location, then the foundation shall be removed and replaced at no additional expense to the City.

Standards, Steel Pedestals, and Posts:

Subsection 86-2.04, "Standards, Steel Pedestals, and Posts," of the State Standard Specifications shall be deemed revised to include the following:

The galvanizing or zinc coating shall adhere tenaciously to the surface of the base material. The finished product shall be free from blisters and excess zinc, and the coating shall be even, smooth, and uniform throughout. Machine work, die work, cutting, punching, bending, welding, drilling, thread cutting, straightening, and other fabricating shall be done as far as is practicable before the galvanizing. All members, nuts, bolts, washers, etc., shall be galvanized before a structural unit is assembled. All uncoated spots or damaged coatings shall be cause for rejection.

Products that are warped or distorted to the extent of impairment for the use intended shall be rejected.

Test coupons for determining the quantity and quality of the galvanizing shall be of such size and shall be wired to the materials to be galvanized before immersion so as to represent the amount of coating deposited on the finished product.

The sign mounting hardware, as shown on Standard Plans ES-7N (Detail U) and RS, shall be installed at locations shown on the plans.

Where the plans refer to the side tenon detail at the end of the signal mast arm, the applicable tip tenon may be substituted.

All standards shall have a 110 volt single weatherproof electrical outlet and shall be installed on the standard just above the signal mast arm. Twelve-gauge wire shall be installed directly from the outlets into the service cabinet with in-line fuse and Section 86-2.095 "Fused Splice Connectors," of the State Standard Specifications separate breaker and 20 amp receptacles.

All new poles shall be manufactured with a dedicated mast arm and simplex for IISNS as shown on City Standard Plan 419B.

Standards (poles) shall not be placed on foundations until five (5) working days before scheduled turn on.

Conduit:

Subsection 86-2.05, "Conduit," of the State Standard Specifications and shall be deemed revised to include the following:

All conduit shall be galvanized rigid steel unless otherwise noted on the Plans.

Conduit not specified shall be 2-in, Type I.

Subsection 86-2.05A, "Material," of the State Standard Specifications, "The Material of Choice," shall be deemed to be as follows:

All conduit shall be Type 1 Hot-Dip Galvanized Rigid Steel unless otherwise stated or shown on the plans.

Subsection 86-2.05C, "Installation," of the State Standard Specifications shall be deemed revised to include the following:

All conduit shall be placed by jacking or drilling methods unless otherwise noted on the Plans. The rigid metal conduit to be used as a jacking or drilling rod shall be fitted with suitable drill bits for the required hole size. In the event jacking or drilling is not possible, and with the approval of the engineer, the Contractor may use the trenching in pavement method. Wherever pavement or sidewalk is removed, the Contractor at his/her option is allowed to trench and lay the conduit. Trenches will not be allowed to remain open overnight or on the weekends.

When the "Trenching in Pavement Method" is used for street crossings, the conduit is to be placed at a minimum depth of 36 inches. All excavations or trenching in the street for the purpose of installing electrical equipment shall be backfilled with trench backfill slurry 100-E-100 (60-E-.7) of the Standard Specifications, remaining 0.30 ft below the pavement surface. Temporary trench resurfacing shall be placed the same day using D2-SC800 AC. The temporary trench resurfacing must be replaced with permanent AC patch Type 111-D-AR4000 within five working days.

Insulated bonding bushings will be required on metal conduits. When a standard coupling cannot be used for coupling metal type conduit, a UL or ETL listed threaded "Ericsson" type union coupling shall be used. All couplings for metal type conduit shall be tightened to provide a good electrical connection throughout the entire length of the conduit run. After conductors have been installed, the ends of the conduits terminating in pull boxes and controller cabinets shall be sealed with an approved type sealing compound.

Pull Boxes:

Subsection 86-2.06, "Pull Boxes," of the State Standard Specifications shall be deemed revised to include the following:

Pull boxes, pull box covers, and pull box extensions shall be concrete. Pull box covers shall be steel where specified on the plans.

A minimum of 12 inches of gravel or crushed rock shall be placed in the bottom of all pull boxes.

The top of conduit shall have a clearance 8 inches from the bottom of the pull box cover.

All pull boxes shall be # 6 unless shown otherwise.

Standard Plan Drawing ES-8, "Electrical Systems," (Pull Box Details), Note 4 shall be modified as follows:

The words "Traffic Signal" shall replace "CALTRANS" on lids of pull boxes.

Conductors:

The fourth paragraph of subsection 86-2.08, "Conductors," of the State Standard Specifications shall be deemed revised to read as follows:

A Certificate of Compliance shall be furnished prior to the use of any materials by the Manufacturer which includes each type of cable to be used. The certificate shall be signed by the manufacturer of the material or the manufacturer of assembled materials and shall state that the materials involved comply in all respects with the requirements of the specifications. A Certificate of Compliance shall be furnished with each lot of material delivered to the work and the lot so certified shall be clearly identified in the certificate.

All materials used on the basis of a Certificate of Compliance may be sampled and tested at any time. The fact that material is used on the basis of a Certificate of Compliance shall not relieve the Contractor of responsibility for incorporating material in the work which conforms to the requirements of the plans and specifications and any material not conforming to the requirements will be subject to rejection whether in place or not.

The City reserves the right to refuse to permit the use of material on the basis of a Certificate of Compliance.

Subsection 86-2.08B, "Multiple Circuit Conductors," of the State Standard Specifications shall be deemed revised to include the following:

Insulation shall be type THW Polyvinyl Chloride for traffic signal lights.

Wiring:

Subparagraph 5 of the first paragraph of Subsection 86-2.09D, "Splicing and Terminations," of the State Standard Specifications, shall be deemed to be replaced with the following:

Conductors No. 10 AWG, or larger, shall be spliced by the use of "C" shaped compression connectors as shown in the State Standard Plans ES-13A, "Signal, Lighting, and Electrical Systems Splicing Details."

The first sentence of the tenth paragraph of Subsection 86-2.09E, "Splice Insulation," of the State Standard Specifications shall be deemed to be revised as follows:

All splices shall be insulated by "Method B" of the State Standard Plan ES-13A, "Signal, Lighting, and Electrical Systems Splicing Details" except for detector circuits.

Bonding and Grounding:

The first sentence of the second paragraph of Subsection 86-2.10, "Bonding and Grounding," of the State Standard Specifications shall be deemed revised to read as follows:

The bonding jumper in signal standards or the controller pedestal shall be attached by a 3/16 inch or larger, brass bolt and shall be run to the conduit, ground rod, or bonding wire in adjacent pull box.

A ground rod shall be required in the Controller and Service foundations.

Type III CF Service:

Subsection 86-2.11, "Service," of the State Standard Specifications shall be deemed revised to include the following:

The City will purchase and test the Type III-CF Model No. MEUG 35-PBD service equipment. The Contractor is to make arrangements to obtain the Type III-CF Model No. MEUG 35-PBD service equipment from:

Moreno Valley City Yard
15670 Perris Boulevard
Moreno Valley, CA 92388
951.413.3162

The Contractor, before receiving the service equipment, is to verify that the equipment has been tested and is in working order. The Contractor will be responsible for any damage and repair to the service equipment once it is in the Contractor's possession until accepted by the City.

The Contractor shall permanently install the service pedestal address on the pedestal in the manner required by Southern California Edison Corp.

Payment for pickup, transporting, installing, repair and field testing of the Type III-CF Model No. MEUG 35-PBD service equipment is included in the lump sum price for traffic signal improvements or separate bid item if so designated and no additional compensation will be allowed therefor.

The City will supply a Type III-CF Model No. MEUG 35-PBD dual side-by-side meter service equipment enclosure with a (5) five clip meter socket and test blocks for each meter. The service equipment enclosure color will be white – inside and out. The service equipment enclosure will be in accordance with State Standard Plan ES-2F, "Signal, Lighting, and Electrical Systems Service Equipment and Typical Wiring Diagram, Type C," and will include Type III lighting controls with one power transfer switch, one Powerback 2000 UPS, and four 65 amp maintenance free batteries.

Testing

The first paragraph of Subsection 86-2.14A, "Materials Testing," of the State Standard Specifications is deemed revised to read:

Controller units and cabinets will be delivered to the City Yard.

Controller units and cabinet will be tested by the City before being made available for installation by the Contractor.

The fourth paragraph of Subsection 86-2.14C, "Functional Testing," of the State Standard Specifications shall be deemed revised to read as follows:

Functional tests for each lighting system shall consist of not less than fourteen (14) days of continuous satisfactory operation. If unsatisfactory performance of the system develops, the conditions shall be corrected by the manufacturer and the test shall be repeated until the 14 days of continuous, satisfactory operation is obtained. In the event of a malfunction the Contractor shall notify the City. If the Controller is replaced, the contract time will be extended by change order.

Full compensation for field testing and functional tests shall be considered as included in the contract lump sum price paid for traffic signal improvements and no additional compensation will be allowed therefor.

The fifth paragraph of Subsection 86-2.14C, "Functional Testing," of the State Standard Specifications shall be amended to read as follows:

Except for new lighting circuit systems the local agency will maintain the system during the test period and will pay the cost of electrical energy for the operation of all the facilities that are undergoing testing. The cost of any necessary maintenance performed by the local agency, except electrical energy, shall be at the Contractor's expense and will be deducted from any monies due, or to become due the Contractor.

The sixth paragraph of Subsection 86-2.14C, "Functional Testing," of the State Standard Specifications shall be amended to read as follows:

A shutdown of the electrical system resulting from damage caused by public traffic or a power interruption shall constitute discontinuity of the functional test.

Subsection 86-2.14C, "Functional Testing," of the State Standard Specifications shall be deemed to include the following:

A knowledgeable representative for the manufacturer or distributor of the traffic signal control equipment shall be present for the turn-on, and for a reasonable period of time thereafter, as determined by the Engineer.

Controller Assembly

Subsection 86-3, "Controller Assemblies," of the State Standard Specifications shall be revised to include the following:

The City will purchase and test the controller assemblies. The Contractor is to make arrangements to obtain the controller assemblies from:

Moreno Valley City Yard
15670 Perris Boulevard
Moreno Valley, CA 92388
(951) 413-3162

The Contractor, before receiving the controller assemblies, is to verify that the equipment has been tested and is in working order. The Contractor will be responsible for any damage and repair to the controller assembly once it is in the Contractor's possession until accepted by the City.

Payment for pickup, transporting, installing, repair and field testing of the controller assembly is included in the lump sum price for traffic signal improvements or separate bid item if so designated and no additional compensation will be allowed therefor.

The City will provide a Type 333 controller cabinet complete with Model 170 (or similar) traffic signal controller, firmware, load switches, pedestrian and vehicular detector cards, conflict monitor unit, flash transfer relay, flasher, power distribution assembly, and police panel. Emergency vehicle pre-emption equipment is specifically excluded from the list of items to be furnished by the City; see below for the Contractor's duties with respect to the pre-emption system.

The Contractor shall install a Type "P" Foundation as per Caltrans Standard Plan ES-3C and City Standard Plan 423, install the City-furnished 333 cabinet onto the new Type "P" foundation, and provide all tools, equipment, and materials necessary to render the traffic signal system fully operational as shown on the Plans.

The City-supplied controller cabinet will provide the following functions:

MODEL 333 CABINET SECTION 1. GENERAL
The cabinet is designed to house the Controller Unit and standard plug-in modules. The standard cabinet is capable of operating up to eight vehicle phases and four pedestrian phases. With the addition of the Auxiliary Output File, an additional four overlap phases may be added.

The Model 333 cabinet is made up of the following major assemblies:

Housing (Enclosure)
4 Doors (2 Front, 2 Back).
8" Riser ('P' Cabinet Mounting Pattern)
2 Exhaust Fans
Front Police Box
2 Lift Eyes

Controller Rack Assembly
Pull out Drawer/Shelf Assembly
Power Distribution #2
206 Power Supply Module
Input Files I and J
Output File
C1 Harness
Service Panel
Input Panel
Fluorescent Light Fixture with Door Switch, Front and Back

Equipment Rack Assembly
2 Shelves
6 Position Surge Suppressor
Detector Panel for Field Sensor Wiring

The cabinet can accept the following plug-in units:
200/200IO Switch Pack
204 Flasher Unit
210 Monitor Unit
222 Loop Sensor Unit
242 Two Channel DC Isolator
252 Two Channel AC Isolator
430 Heavy Duty Relay

Optional Features Typically Provided In This Configuration
Auxiliary output file provides 6 additional load switch positions for overlaps, etc.
Auto/manual control with police panel cord (City-installed)

Detector and preempt test switch panel
Intersection display panel
External modems
Communication Panel
Cabinet diagnostic kit
Red Monitoring Kit

MODEL 333 CABINET SECTION 1.1 SPECIFICATIONS	
Temperature	-37° C. to + 74° C.
Relative Humidity	0 to 95%
Power	90 to 135 VAC
Conductors	MIL-W-1687D Type B or better
Materials	Aluminum (0.125 thick)
Finishes	Natural, painted, anodized
Dimensions	54" H X 44 1/2" W X 26" D
Mounting	Base mounted, bolt pattern 181/2" X 40 ¾" (4) ¾" X 16" anchor bolts (optional)
Access	2 full size doors, front and back
Ventilation	2 100 CFM fans with thermostat control filtered air intake in front and rear door
Lock System	3 point, choice of Corbin or Best Locks
Handles	Stainless steel with padlock feature
Door Stops	90 and 180° stop, each door, top & bottom (+ 10°)
Rack Assembly	Removable, Standard, 19" EIA Rack, with:
	Controller Shelf
	14-position input files (2)
	12-position output file
	Model PDA-2 Combined Power Supply & Power Distribution
	assembly
	Input panel
	Service panel
	Detector Termination Panel
	Police Panel w/ lights ON/OFF & Auto flash
	2 Fans and Thermostat Assy
Shipping Weight	390 lbs. without plug-ins or Controller

MODEL 333 CABINET SECTION 1.2 THEORY OF OPERATION

CABINET WIRING
The wiring for the Model 333 Cabinet is separated into two categories. Fan, Thermostat and Police Panel control make up the first category. Rack assembly wiring which is separated into AC and DC harnesses makes up the second category.

FANS AND THERMOSTAT ASSEMBLY
The fan and thermostat assembly is attached to the top of the cabinet. The fans, thermostat and fuse assembly are wired to the rack through a 15 pin AMP connector, HJ1 and HP1.

POLICE PANEL AND DOOR SWITCH ASSEMBLY

The signals ON/OFF, AUTO/FLASH and door switches are also wired through the HJ1 and HP1 connectors. The DC FLASH SENSE portion of the FLASH SENSE Switch is wired through four position AMP connectors HJ2 and HP2.

SERVICE PANEL
The Service Panel is located on the right side of the Controller Rack when viewed from the rear. The main AC power connects to the Service Panel at terminal block TBS. A three-electrode gas tube protector and two metal oxide varistors are also connected to terminal block TBS to provide power line surge protection. Other protection devices may be provided depending on the specific needs of the application and geographic area of the cabinet installation. Three devices are commonly used. An EDCO 1210 is frequently used to replace the varistors and gas tube protector for common mode protection. An EDCO 1210 integrated series parallel protector may be installed in the PDA#2 assembly for protection in extreme environments.

The interconnection from TBS is accomplished with #8 gauge wire color coded as follows:

AC+	BLACK
AC-	WHITE
EQUIPMENT GROUND	GREEN

One spare terminal block is provided on the Service Panel for use as a communications interconnect or special termination. This terminal block is labeled TB3. Equipment ground and AC- bus bars are at the bottom of the panel and TB3 is located at the top.

INPUT PANEL
The Input Panel is on the left side of the controller rack when viewed from the rear. The DC ground bus, TB1, and TB3 are located there. The DC ground wire is white with a red stripe, and is physically separated from any of the AC wires.

Terminal block TB1-1 is used for the termination of +24VDC. TB1-2 is used for the termination of the Model Unit Reset. TB2 is provided for use as a communications interconnect or special termination.

DETECTOR PANEL
The Detector Panel is on the lower left side of the Equipment Rack when viewed from the rear. The Detector Panel contains terminal blocks for Termination of Loop Inputs and other wires attached to the I and J Files. It has provisions for eight 12 position terminal blocks and four equipment ground bus bars. See the CALTRANS specifications TSCES-9 for details concerning how these terminal blocks are connected to the input files.

CAGE MOUNTING
The Controller Unit (Model 170E, 170 ATC "Coldfire," 2070 ATC, or similar) installs on two support shelves immediately above the pull out drawer. The Controller front panel is secured to the EIA rails with 10-32 truss screws. The AC power plugs into the Controller Unit receptacle CR1 on the PDA rear panel. C1 and C2 connectors plug into the rear of the Controller Unit.

The C1 Connector connects the Controller outputs to the Output File via C4, and the Auxiliary Output File #2 via C5. The C5 connector may be stored on the PDA#2. The C1 input

connections are wired to the Input Files. C2 terminations are the Modem or RS232 interconnects.

The order of placement in the Mounting Cage is from top to bottom: Controller, Pull out Drawer, Power Distribution Assembly #2, Output File, Input File I, and Input File J.

CONTROL AND POWER DISTRIBUTION OUTLINE
With reference to the Control and Power Distribution Line-To-Line drawing (available upon request), there are three major assemblies that determine the cabinet operation. These are: Power Distribution Assembly #2, Police Panel Switch Assembly (including the door switch), and Output File Assembly.

The Power Distribution Assembly #2 is responsible for the input power and provides a 50 amp Main Circuit Breaker (MCB). The MCB supplies power to the cabinet and controller receptacles, and to the Flasher Bus Circuit Breakers and the Solid State Relay (SSR). The SSR is a normally closed relay rated at 50 amps.

The Flash Bus Circuit Breakers are rated at 20 amps and feed the two Model 204 Flasher Units that provide for alternating signal drives rated at a maximum of 10 amps each to the Output File Assembly.

The SSR provides power to six 15 amp circuit breakers. These Signal Circuit Breakers are wired to the Output File Assembly in sequence as follows:

SCB1	SP1, 2, 2P
SCB2	SP3, 4, 4P
SCB3	SP5, 6, 6P
SCB4	SP7, 8, 8P
SCB5	SP9, 10, 11
SCB6	SP12, 13, 14

The Signal Bus Circuit Breakers are equipped with Auxiliary switches. These switches are wired in parallel, and close when a breaker is tripped, or set in the OFF position. Common input to the switches is attached to the load side of the MCB. The normally closed contact of the switches is wired in common to the SSR coil and Flash Transfer Relay Coils (FTR). When any or all of the Signal Bus Circuit Breakers trip, or are set to the OFF position, the Auxiliary switches supply power to the SSR coil and the FTR relays and cause the cabinet to go into a flashing condition and the Flash indicator lamp will turn on.

The Police Panel switches will interrupt the control wires to the SSR and the FTR coils. When the cabinet is switched to the ON and AUTO positions, the FTR coils are connected to the flash command signals. However, when the cabinet is in the OFF and AUTO positions, this connection is broken and the ON/OFF Switch will supply AC to the SSR coil. When the cabinet is in the ON and Flash position, the FTR coils are connected and AC is supplied to the SSR coil.

Supplying power to the SSR coil removes power to the Signal Bus Circuit Breakers and the Load Switches. Energizing the FTR coils supplies alternate Flashing power to the Field terminals via the FTR contacts and the corresponding red yellow or white program blocks.

The Flash Program Blocks are located inside the rear of the Output File Assembly. The FTR relays are found in the front left hand side of the same unit.

Protection is provided against the ability to normally operate a Model 333 Cabinet without a Model 210 Monitor Unit installed through the use of a normally open switch located in the corner of the front door. When the front door is closed and the Model 210 Monitor Unit is installed and operational, the LR DC relay is energized by the presence of +24 VDC, with edge connector interlock pins 24 and 25 providing a ground path. The LR relay is located on the lower left hand side of the Output File. The normally closed contact of the LR relay will be held open when this relay is energized. If the Model 210 Monitor Unit is removed and the door closed, the LR relay de-energizes and the contacts close, providing a path for AC from the door switch to pass to the SSR coil and FTR coils, placing the intersection in flashing operation.

When the Model 210 Monitor Unit senses fault, whether it be conflicting field output circuits, WDT time-out condition, or improper DC Power Supply voltage, AC power is switched to the SSR coils and FTR coils via pins 28 and EE of the Monitor Unit edge connector. This energizes the Flash Sense isolation Relay (IR) and Flash Transfer Relay and provides a DC ground to 114-D. When a DC isolator is installed in slot 14 of the I Input File, it provides the Controller with a Flash Sense input.

Monitor Stop Time is provided by the Monitor Unit via the Output File to I14-J as well as providing Stop Time input to the Controller.

Stop Time may be initiated when selecting the Flash position on the Police Panel via the contacts of the FLASH/AUTO Switch. A ground is placed on pin I14-J.

MODEL 333 CABINET SECTION 2 POWER DISTRIBUTION ASSEMBLY #2

INTRODUCTION
The major components of the Power Distribution Assembly (PDA2) are a Model 206 Power Supply Module, Model 204 Flasher Unit, Model 430 heavy duty Relays, Solid State Relay, and various circuit breakers and switches. The PDA2 is mounted in the cage just below the Pull out Drawer and uses seven inches of cage space. The primary AC power is fed into this assembly. AC and DC power is distributed throughout the cabinet via terminal blocks T1, T2 and T3 on the Rear Panel.

THEORY OF OPERATION
AC power enters by way of an eight-gauge wire attached to the MCB. Refer to PDA#2 MDR 3225, schematic MDR 3218 (available upon request). AC- and Chassis Ground enter via T1 (rear panel). Pin 1 is for ground and pins 2 and 3 are for AC-.

T1-5, T1-6 and T1-9 are attached to the load side of the MCB. T1-7 and T2-6 are attached to the SSR coil and Field CB indicating switches. T2-7, -8, -9 and -10 supply field power to the Output File load switches. In the event one of the Field Breakers trips, or is set to OFF, the indicating switches will place power on the SSR coil and FTR coils causing flashing operation. In this instance, the FLASH indicator lamp will turn on.

Two Flasher Units are installed in this assembly, and they receive power from a two-pole, 20-amp breaker attached to the load side of the MCB.

A Ground Fault power source is provided on the front and rear of this assembly. A GFI receptacle is placed on the front, swing out panel and an outlet wired to the load side of the GFI is provided on the rear of this assembly.

The Front Panel may be opened during operation, but caution must be used, since high voltage AC power is present on this panel. If any question exists regarding safety, it is best to remove power from the cabinet before opening the panel.

On the extreme right side of the assembly is an opening for the installation of a Model 206, 24VDC Power Supply. The power supply is removable from the front of the assembly. However, the wing nut which holds the Model 206 in place during shipping must be removed before the power supply itself can be removed. Access to the shipping retainer is gained by tilting the rear panel. The rear panel is held in place by two captive thumb screws placed at each end of the assembly. The wing nut is in the lower left hand side of the inner panel.

MODEL 333 CABINET SECTION 3. 206 POWER SUPPLY MODULE

INTRODUCTION
The Model 206 Power Supply Module is mounted in an access area on the right hand side of the PDA2 and is electrically connected via PS socket pins as shown below:

PIN NUMBER	FUNCTION
7	+24VDC OUTPUT
8	DC GROUND
9	EQUIP. GROUND
10	NOT USED
11	AC- INPUT
12	AC+ INPUT

Mounted on the Front Panel are fuses for AC power and 24 VDC, as well as a POWER ON (AC IN) indicator lamp, 24VDC POWER ON indicator lamp and test points for the DC+ and DC ground. Test points are isolated through a series dropping resistor to prevent their use as an external power supply.

INSTALLATION
Installation consists of placing the Model 206 Power Supply Module within the 206 Power Supply Module area in the PDA2 and applies force to mate the Power Supply Module plug into the PDA2 Power Supply socket.

ADJUSTMENTS
None required.

THEORY OF OPERATION
Refer to assembly and schematic drawings M15059 (available upon request). AC power, which enters at terminals 11 and 12, supplies 115 volts AC to POWER ON lamp DS1 and the metal oxide varasitors (MOVs) transient protectors in series with R1 and R2 wire ground wound resistors. The three MOVs (RV1, RV2 AND RV3) are wired from AC+ to AC-, AC+ to

equipment ground and AC- to equipment ground, respectively. Capacitor C3 parallels RV3. This configuration provides both common mode and differential mode transient and noise protection.

Power is applied through F1 to the primary of the transformer TR1. This transformer is of the Ferro-resonant design. AC tuning capacitor C4 is self regulating and prevents variations in input voltage from affecting the output level of the power supply. The transformer drives a high-capacity bridge rectifier with two large filter capacitors C1 and C2, providing low ripple voltage at a high (5 amp) current. A parallel load resistor R3 (50 ohms, 25 watts) is used to partially load the power supply thereby improving load regulation and preventing a residual charge on the filter cap in the event of an open circuit operation after the power is removed.

Fuse F2 (6.25 amp slow blow) is used to protect an accidental overloading. Should the power supply fail and produce a voltage greater than 30 volts, transient protection diode TZ1 will conduct and clamp the output to 30 VDC.

The power supply +24 VDC, output is wired to pin 7 of the plug and DC ground to pin 8. The +24 VDC and DC ground test points are on the Power Supply Front Panel.

MODEL 333 CABINET SECTION 4. INPUT FILE

INTRODUCTION
The function of the Input File is to intermate with and support 14 two channel detector sensor or isolation units. It occupies 5.3 inches of space. Inputs from the field are brought into a terminal block corresponding to one of the other channels units whose output is taken out of the same terminal block and passed to the Controller Unit.

INSTALLATION
The Input Files mount under the Output File. Make the appropriate harness connections to terminal blocks I1 through I16.

THEORY OF OPERTION
Refer to Input Motherboard assembly drawing M15451 and Input File schematic MDR 3205 (available upon request). Each of the 14 forward-facing printed circuit connectors within this unit are connected to a rear facing input/output terminal block by means of a printed circuit mother board. They are arranged in pairs such that each printed circuit has its own input/output terminal block physically adjacent (to the right from the rear) on the mother board. A legend, common to the block physically adjacent, (to the right from the rear) on the mother board. A legend, common to all terminal blocks, appears on the circuit board (right rear) indicting the PC connector pin to which each terminal block position is connected. One spare labeled SP is provided on each of these blocks. These spare terminals are intended to all reassignments of controller inputs. To accomplish this, an input wire from the Controller would be moved from the F or W terminal to the SP terminal thereby providing a terminal for jumping to another signal terminal position.
Two horizontally mounted terminal blocks are provided for AC and DC power input to the Input File. Terminal block I16 provides 115 VAC input with AC+ on terminal 1, AC- on terminal 2, and EQ GND on terminal 3. I15 provides +24 VDC input as well as detector RESET input to the Input File, +24VDC appears on terminal 1, DC ground appears on terminal 2, Detector RESET appears on terminal 3 and CONTROLLER GROUND appears on terminal 4.

MODEL 333 CABINET SECTION 5. OUTPUT FILE

INTRODUCTION
The Output file is intended for use with the Model 332 Cabinet. It provides output load switching to the signal lamps. It occupies 10.5 inches of rack space and is capable of housing twelve Model 200/Model 200IO Switch Packs, four flash transfer relays and a Model 210 Monitor Unit.

Model 200/Midel 200IO Switch Pack DC triggers inputs and 24 VDC enter at the C4 connector mounted on the rear panel. Located on a hinged rear panel are the terminal blocks for AC+ flash control, flash power and switch pack outputs.

Flash programming is a matter of interchanging color coded blocks. Access to these blocks, as well as the hinged rear panel facilities internal wiring.

Interconnections within the output file are made by interconnect cables. These cables provide for ease of maintenance and troubleshooting.

A tap strip, capable of being written on, is provided across the front of the Output File for customer phasing. All terminal blocks on the rear are labeled for ease of identification.

OPERATIONAL DESCRIPTION
Refer to the Output File drawing M15166, line to line drawing MDR3213, and interconnect schematic, MDR 3214 (each of which is available upon request). The operation of the Output File is as follows: AC+ supply for the Model 200/200IO Switch Packs enters at the four AC+ inputs located on terminal block 01. 01-1 provides power for Phase 1, Phase 2 Ped Switch Packs. 01-2 provides power for Phase 3, Phase 4, and Phase 4 Ped Switch Packs. 01-3 provides power for Phase 5, Phase 6, and Phase 6 Ped Switch Packs. 01-4 provides power for Phase 7, Phase 8 and Phase 8 Ped Switch Packs. Each of these power inputs are attached to a Signal Circuit Breaker in the PDA2. Each breaker independently provides 15 amps of service power to three Switch Packs in the Output File. Terminal blocks 01-5 and 01-6 provide FL1 Circuit 1 and FL1 Circuit 2, which are the flasher power signals provided to the Flash Transfer Relays. These signals are derived from two flasher units located in the PDA2. Each of the flasher unit outputs go to the normally open, secondary sides of two of the four Flash Transfer relays:

01-5	FTR1	FTR3
01-6	FTR1	FTR3
01-7	FTR2	FTR4
01-8	FTR2	FTR4

When the controller issues a Logic 0 Switch Pack drive signal, it enters the Output File through connector C4. The signal is then routed to the individual switch pack input. For example, Switch Pack 1 Red receives a logic 0 signal at Pin 6. Since the +24 VDC is supplied to Pin 9, current will flow in the Switch Pack input circuit, specially, the light emitting diode (LED) of an optical isolator. This turns the output device on, causing current to flow from Pin 3 to the Switch Pack to Pin 13 to the flash program block receptacle.

Jumpers on the mating block then route the red signal through the Flash Transfer Relay, and route the yellow signal directly to the field terminal. In case of red flash programming, the program block ties Pin 15 to Pin 9 which connects to the normally closed contact of FTR1 Pin 3. The relay is shown in the non-flash state (de-energized). The signal is then routed through the relay common Pin 5, back through the program block to FT3 position 125 on the rear panel of the Output File. In the energized state of FTR1 (flash mode), FT3-125 would connect through the program block and K1 to the flash bus FL1. Since the yellow signal is not required to flash in this instance, the program block routes this Switch Pack signal directly to the output terminal block FT3. Note that the yellow and green signals are dark during flash operation due to the loss of AC+. The green signal does not flash, therefore, Switch Pack 1 green connects directly to the output terminal block TB, bypassing the program block. If yellow flash is required, the red flash program block is removed from its receptacle and interchanged with the yellow flash program block.

The red signal circuit is routed directly to its field terminal block and the yellow signal is routed through the relay contact to the output field terminal block.

A third type of program block is available which routes load switch outputs directly to the terminal blocks. The program blocks are accessible by swinging the rear panel of the Output File down.

The Output File has 12 Switch Pack positions. The eight vehicle phases may be programmed as described above.

An edge connector and wire harness connects the Model 210 Monitor Unit to the Output File system. Equipment ground is attached to terminal block 01-9 and to the chassis of the Output File.

The AC- signal is fed to the Flash Transfer Relay, located on the front of the Output File, from terminal block 01-10. AC+ from terminal block 01-11 is wired to Pins 28 and FF of the signal monitor edge connector. Additional signals brought into the monitor are those wired to the rear panel terminal blocks. These are the yellow and green indications as well as PED WALK to the monitor for purposes of conflict monitoring.

Two additional relays are also mounted on the rear panel and are accessible from the rear of the Output File. These are the LR (logic relay) and IR (isolation relay) relays.

The purpose of the LR relay is to determine the status of the cabinet door and the 210 Monitor Unit. For example, if the 210 Monitor Units is removed, the LR relay will be energized because the ground path circuit will be lost between Pins 24 and 25 of the 210 Monitor Unit, opening the circuit to the LE relay coil. If the LR relay is de-energized (indicating that the 210 Monitor Unit is removed) and the cabinet door is closed, a continuous path of 115 VAC will pass through contacts 1 and 7 of the LR relay through the door switch. This provides 115 VAC to the Solid State Relay in the PDA, causing the system to go to standby flashing operation. This interlock system prevents unattended operation of the cabinet without a 210 Monitor Unit.

The IR relay, when energized, indicates that the flashing system is powered. In effect, if it is necessary to energize the flash relays, then the FTR signal on terminal block 01-14 will be directed to the transfer relays and to the coil of the IR relay. At this point, Pins 6 and 7 of the IR

will contact providing a DC ground and a flash sense output to terminal block 01-4, terminal block 01-13 is the door switch input (discussed previously) that is tied with the LR and the relay coil operation.

The SSR coil may also be energized via Pin EE of the 210 Monitor Unit. Pin EE of the 210 Monitor Units receives 115 VAC from Pin 28 when 210 Monitor Unit detects a conflict condition.

Additional signals such as WDT (WATCH DOG TIMER), 24 VDC stop timing output, DC ground and external reset are signals that are involved with 210 Monitor Unit. An optional Red Monitor Board Assembly may be attached to the rear panel of the output file. A 20-conductor cable assembly for monitoring the red outputs of all signal load switches is provided and attached to the red monitor board assembly. The cable is routed to the front of the output file and plugged into the connector provided on the front of the conflict monitor.

A means of selecting the active red monitor channel is provided on the red monitor board assembly. Selection is accomplished by a two-position jumper (shunt). The center position is wired to a red monitor input channel. Moving the jumper to the right provides continuous AC input, thereby disabling red monitoring for the selected channel. Moving the jumper to the left will attach the monitor channel to the corresponding load switch output. This jumper assembly is accessible while the intersection is in operation. Twelve selections are provided: eight phase selections and four overlap selections.

Red monitor disable control is provided on the monitor board assembly. Terminal block 02-6 is connected to a 24 volt relay coil. This relay is designated the red monitor control relay (RM). The normally closed contacts provide 115 VAC to the red monitor select line and Pin 20 on the monitor cable.

When a logic ground signal is applied to terminal block 02-6, the RM relay energizes and opens the contacts, removing the 115 VAC to the red monitor cable. The relay power is derived from the cabinet 24 VDC cabinet supply via TB02-1.

The conflict monitor inputs when an Auxiliary Output File is used, including red outputs, through the use of a cable harness coiled in the rear of the output file. The assignments for this cable are as follows:

CMU AUXILIARY HARNESS			
CMU CHANNEL NUMBER		**CMU PIN NUMBER**	**OUTPUT FILE PT**
9	YELLOW	16	122
9	GREEN	13	123
11	YELLOW	15	115
10	YELLOW	U	125
10	GREEN	R	126
11	GREEN	S	116
12	GREEN	V	103
12	YELLOW	18	102

Monitoring Devices

Conflict monitoring devices shall conform to Section 86-3.08C, "Monitoring Device", of the Standard Specifications and these Technical Provisions:

The cabinet shall contain a conspicuous warning against operation without the monitoring device being installed.

The First Paragraph of Section 86-3.08C, "Monitoring Devices", of the Standard Specifications is amended to read:

A N.E.M.A. solid-state monitoring device shall be installed external to and electrically independent of the solid-state controller-unit. In the event of a conflicting green, yellow, walk or no red signal indication (vehicular or pedestrian or both), the monitoring device shall cause the signal system to go into flashing operation. The flashing operation shall lock-in the stop timing circuit of the controller unit. The conflict monitor shall visually display the conflicting indications.

The monitoring device shall monitor green, yellow, walk, and lack of red output voltages.

The monitoring device shall be assembled to prevent circuit disconnection due to vibration, shock, etc.

Solid State Switching Devices:

Solid-state switching devices shall conform to the provisions of Section 86-3.08D, "Solid-State Switching Devices", of the Standard Specifications and these Technical Provisions:

Section 86-3.08D, "Solid-State Switching Devices", of the Standard Specifications, the Third Paragraph is hereby amended to read:

Solid-state switching devices shall be provided with L.E.D.'s to monitor each lamp circuit input from the controller and output to the field conductors. The L.E.D.'s shall be visible when viewing the installed switching device.

Emergency Vehicle Preemption System

In accordance with Public Contract Code Section 3400, the City hereby declares that the Opticom brand product shall be used exclusively on all traffic signal projects and substitutions will not be allowed. This determination is made based upon the following findings:

1. The City of Moreno Valley has deployed Opticom systems on approximately twenty five percent of the existing signalized intersections.
2. Use of Opticom will reduce the necessity of stocking multiple, incompatible parts and supplies thereby decreasing maintenance costs.

3. Use of Opticom exclusively will ensure one fully compatible city-wide emergency vehicle pre-emption system and will provide compatibility to existing Opticom systems in place within adjacent jurisdictions, namely the City of Riverside and Caltrans.
4. Opticom has been demonstrated to be a very reliable product and meets all of the expectations / needs of the emergency service providers.

The Contractor shall supply the system complete, including receivers of the type shown on the Plans, mounting equipment, cable, discriminator units, controller/cabinet interface equipment, and any other equipment, tools and/or materials necessary to provide a complete, fully functioning emergency vehicle pre-emption system.

The Optical Detector shall be mounted as specified on the Plans, at the locations shown thereon.

Emergency Vehicle Preemption System sequence of operation shall be approved by the Engineer prior to timing and turn-on of signals.

It shall be the responsibility of the Contractor that the authorized "Dealer," of the Emergency Vehicle Preemption (EVP) System, shall be present for the first day of the traffic signal lighting function test. To insure installation and functioning of the EVP equipment, the representative from the dealer shall be certified by the vendor and provide a vehicle equipped with an emitter to test and verify satisfactory operation of equipment, to insure a secure system with proper vehicle codes, and classifications of emergency vehicles.

Testing

The Contractor shall demonstrate, to the satisfaction of the Engineer, that the installed system consistently registers pre-emption requests at a distance of 1000 feet or the near crosswalk of the adjacent signalized intersection (whichever is less) in each direction for which detectors are installed.

Vehicle Signal Faces and Signal Heads:

Subsection 86-4.01A, "Optical Units," of the State Standard Specifications shall be deemed to include the following:

All optical units shall be ordered as follows:

Circular red: Dialight 433-1210-003XL or approved equal
Circular yellow: Dialight 433-3230-901XL or approved equal
Circular green: Dialight 433-2220-001XL or approved equal
Red arrow: Dialight 432-1314-001XOD or approved equal
Yellow arrow: Dialight 431-3334-901XOD or approved equal
Green arrow: Dialight 432-2374-001XOD or approved equal

The second sentence of the third paragraph of Subsection 86-4.04, "Backplates," of the State Standard Specifications shall be amended to read as follows:

Sections shall be joined using 10-24 machine screws with washer, lock washer and nut, painted to match the backplate. Backplates shall be metal without louvers.

Testing (LED)

Subsection 86-4.02D(1), "Design Qualification Testing," of the State Standard Specifications, paragraph two (2) shall be deleted and paragraph 3 shall be amended to read as follows:

Manufacturer's test data shall be submitted to Public Works Traffic Signal Maintenance Division and the Engineer.

Pedestrian Signal Faces:

Subsection 86-4.06A, "Types", of the State Standard Specifications shall be amended to read as follows:

Pedestrian signal faces shall be countdown type, Dialight 430 6479 001X, or approved equal.

Subsection 86-4.06B, "Front Screen", of the State Standard Specifications is amended to read as follows:

The following type of front screen shall be provided on each pedestrian signal:

A 1 ½ inch deep Z-crate type screen of 0.03 inch nominal thickness polycarbonate. The screening shall be mounted in a frame constructed of 0.04 inch minimum thickness aluminum alloy or polycarbonate. The screen shall be installed parallel to the face of the message plate and shall be held in place by the use of stainless steel screws. The visor described in Section 86-4.06D, "Visors," of the State Standard Specifications is not required with this type screen.

The screen and frame shall be fabricated from aluminum anodized flat black, or finished with flat black enamel as specified in Section 91-4.01, "Enamel, Traffic Signal, Lusterless, Black" of the State Standard Specifications. Plastic housing will not be permitted.

Signal Mounting Assemblies:

Subsection 86-4.04, "Signal Mounting Assemblies," is hereby revised to require cast bronze terminal compartments.

Detectors:

Subsection 86-5.01A (4), "Construction Materials", of the State Standard Specifications, the preferred choices shall be as follows:

Loop wire shall be Type "2" (THWN AWG #14).

The lead-in cable shall conform to Type "B."

The second paragraph of Subsection 86-5.01A (5) "Installation Details" of the State Standard Specifications shall be deemed revised as follows:

Type "E" inductive loop detector shall consist of four turns of loop wire of the type indicated above. Type "D" inductive loop detector shall consist of five turns of loop wire of the type indicated above.

Subsection 86-5.01A (5) shall be deemed to include the following additional requirements:

Type "D" loops shall be physically constructed by sawcutting two slots 21 inches apart, centered on a type "E" (round) loop, oriented at a 45 degree angle to the direction of travel.

Loop sawcut shall be backfilled using "hot melt rubberized asphalt sealant" and no other backfill material shall be used.

Minimum conductor coverage shall be 1 inch.

The Contractor shall test each Type D detector with a bicycle wheel made of ferromagnetic material, weighing not more than three pounds exclusive of tire and innertube. If a frame is used to hold the wheel upright, it shall be made of a non-ferromagnetic material such as wood. Special features, components or vehicles designed to activate the detector will not be permitted. The Contractor shall place or hold the wheel vertically directly over each Type D detector. The loop detector must register and hold the presence of the bicycle wheel for a continuous period of time of at least two minutes in order for the engineer to accept the detector test and installation.

The Contractor shall test each Type E detector with a motor driven cycle, as defined in the California Vehicle Code that is licensed for street use by the Department of Motor Vehicles of the State of California. The unladen weight of the vehicle shall not exceed 220 pounds and the engine displacement shall not exceed 100 cubic centimeters. Special features, components or vehicles designed to activate the detector will not be permitted. The Contractor shall provide an operator licensed to drive such vehicle who shall drive the motor driven cycle through the response or detection area of the detector at not less than 3 mph nor more than 7 mph. The loop detector must detect the motor driven vehicle without the call being held in order for the engineer to accept the detector test and installation.

Pedestrian Push Buttons:

Subsection 86-5.02, "Pedestrian Push Button Assemblies", of the State Standard Specifications shall be deemed revised to include the following:

Pedestrian push buttons shall be Type B and shall be ADA compliant.

Bicycle push buttons shall be Type B with bicycle plate.

Pedestrian and bicycle push buttons signs shall conform to the details shown on the plans except that the message and symbol shall conform to FHWA Standard Highway

Signs, latest edition, R10-3e. The specifications are available at no charge from the Federal Highway Association MUTCD Web site at http://mutcd.fhwa.dot.gov/ser-shs_millennium.htm or by contacting the City's Transportation Division at (951) 413-3140.

Luminaires:

In accordance with Public Contract Code Section 3400, the City hereby declares that the G.E. Model MDCL25S1M12FMC32 (120 VAC, 250-watt High Pressure Sodium, 90-degree cut-off optics, power door, without photoelectric cell) shall be exclusively supplied for use on all traffic signal projects and substitutions will not be allowed. This determination is made based upon the following findings:

1. This brand / model of luminaire has been deployed on all signalized intersections within the City of Moreno Valley.
2. Use of this brand / model of luminaire will reduce the necessity of stocking multiple incompatible parts and supplies thereby decreasing overall maintenance costs.
3. Use of this brand / model will ensure consistent light output and ground illuminance at all signalized intersections.
4. This brand / model has been demonstrated to be a very reliable product and meets all of the expectations / needs of the motoring public.

Subsection 86-6.01, "High Pressure Sodium Luminaires", of the State Standard Specifications shall be deemed revised to include the following:

If the luminaire housing is provided with a hole for the receptacle, the hole shall be closed in a weatherproof manner by using one of the following methods:

1. A stainless steel or aluminum plate pressed into the larger hole of the bass and securely fastened with RTV silicone sealant.

2. A stainless steel or aluminum plate and gasket held by two stainless steel machine screws which are fastened into a base nut plate.

The seventh paragraph of Subsection 86-6.01, "High Pressure Sodium Luminaires", of the State Standard Specifications shall be deemed to read as follows:

Each mast arm mounted luminaire will be furnished without a photoelectric unit receptacle. A photoelectric unit receptacle is not to be included. If the luminaire housing is provided with a hole for the receptacle, the hole shall be closed, covered and sealed, with weatherproof material, in a permanent manner.

Subsection 86-6.01A, "High Pressure Sodium Lamp Ballasts," of the State Standard Specifications shall be deemed revised to include the following:

Ballasts shall be the lag or lead regulator type conforming to Subsection 86-6.01A (1) Regulator Type Ballasts.

Luminaires shall be the brand and model number specified earlier in this section of the Technical Provisions.

Subsection 86-6.01B "High Pressure Sodium Lamps", of the State Standard Specifications shall be deemed revised to include the following:

The lamp shall be 250 watt high pressure sodium vapor.

Internally Illuminated Street Name Signs:

Subsection 86-6.065, "Internally Illuminated Street Name Signs", of the State Standard Specifications shall be deemed modified to include the following:

New internally illuminated street name signs shall be Type "A", (CALTRANS Standard Plan ES-70) and the City of Moreno Valley Standard Plan Nos. 419A, 419B and 419C to accommodate an 18 inch high sign panel.

Sign panels shall be 18 inches in height, blue background color with FHWA Series "C" white (silver) legends, letters and block numbers. The street name shall have eight-inch letters for upper case and six-inch for lower case. The block numbers shall be four inches high, the street name suffix shall be four-inch upper case and three-inch lower case. The legends, block numbers, and lettering are specified in the City Standard Plan Nos. 419A, 419B, and 419C.

A ½ -inch close nipple and LB conduit shall be installed on the pole at the coupling point. The cable between sign and conduit shall be 3-conductor AWG No. 16, Type SJO. The green conductor cable shall be used for grounding between sign housing and conduit. The cable shall enter the sign housing and conduit through neoprene bushed CGB connectors. The cable shall be dressed in neatly arced drip loop between sign and conduit with sufficient slack to facilitate sign swing.

The light source shall be Light Emitting Diode (LED) technology, Archipelago Lighting Lumen-Starr or approved equivalent, satisfying the following requirements:

The power supply shall include a Class 2 LED driver with a power factor of at least 99 percent and total harmonic distortion of less than 10 percent, mounted externally from the LED lamps, capable of being mounted to an existing ballast tray. The driver shall be configured for high-frequency operation.

The LED lamps shall be mounted to a rotating dual lamp tube housing constructed of aluminum with recessed LEDs, size not to exceed 5/8" diameter per lamp. Lamps shall mount in adapters manufactured to accommodate Slim Line, HO, and Bi Pin existing sockets as required. The LED light system shall be capable of providing at least as much light output as an equivalent fluorescent tube over the lifetime of the units.

The lamps and drivers shall be UL certified and provided with a five-year warranty against manufacturing defects.

The thirty-first through thirty-third paragraphs (Mounting Assembly) of Subsection 86-6.065 "Internally Illuminated Street Name Signs", of the State Standard Specifications shall be deemed replaced in their entirety with the following:

The sign shall be mounted to a dedicated mast arm mounted above the traffic signal mast arm. On new poles, a simplex shall be factory-installed for this purpose as shown on City Standard Plan 419B. On existing poles where called out on the Plans, the sign shall be retrofitted to the pole shaft, with the method of retrofit specified therein.

Removing, Reinstalling or Salvaging Electrical Equipment:

Salvageable materials shall become the property of the Contractor unless otherwise noted.

Traffic Signal Turn-on

Turn-on of the new traffic signal system shall not be on, nor shall the functional test start on a Friday, Saturday, Sunday, Holiday, or any day preceding a holiday. The Traffic Engineer shall be notified at least five working days prior to the intended turn-on.

The Contractor shall notify the City of Moreno Valley Transportation Engineering Division in writing to conduct an inspection and prepare a punch list of the items that need to be corrected at least one week prior to traffic signal turn-on.

The City of Moreno Valley Transportation Engineering Division will notify the Contractor in writing and provide the Contractor with punch list items. The Contractor shall correct the punch list items and notify the City of Moreno Valley Transportation Engineering Division in writing of completion of the punch list items.

Upon completion of the punch list items, The City of Moreno Valley Transportation Engineering Division will notify the Contractor in writing to schedule the traffic signal turn-on. The Contractor shall coordinate with the City to ensure the controller manufacturer's representative is on-site when the traffic signal is turned on.

The striping and sign installation of the traffic signal project shall be completed 24 hours prior to traffic signal turn-on.

General Cleaning:

The intersection must be cleaned and swept completely prior to traffic signal turn-on. Clean up includes but is not limited to:

Signal poles, signal mast arms, signal heads, signal head visors, signal head lenses, traffic safety lights, controller cabinet, service cabinet, signs, sidewalks, curbs, gutters, intersection within 500 feet in all directions, etc.

Payment:
The contract unit price paid per each (EA) for "Traffic Signal Detector Loop" shall include, but not be limited to the complete installation of the loop detectors, to the termination pull box,

conduits, slot cutting, lead-in cable loop wire, and application of sealant. The price shall include full compensation for furnishing all labor, materials, tools, equipment, and incidentals, as directed by the Engineer, and all other appurtenant work as shown on the Plans as per the Specifications, and no additional compensation will be made therefore.

The contract lump sum (LS) price paid for " Traffic Signal Modification at Perris Blvd and Kalmia Ave" and "New Traffic Signal Installation at Perris Blvd and Pico Vista Way" shall include, but not be limited to, the complete installation of traffic signals, installation of traffic controller cabinet/service cabinet, signs mounted on signal poles and arms, safety lighting, internally illuminated street name signs (IISNS), foundations, piles, miscellaneous PCC and AC trench patch, installation of signal interconnect systems, pull boxes, conduits, vehicular and pedestrian detection, and cables/conductors; provisions of electrical service connection; and energizing, testing, and all other work required to provide a complete, fully functioning traffic signal system as shown on the Plans and specified herein. Said prices shall include full compensation for furnishing all labor, materials, tools, equipment, incidentals, as directed by the engineer, and all other appurtenant work as shown on the plans as per the Specifications, and no additional compensation will be made therefore. Payment will be made on a basis of the percentage of work completed for this bid item.

TRAFFIC STRIPING, PAVEMENT MARKINGS, AND PAVEMENT MARKERS (BID ITEM NO. 78)

Painted traffic stripes (lane lines and speed limit markings) and applying thermoplastic pavement markings (word and symbol markings, limit lines, crosswalk, etc.) shall conform to the provisions in Section 84, "Traffic Stripes and Pavement Markings," of the State of California Standard Specifications and these Special Provisions.

The subparagraphs of the first paragraph in Section 84-3.02, "Materials," of the State of California Standard Specifications are amended to read:

	State Specification No.
Rapid Dry Water Base, Traffic Line.—White, Yellow and Black	PTWB-01

The second and third paragraphs in Section 84-3.02, "Materials," of the State of California Standard Specifications are amended to read:

> State Specifications for traffic paint and glass beads may be obtained from the Transportation Laboratory, 5900 Folsom Boulevard, Sacramento, CA 95819-4612, telephone number 916.227.7289.
>
> Glass beads shall conform to 1-ACOT type beads or equal.

The Contractor shall layout and "cat-track" the alignment of the proposed striping at 15 ft intervals and "spot" the proposed pavement markings as called for on the Plans. Striping shall vary no more than 2 inches in 50 ft from the specified alignment. The Engineer may waive minor variations.

The Contractor shall not proceed with the painting of any striping or applying thermoplastic pavement markings until the Engineer has checked and approved the cat-tracking and spotting, and has authorized the Contractor to proceed.

Traffic striping shall be applied with airless equipment. All traffic striping shall be performed with a road liner type striping machine. Where the configuration or location of a traffic stripe is such that the use of a road liner type striping machine is unsuitable, traffic paint and glass beads may be applied by other methods and equipment approved by the Engineer. The Engineer shall determine if the road liner type striping machine is unsuitable for a particular use.

The first coat of paint shall be applied upon completion of the surfacing. The second coat of paint shall not be applied until seven (7) calendar days after the first coat. Each coat of paint shall be applied at the wet film thickness of 10-12 mils for white and yellow paint and 7 mils for black paint. All paint shall be applied at a relative humidity below seventy-five percent (75%) and an ambient temperature above 13° C (55° F), unless otherwise approved by the Engineer.

Except for black paint, No. 1 reflective glass beads shall be uniformly incorporated in all coats of paint concurrently with the application of the paint. The glass beads shall be embedded in the coat of traffic paint being applied to a depth of at least one-half their diameters. The reflective glass beads shall be applied to the first coat of paint at the rate of 1.5 lb of beads per 0.26 Gal of paint, and to the second coat of paint at the rate of 2 lb of beads per 0.26 Gal of paint.

Except as otherwise noted on the Plans or as directed by the Engineer, all angle points, as shown on the striping Plans shall be painted as a smooth, tangent curve with a radius and length as approved in the field.

Temporary tape or reflective markers utilized for the purposes of interim delineation for centerline, lane lines, and crosswalk lines shall be placed to the side of the final striping pattern in such a way so that it will not interfere with the first coat of paint. All temporary tape and reflective markers applied for the purpose of interim delineation shall be removed by the Contractor at no additional cost to the City upon completion of the first coat of striping and prior to the final striping.

Stencils used for pavement markings must conform to the latest Caltrans approved Metric Stenciling Standards.

Add to Subsection 84-1.04, "Protection from Damage," of the State of California Standard Specifications the following:

> Newly painted or existing striping or applied thermoplastic pavement markings which are damaged as a result of the construction, including wheel markings by public traffic and the construction equipment, shall be repainted or thermoplastic replaced, and any associated removals shall be performed as outlined in these Special Provisions at the sole expense of the Contractor and no separate compensation will be allowed therefore.

Existing traffic striping and pavement markings that do not conform to the approved Plans shall be removed by wet sandblasting. Other methods may be requested by the Contractor, but shall

be submitted in writing to the Engineer for approval. Blackout of existing traffic striping or pavement markings, which do not conform to the approved Plan, shall not be allowed.

Painting traffic stripes and applying of thermoplastic pavement markings shall not be separately measured.

The contract lump sum (LS) price paid for "Traffic Striping, Pavement Markings, and Pavement Markers" shall include full compensation for furnishing all labor, materials, tools, equipment, and incidentals for doing all the work involved in painting traffic striping and applying thermoplastic pavement markings the items specified herein and no additional compensation shall be allowed therefore. Payment will be made on a basis of the percentage of work completed for this bid item.

PAVEMENT MARKERS

Pavement markers shall conform to the provisions in Section 85, "Pavement Markers," of the State of California Standard Specifications and these Special Provisions.

Certificates of compliance shall be furnished for pavement markers as specified in "Prequalified and Tested Signing and Delineation Materials," elsewhere in these Special Provisions.

Reflective pavement markers shall comply with the specific intensity requirements for reflectance after abrading the lens surface in accordance with the "Steel Wool Abrasion Procedure," specified for pavement markers placed in pavement recesses in Section 85-1.05, "Reflective Pavement Markers," of the State of California Standard Specifications.

Non-reflective pavement markers shall conform to the requirements of the Section 85-1.04, "Non-Reflective Pavement Markers," of the State of California Standard Specifications. The bituminous adhesive used to install the markers shall be a hot melt bituminous adhesive asphaltic material with homogeneously mixed mineral filler and shall conform to the requirements specified in Subsection 85-1.055, "Adhesives," of the State of California Standard Specifications.

Reflective pavement markers shall be installed per the approved Plan unless otherwise approved by the Engineer. The composition of the material shall be such that its properties shall not deteriorate when heated to, and applied at temperatures up to 425° F, using either air or oil jacketed melters.

Reflective pavement markers shall be placed at locations as established by the applicable Caltrans striping detail noted on the approved striping Plan which includes, but is not limited to temporary painted line(s), new striping, or existing striping. There shall be one marker for each location. The Contractor shall perform all work necessary to establish satisfactory locations for markers.

The Contractor shall remove existing reflective pavement markers that do not conform to the approved Plan.

Reflective pavement markers shall be of the prismatic reflector type (3M model white 290-W and yellow 291-2Y or approved equal) as outlined in Subsection 85-1.05, "Reflective Pavement Markers," of the State of California Standard Specifications.

Existing pavement markers (blue) designating location of the fire hydrants shall be replaced "in kind" and proposed pavement markers (blue) designating location of the fire hydrants shall be installed, as indicated on the plans, after the paving is completed.

The contract lump sum (LS) price paid for Traffic Striping, Pavement Markings, and Pavement Markers shall include full compensation for furnishing all labor, materials, tools, equipment, and incidentals, for doing all the work involved in applying pavement markers and the items specified herein and no additional compensation shall be allowed therefor.

Full compensation for pavement markers (traffic delineation) shall be considered as included in the contract lump sum (LS) price paid for Traffic Striping, Pavement Markings, and Pavement Markers and no additional compensation will be allowed therefor.

TRAFFIC AND STREET NAME SIGNS (BID ITEM NOS. 79 AND 80)

This work shall include the furnishing and installation of new signs and posts, relocating existing signs as indicated on the Plans with new post(s), and disposal by the Contractor of existing signs to be removed.

All work and materials shall conform to the provisions set forth in Section 56 "Signs" of the latest issue as currently available of the State of California, Department of Transportation Standard Specifications except as noted otherwise in the following Technical Provisions.

All sign panels shall be 0.080 inches gauge 6061-T76 or 5052-H38 aluminum alloy certified as meeting all California Specifications and treated with an alodine 1200 conversion coating. The reflectivity of all stop and warning signs shall be high intensity grade and all other signs shall be engineering grade unless specified by the Resident Engineer. Any chipping or bending of sign panels shall be considered as sufficient cause to require replacement of panels at the Contractor's expense.

All signs (including non-illuminated street-name signs) shall be provided with a graffiti-protective overlay film (3M Scotchlite Series 1150 or approved equal). If factory-installed, an invoice or bill of sale shall be provided for the delivered signs demonstrating the film was factory-installed. If field-installed, it shall be installed prior to sign mounting. The City reserves the right to observe the installation of the film, and the Contractor shall notify the City at least 48 hours in advance. If notification is not provided, the City will test for the presence of the film using a destructive testing method, and if the film is not present then the signs(s) shall be replaced at the Contractor's sole expense.

The straps and saddle brackets for mounting sign panels on electroliers, sign structure posts, and traffic signal standards shall be corrosion-resisting chromium nickel steel conforming to the specifications of ASTM designation A167 Type 302. Theft proof bolts shall be stainless steel with a chromium content of at least seventeen percent 17% and a nickel content of at least eight percent 8%.

Street name sign(s) shall conform to the City of Moreno Valley's Standard Plan Numbers 401 through 404, all other signs shall be in conformance with Standard Plan Numbers 406 through 410, in these Technical Provisions, and as shown on the Plans. The Contractor shall install blue street name signs.

All sign installations shall have a minimum vertical clearance of 7 feet from the bottom of the sign to grade and a minimum horizontal clearance of 2 ft from face of curb to edge of signpost. There must be a minimum 4 ft clearance from sign post to the back edge of the sidewalk for wheelchair access or as specified by resident engineer. When there is no sidewalk, curb, and gutter, the horizontal clearance shall be 6 ft - 8 ft from edge of pavement. The Contractor shall replace existing sign post if the minimum vertical clearance of the signs cannot be achieved.

Except for stop signs and street name signs, any warning or regulatory sign with a 3 ft maximum width shall be mounted on street lights whenever possible.

Caltrans roadside signs shall be mounted on wood posts.

The sign post, anchor, and sleeve assembly shall be per City Standard Plan Number 407. The anchor and sleeve assembly shall be power driven into the ground simultaneously until 4 in of the anchor and sleeve assembly is above the grade. The square sign post shall then be installed into the anchor and sleeve assembly to a minimum of 6 in and secured in place with a minimum of two 3/8 in drive rivets installed in the on-coming traffic side and curb side to pull the post into one corner of the anchor.

All signs shall be installed with washers larger than the head of the drive rivet or bolt (fender washers preferred).

Installation according to these requirements is essential to maintain the break-away characteristics of the post system. Under no circumstances shall the anchor assembly be secured in concrete footings.

Any sign measuring 36 in or larger, except stop signs and street name signs, must have approved strapping or back braces installed. Any deviation shall be approved by the Engineer.

All signs shall be installed before the roadway is open to traffic.

However, those signs that are not applicable at the time of opening shall be covered until such time when they become valid.

Existing traffic signs and posts that do not conform to the approved Plans shall be removed by the Contractor. All signs and posts removed shall become property of the Contractor. Any holes left in the existing sidewalk as a result of post removal shall be filled by the Contractor with a Por-Rock concrete mix or equal to a point flush with the existing sidewalk.

All signs and posts shall be new unless specified to be reused. Any damaged existing signs or signposts that are denoted as being relocated on the Plans shall be replaced with new materials, as directed by the Engineer.

The contract unit price paid per each (EA) for "New Roadside Sign" shall include full compensation for furnishing all labor, materials, tools, equipment, and incidentals for doing all the work involved in installing Roadside Signs and the items specified herein and no additional compensation shall be allowed therefore.

The contract unit price paid per each (EA) for "Relocate Roadside Sign" shall include full compensation for furnishing all labor, materials, tools, equipment, and incidentals for doing all the work involved in relocating Roadside Signs and the items specified herein and no additional compensation shall be allowed therefore.

CONTROL DENSITY FILL (BID ITEM NO. 81)

PART 1 – GENERAL

1.01 DESCRIPTION

Control Density Fill (CDF) is used as a low strength, self consolidating fill material for confined spaces which can be easily excavatable at a later time. CDF is characterized by a high maximum slump of 8 inches. CDF is not a structural concrete and should not be used in such applications.

CDF may be used as a trench backfill, structural backfill, pipe bedding, or pipe filling for abandonment in place. CDF shall consist of Portland cement, aggregates, water and fly ash. Chemical admixtures and other mineral admixtures may be used.

The actual mix proportions and flow characteristics shall be determined by the producer of the CDF to meet site conditions. Mix designs and performance tests shall be submitted to the Engineer for approval.

1.02 UTILITY TRENCH CDF MIX DESIGN (PER CUBIC YARD)

A. Cement 50 – max lbs
B. Fly Ash (Type F) 50 - 150 lbs
C. Total Mix Water 35 gallons Max.
D. Stable Air Content 20 - 30%

CDF shall be hand excavatable and shall contain aggregate no larger than 3/8 inch and the 3/8 inch aggregate shall comprise no more than 20 percent of the total aggregate content.

PART 2 - PRODUCT

2.01 PORTLAND CEMENT

Portland cement shall conform to the requirements of Section 03300, Part 2.01 A of the EMWD Specifications.

2.02 AGGREGATES

Aggregates shall conform to the requirements of Section 03300, Part 2.01 B of the EMWD Specifications, except as follows. Aggregates shall be pretested in CDF mixtures similar to those

anticipated for the work, confirming their ability to perform as required for the specific application. Aggregates not in conformance with Section 03300 may be used when approved by the Engineer, providing the material has a minimum sand equivalent of 20, the percentage passing the No. 200 sieve does not exceed 12 percent, and the fines are non-plastic.

2.03 WATER

Water shall be free of oils, acids, alkalies, organic matter or other deleterious substances.

2.04 ADMIXTURES

Admixtures shall conform to the requirements of Section 03300, Part 2.01 C of the EMWD Specifications.

2.05 FLY ASH

Fly ash shall conform to the requirements of ASTM C 618, Class F. Fly ash as a percent by weight of total cementitious material, shall not exceed 20 percent.

PART 3 – EXECUTION

3.01 MIXING

Mixing shall conform to the requirements of Section 03300, Part 2.03 of the EMWD Specifications, except for the one and one-half hour time limit specified in Paragraph B of Part 2.03. Unless otherwise specified, under conditions contributing to quick setting, the Engineer may specify a time limit, not to exceed two and one-half hours.

When CDF is used underneath a paved public right-of-way, the mixture shall contain a minimum of 25 pounds per cubic yard of cement when using washed concrete sand.

Adjustment of the mixture to achieve improved placement characteristics shall be through the use of chemical admixtures. No increase in water content or water to cement ratio will be allowed.

3.02 TESTING

CDF shall be tested for plastic unit weight. Plastic unit weight shall not deviate more than +10 percent of theoretical unit weight shown on the approved mix design. Unit weight shall be determined in accordance with ASTM C138.

CDF's consistency shall be tested by the slump method. The slump shall be measured in accordance with ASTM C143.

3.03 PLACEMENT

CDF may be placed by chutes, conveyors, buckets, or pumps depending upon the application and accessibility.

For trench backfill, CDF shall be placed continuously. To contain CDF when filling long open trenches or open ended structures in stages, the end points shall be adequately bulkheaded to prevent movement. Methods may include bulkheading with sandbags, earth dams, forms, or stiffer mixtures of CDF. CDF shall be placed from the centerline of mainline utilities to the bottom of the excavation.

For bedding, CDF shall be placed in a manner to prevent flotation or displacement of the embedded item. Methods of preventing flotation or displacement may include placement of CDF in lifts, faster setting CDF or lower slump CDF over the embedded item.

For backfilling of pipelines to be abandoned in place, CDF shall be pumped into the pipeline to be abandoned. It is intended that the disconnected ends of the pipeline shall be the primary means for injecting CDF into the pipeline. The Contractor may excavate for additional injection points along the pipeline. The pipeline shall be filled uniformly to within 90 percent of the pipe soffit. The lack of voids (other than the top 10 percent) shall be demonstrated to the Engineer by breaking out small sections of pipeline in various critical locations.

Pavement may be placed directly upon the CDF as soon as the surface will withstand the paving process without displacement or disruption. If the placement of the CDF is not completed in time to allow permanent paving to be completed the same day, the Contractor shall prevent traffic contact with the CDF until paving is completed.

Note that the actual quantity for this item 'Control Density Fill' in the Bid Schedule may vary significantly compared to the estimated quantity in the Bid Schedule and can be zero (0). This item shall be considered a minor bid item and shall be paid at the Contract Unit Price for this bid item regardless if there is a increase or decrease in excess of twenty-five (25%) percent in the quantity listed in the bid. Work under this item applies to backfill over Eastern Municipal Water District (EMWD) facilities, either water or sanitary sewer, that provide less than twelve inches of vertical separation between existing utility and new storm drain improvements.

The contract unit price paid per cubic yard (CY) for "Control Density Fill" shall include full compensation for furnishing all labor, materials, tools, equipment, and incidentals for doing all the work involved in providing control density fill and the items specified herein and no additional compensation shall be allowed therefore.

SUBGRADE STABILIZATION REPAIRS (BID ITEM NO. 82)

If saturated subgrades are encountered, excavate and remove the unsuitable soil to a depth of 24 inches below the subgrade level and replace with compacted fill material, consisting of Crushed Miscellaneous Base (CMB). The moist/saturated soil should be separated from the CMB layer with a layer of geogrid (Tensar TX7, Tensar BX1200, Mirafi BXG12 or equivalent). Place the CMB layer in loose lifts of 8 inches thickness. If the CMB layer is still saturated after placing and compacting the first 8-inches lift, place a second layer of geogrid layer on top of the first 8-inch CMB course. Backfill to the required subgrade elevation with the CMB course.

Subgrade soil stabilized as such should be compacted and moisture conditioned to meet the project requirements. The actual depth of removal and replacement may vary based on the extent of saturated soil and should be verified by a geotechnical engineer during the construction.

Note that the actual quantity for this item 'Subgrade Stabilization Repairs' in the Bid Schedule may vary significantly compared to the estimated quantity in the Bid Schedule and can be zero (0). This item shall be considered a minor bid item and shall be paid at the Contract Unit Price for this bid item regardless if there is a increase or decrease in excess of twenty-five (25%) percent in the quantity listed in the bid. Work under this item applies to areas where saturated subgrades are encountered.

The contract unit price paid per cubic yard (CY) for "Subgrade Stabilization Repairs" shall include full compensation for furnishing all labor, materials, tools, equipment, and incidentals for doing all the work involved in providing control density fill and the items specified herein and no additional compensation shall be allowed therefore.

AC LEVELING COURSE (BID ITEM NO. 83)

Asphalt concrete leveling course material shall be constructed in accordance with Hot Mix Asphalt Concrete of these technical provisions.

The contract unit price paid per ton (TN) of "AC Leveling Course" shall include full compensation for furnishing all labor, materials, tools, equipment and incidentals, and for doing all the work involved in constructing asphalt concrete leveling coarse complete in place, and no additional compensation will be allowed therefore.

CRACK SEAL AND SLURRY SEAL EXISTING AC PAVEMENT (BID ITEM NOS. 117 AND 120)

Work shall consist of cleaning and sealing the existing transverse and longitudinal cracks and joints and random cracks in bituminous pavement surfaces.

The Contractor shall spray all weeds in cracks with Monsanto brand Roundup (or approved equal) a minimum of fourteen (14) calendar days prior to crack sealing work. All weeds shall be re-sprayed if rain occurs within 48 hours after application. The herbicide mixture shall contain Blazon, or approved equal, a purple dye to easily confirm the herbicide has been applied. The Contractor shall remove any and all weeds that are growing through cracks from the project street located within the pavement or growing between the concrete gutter and the pavement. Payment for weed killing/herbicide application and weeds removal shall be included in the contract unit price paid per lineal foot for crack sealing and shall include full compensation for all labor, tools, materials, equipment, and incidentals for doing work involved and no additional compensation will be allowed therefor.

Pavement cracks 1/4" wide and larger shall be sealed. Pavement cracks 1/8" to 1" wide shall be cleared of all loose particles of dust, dirt, and laitance with oil-free compressed air immediately preceding the sealing operation. Cracks shall be routed out as necessary to provide a reservoir for the sealer that will have a depth of l" to 1 1/2".

The joint and crack cleaning equipment shall be a Crafco Crack Vacuum unit (or approved equivalent) capable of thoroughly cleaning cracks and joints to a minimum depth of 1" (25 mm). The vacuum unit shall be capable of air routing hard to clean cracks and vacuuming dust and

debris at the same time. The vacuum unit must be equipped with filtering system of 10 microns or smaller.

The crack filling material shall be a cold-applied, polymer modified petroleum emulsion (Western Emulsion Inc. "P.A.S.S." or approved equivalent) or a hot-applied rubberized asphalt (Crafco Polyflex or approved equivalent). The crack filling material must not be modified or diluted in any way.

A wand and nozzle type application shall be used to fill all cracks with crack filling material. Crack filling material shall be applied in two applications with the possibility of additional applications to fill the crack within the allowable tolerance. The cracks must be filled to the surface and not overfilled or applied to the top of adjoining pavement or concrete surfaces. The cracks shall be squeegee immediately after the sealant has been applied to insure conformity with the pavement surface. The crack filling material shall then be allowed to penetrate and sink into the crack area for a minimum of one hour. Each crack must then have a second application of crack filler material applied in the crack area only to within ± 0.01' of the adjoining pavement surface. If the material is a cold-applied, polymer modified petroleum emulsion, sand will be applied over the crack filling material after the second application, covering a minimum of 1 1/2 inches each side of the crack and not more than 3/4 inch higher than the top of the pavement. The Contractor shall be responsible for the removal of all excess sand which shall be removed within three hours after being applied.

In the areas where slurry seal will be applied, the crack sealing operations shall be completed a minimum of two (2) weeks prior to the application of slurry seal.

Areas to be crack sealed will be as designated in the field by the Engineer.

The estimated quantity shown on the plans and on the Bidding Schedule for crack seal and slurry seal shall be the final pay quantity to be paid for.

SLURRY SEAL

Slurry seal shall be performed in accordance with Subsections 203-5 and 302-4, "Emulsion-Aggregate Slurry," of the Standard Specifications, and the following Provisions.

Materials

Emulsion aggregate slurry shall be Type II. Emulsified asphalt shall be CQS-1h.

Modify the following - Subsection 203-5.2, "Materials" of the Standard Specifications;

(1) Admixtures, such as Portland Cement or aluminum sulfate may be mixed into the slurry material to adjust the curing time such that the applied slurry can support vehicular traffic within 2 hours.

(2) Use of slag shall not be permitted.

(3) Deliveries of aggregate and emulsion shall not be made without the engineer present. Emulsion is not to be transferred to an on-site storage tanker without the sieve test performed by the City.

Modify the first paragraph of Subsection 203-5.4, "Mix Design," of the Standard Specifications to include the following:

The Contractor shall submit a Mix Design for approval within fourteen (14) working days after "Notice to Submit Mix Design" is issued. The Contractor will receive a "Notice to Proceed with Construction" only after the Mix Design is approved. The Contractor shall provide materials for verification of the Mix Design. Periodically throughout the project, at the direction of the City Engineer, the City's Consultant will perform further testing as necessary to provide assurance of the Mix Design. The cost of the initial Mix Design testing and periodical testing will be borne by the City.

If the Contractor changes sources of material, i.e. aggregate and/or oil, a new Mix Design shall be resubmitted. The cost of all Mix Design retest and testing as a result of changes to the Mix Design shall be borne by the Contractor, and the amount due to the City for said retesting will be deducted from the Contractor's Progress Payments.

Prior to a change of emulsion, the Contractor shall thoroughly clean all emulsion tanks and mixing units to prevent any chemical reaction between the two emulsions.

Modify the second paragraph of Subsection 203-5.4, "Mix Design," of Standard Specifications to read as follows:

The Contractor shall allow ten (10) days prior to start of work for calibration and testing at a location designated by the Engineer. The City's testing laboratory will obtain field samples at the time of calibration for Extraction Test (ASTM D 2172), Consistency Test, Wet Track Abrasion Test (ASTM D 3910), a verification of the 60 minute set time previously specified. When the City's testing laboratory has determined that the field samples meet the requirements stipulated in these Specifications, the Engineer will notify the Contractor to start work. In the event that the product does not meet Specification, another testing and calibration date shall be set ten (10) day prior to the start of work for a complete retest of the product at the expense of the Contractor.

Polymer Modified Emulsion: Polymer modified emulsion-aggregate slurry shall conform to Table 8 below.

Asphalt emulsions shall be composed of a paving asphalt base uniformly emulsified with water and an emulsifying or stabilizing agent. Polymer modified asphalt emulsions shall also contain a polymer.

The asphalt emulsion shall be homogeneous. Within 30 days after delivery and provided separation has not been caused by freezing, the asphalt emulsion shall be homogeneous after thorough mixing. The polymer used in the manufacture of polymer modified asphaltic emulsion shall be, at the option of the Contractor, either neoprene, ethylene vinyl acetate, or a blend of butadiene and styrene.

TABLE 8

Requirements for Polymer Modified Cationic Quick Setting Emulsions (PMCQS1h)

Properties	Min.	Max.
Tests on Emulsions		
Viscosity SSF, @ 77° F	15.0	90.0
Sieve Test, %		0.3
Storage Stability, 1 day, %		1.0
Residue by Evaporation	57.0	
Particle Charge	Positive	
Tests on Residue from Evaporation Test		
Penetration, 77° F	40.0	90.0
Ductility, 77° F, cm	40.0	
Absolute Viscosity @ 140° F, poise	2,250.0	
Solubility in Trichloroethylene	97.0	
Quantitative Test for Polymer Content		
Either;		
Torsional Recovery, %	18.0	
or		
Polymer Content in Residue, wt %	2.5	3.0

The emulsion supplier shall certify that the asphalt residue contains at least 2.5 percent polymer (dry weight) and that the polymer has either been added as a solid polymer to the base asphalt, or has been added in the form of a latex at the time of emulsion manufacture.

Polymer modified emulsified asphalt shall be kept in a suspended state by an agitating mixer operated every 3 days.

The latex additive shall be Ultra Pave 70 (for anionic) or Ultra Pave 65 K (for cationic) or an approved equal. The latex shall be added at the emulsion plant after weighing the asphalt and before the addition of mixing water. The latex shall be added at a rate of **two (2)** parts to one-hundred (100) parts of emulsion by volume (or 2%).

Construction Methods for Slurry Seal

Stockpile

Prior to the beginning of slurry operations, the Contractor shall furnish, at no cost to the City, current licensed weigh master's certificates indicating the net weight capacity of the aggregate bin.

Prior to storing aggregate on private property, the Contractor shall submit to the Engineer written permission from the property owner for such stockpiling. The City may provide a

stockpile area at the City Yard, 15670 Perris Boulevard, Moreno Valley, California 92556 only after arrangements have been made with the City's Maintenance and Operations Division, at (951) 413-3160.

Precautions shall be taken to ensure that stockpiles do not become contaminated with oversized rock, clay, silt, or excessive amounts of moisture. The stockpiles shall be kept in areas that drain readily. Segregation of the aggregate will not be permitted.

The stockpile areas shall be thoroughly cleaned of all excess material and left in a neat, orderly appearance upon completion of slurry operations in any area.

Contractor shall schedule and coordinate the delivery of aggregate to the stockpile(s) such that: (1) deliveries originate at the plant and arrive at the stockpile site within normal work hours on the same calendar day, (2) delivery site and project name are explicitly stated on each delivery ticket, (3) successive deliveries on the same calendar day show the cumulative total for that day, (4) copies of all delivery tickets are delivered to the Engineer before the end of the working day, whereas any delivery tickets not so delivered may be rejected by the Engineer. Any deviation from this process must have the prior approval of the Engineer.

The Contractor is hereby advised that City streets, parking lots, or any City properties will not be allowed as a site for stockpiling and batching. Arrangements for an acceptable site shall be the sole responsibility of the Contractor.

Application

The pavement surface shall be cleaned by sweeping, flushing, or other means necessary to remove loose particles of paving, dirt, aggregate, and any other extraneous materials. This must be performed to the satisfaction of the Engineer before any slurry seal material is placed; including the placement of slurry seal test strips.

Modify the following Subsection 302-4.2.2, "Continuous-Flow Mixers," of the Standard Specifications to read as follows:

> All slurry mixing machines shall be equipped with a Fines Feeder for the adding of cement or granular Aluminum Sulfate.
>
> Transit mix trucks shall not be used.

The first paragraph of Subsection 302-4.3.1 of the Standard Specifications is hereby deleted and replaced with the following:

> The work shall consist of preparation, mixing asphaltic emulsion, aggregate, accelerator and water, and spreading the mixture on the pavement where shown on the plans. Type II slurry shall be applied at a rate yielding a minimum 1,000 square feet per extra long ton and a maximum 1,200 square feet per extra long ton.

The first sentence of Subsection 302-4.3.2 is hereby deleted and replaced with the following:

Slurry seal shall be placed only when the ambient temperature is above 50 degrees and rising. No slurry will be placed during inclement weather or the threat of. Contractor will bear the responsibility of that may arise from non-cancellation. The maximum speed of the slurry machine shall not exceed 270 feet per minute (80 meters per minute).

The spreader box shall be equipped with a suitable drag to erase ridges. A minimum 2-foot length of burlap material shall be attached to the entire width of the drag. The spreader box shall be equipped with a steering device.

The slurry spreader box shall be maintained in a good state of repair at all times. The spreader box main strike off squeegee (rubber) shall be new at the beginning of the contract and shall be maintained in a good state of repair throughout the contract.

Equipment shall be available for inspection before the beginning of the contract and again before work is to be accomplished.

Each slurry crew shall be composed, at a minimum, of a coordinator at the project site at all times, a competent quick-set mixing man, a competent driver, two squeegee men, and sufficient laborers for any handiwork and cleanup.

Prior to commencement of work, Contractor shall perform test sections for review and approval by the Engineer. The area of the test sections shall be at least 5,000 square feet. The section locations shall be in the area of the work, to be specified prior to construction. In no case will the Contractor begin operations until the test sections have adequately cured and he has received written approval by the Engineer. The approved mix design and test section shall be considered the standard for the operation.

The slurry shall be applied in such a manner that no ripples or waves exist. If ripples or waves occur in the slurry during the application, the work shall cease and the Contractor shall correct the situation. The Contractor may use a drag to knock down ridges. If ripples or waves are not corrected to the Engineer's satisfaction, the street shall be reslurried at the Contractor's expense.

No slurry seal shall be placed on a wet street or crossing without the Engineer's consent.

Intersections and commercial driveways shall be completed in two parts to allow ingress and egress to traffic. Sand may be spread over the fresh slurry only with the permission of the Engineer.

Slurry shall not be applied over any manhole, valve, survey monument, or miscellaneous frames and covers. It shall be the Contractor's responsibility to place protective covering over, or to otherwise avoid slurry seal coating of manholes, utility covers, pavement markers (reflective and non-reflective), concrete gutters, concrete cross gutters, and drainage facilities, and survey monuments. Any material used to protect such devices shall be removed and disposed of lawfully by the Contractor.

Rubber Tire Rolling - Rolling shall be performed with two complete coverages by a 12-ton nine-wheel rubber tired roller with a tire pressure of 50 psi. Rolling shall be performed after slurry and as soon as it sets up enough to support the roller and not pick up on the tires.

Areas of shade on the pavement that set up more than 10 minutes later than other areas shall be rolled separately, but as soon as they set up sufficiently to meet the requirements herein. Insufficient rubber-tire rollers to meet these requirements shall be cause for termination of slurry operations until rolling can keep pace with slurry spread.

The Contractor shall sweep the streets for two (2) consecutive days after the application of the slurry. A third and final sweeping shall be done five to eight days after the slurry is complete. Residual material picked up from the sweepings shall be removed to a legal disposal site.

The Contactor shall protect the wet slurry from traffic at all times and if damaged or defaced, the Contractor shall repair said damage at no additional cost to the City.

The placement of slurry seal may be suspended with the concurrence of the Engineer due to unsuitable weather, temperature conditions, or other conditions that are considered unfavorable for the prosecution of the work. The Contractor shall immediately comply with the order of suspension by the Engineer, and work shall not be resumed until authorized by the Engineer.

The days during which the suspension of work is in effect due to unsuitable weather shall not be considered working days and the date of completion shall be extended to allow for work and notification. In the event of a suspension of work, the Contractor shall remove all barricades, equipment and "No Parking" signs (if appropriate) upon the curing of the completed portion of slurry. No adjustment of unit prices of any items shall be allowed due to a suspension of work as described above.

It is anticipated that nuisance water, such as storm water runoff and irrigation water, will run in and across the right-of-way at various time throughout the period of construction. It shall be the responsibility of the Contractor, at their own expense, to provide for and protect the work from such water. In addition, the Contactor's responsibility shall include handling nuisance waters such that their operations do not cause them to damage existing improvements or properties adjacent to or near the site of work.

The Contractor shall, at the direction of the Engineer, repair or reseal to the entire street, or complete section thereof, as determined by the Engineer, which have not been sealed properly (includes areas that have failed to meet yield and mix design specifications) and completely. No compensation will be provided for slurry seal used in repair and reseal work.

The start and finish of slurry application shall be a straight line which, unless otherwise approved by the Engineer, shall be obtained by laying a strip of building paper or other material approved by the Engineer on the pavement surface. After application of slurry, the paper is to be removed leaving a straight edge. The entire street surface area shall be sealed the same day.

The Contractor shall sweep any raveled material on the street one (1) week after the initial placement. If the Engineer determines the raveling is excessive, the frequency of sweeping shall be adjusted to the field conditions of the raveling. If raveling continues within two (2) weeks of the initial placement, the street shall be swept and reslurried at no cost to the City. Raveling can be identified by the presence of "black pebbles" in the gutter.

Public Convenience and Traffic Control

The application of slurry shall not commence until after 8:00 a.m., and shall conclude at 1:30 p.m. unless other authorized by the Engineer. The slurry shall be sufficiently cured to be open to traffic by 4:00 p.m. The portions of streets to be slurried shall be closed from the time the application begins until the mixture as achieved sufficient set to be opened to traffic.

The spreading schedule shall list the streets in order of proposed application and denote which streets are to be completed each day.

Traffic control with ample barricades, flaggers, standard regulatory and warning signs, no parking signs, etc., shall be provided to protect the uncured slurry surface from all types of traffic. Any damage to the uncured slurry is the responsibility of the Contractor. Traffic control plan shall be submitted to and approved by the City Director of Public Works prior to commencing work. The Contractor's work will be done on successive adjacent streets during the same day of the operation. Adequate means shall be provided to protect the slurry seal from damage by traffic for a minimum of four (4) hours of application or until such time that the mixture has cured sufficiently so that the slurry seal will not adhere to and be picked up by tires of vehicles.

Temporary "No Parking" signs shall be posted at least 48 hours in advance of the work. The signs shall be placed no more than 100 feet apart on each side of the street and at shorter intervals if conditions warrant. The Contractor shall provide the signs and will be responsible for adding the dates and hours of closure to the signs, removal of the signs, and furnishing and placing of barricades, if necessary, for posting of the signs. All signs shall be removed within 48 hours after the effective date.

Contractor shall provide barricades and other traffic control devices as necessary to eliminate traffic on areas of fresh slurry that might sustain damage from such traffic. Any tracking of slurry seal on private property will be the responsibility of the Contractor to correct.

Slurry seal shall not be spread on the trash pickup day of each respective street.

Temporary striping devices shall be provided on all lane lines covered by slurry.

Measurement and Payment

The contract unit price paid per square foot (SF) for crack seal and slurry seal existing asphalt concrete pavement shall include full compensation for furnishing all labor, materials, tools, equipment, emulsion, polymer as specified, accelerator or retardant and water, and all preparation, traffic control, rubber tire rolling where specified, other incidentals described in the work and for doing all the work involved in crack sealing and slurry sealing complete in place as shown on the plans, and specifications, or as directed by the Engineer, and no additional compensation will be allowed therefore.

Full compensation for developing a water supply, for furnishing and placing all water required for work done in the Contract, including extra work shall be included in the prices paid for the various items of work requiring water; and no separate payment will be made therefore.

APPENDICES

APPENDIX A

LOCATION MAP

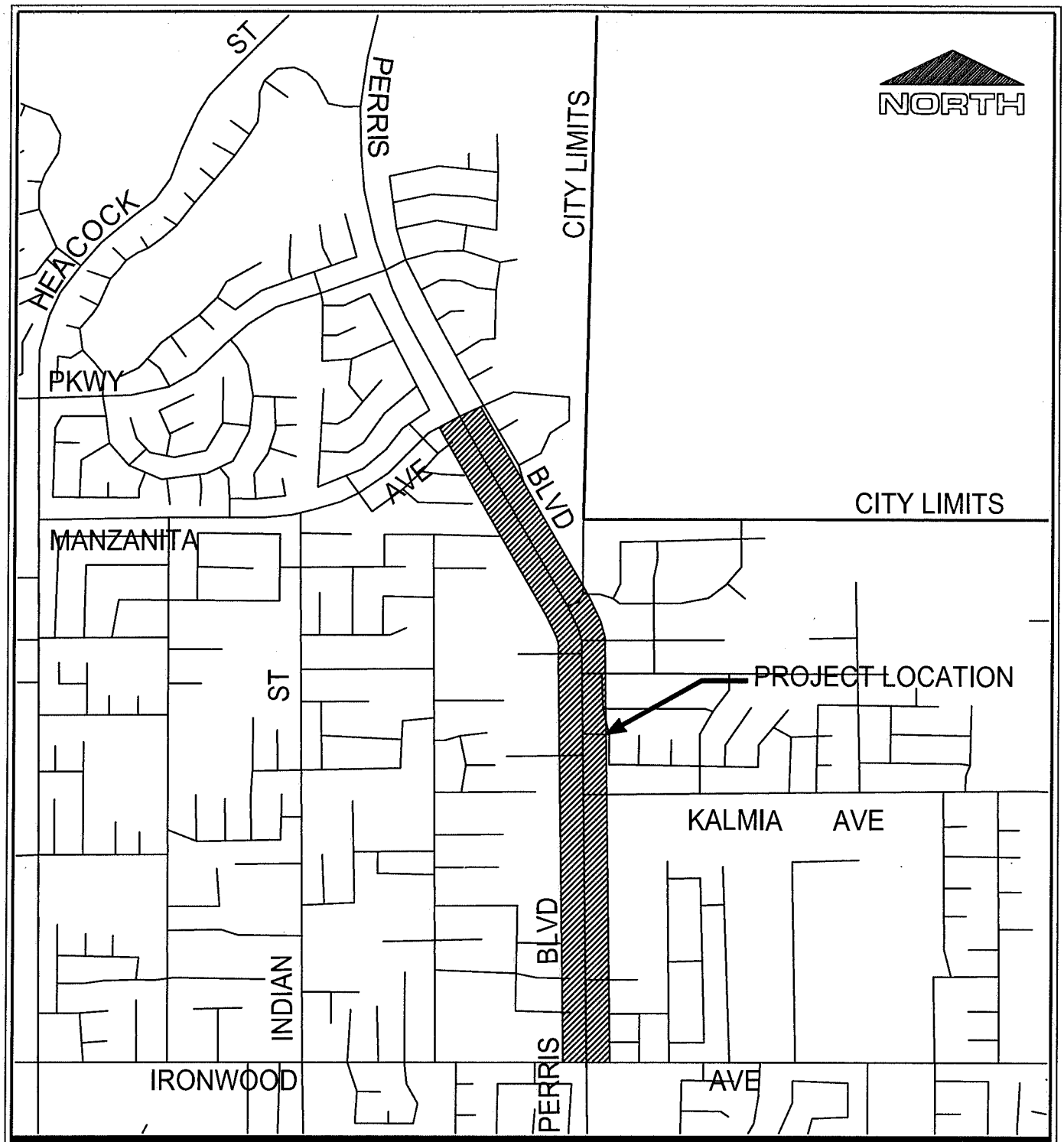

Public Works Department
Capital Projects Division

LOCATION MAP

ATTACHMENT "A"

Scale: None

PERRIS BLVD IMPROVEMENTS FROM IRONWOOD AVE TO MANZANITA AVE
PROJECT NO. 801 0024 70 77

APPENDIX B

PROJECT SIGNS

City of Moreno Valley
Road Work

Project Description
and Limits

Start - Completion Date

City Council:
<Name>, Mayor
<Name>, Mayor Pro Tem
<Name Only>
<Name Only>
<Name Only>

Moreno Valley Public Works
951.413.3130
www.moreno-valley.ca.us

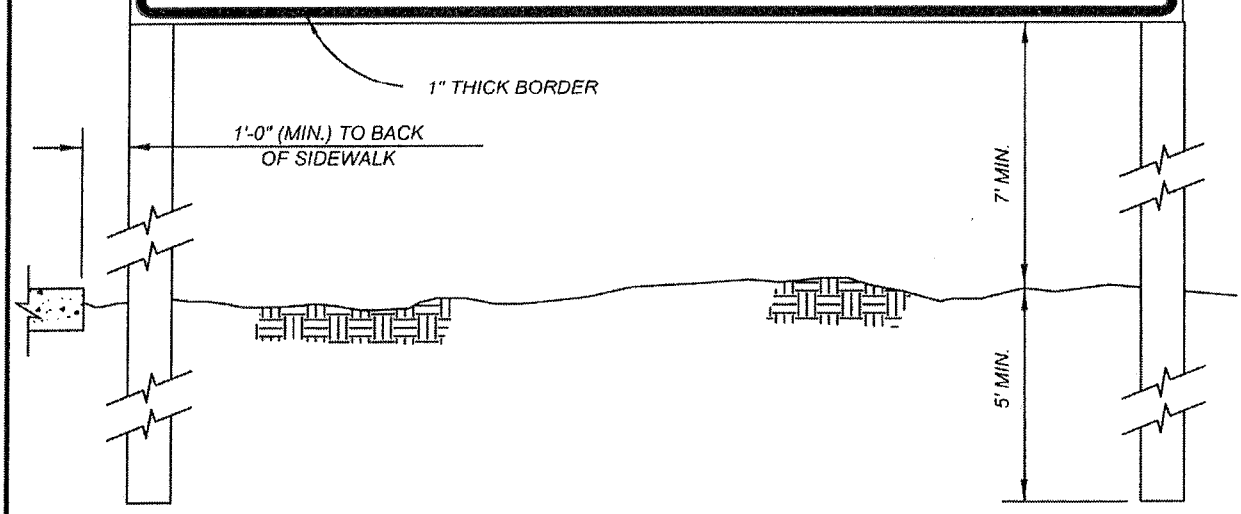

NOTES:

1.) SIGNS SHALL BE SECURELY MOUNTED ON (2) 4" x 4" POSTS.

2.) SIGNS SHALL BE MADE WITH NEW MATERIAL AND IN ONE PANEL. OUTSIDE DIMENSIONS SHALL BE 4' x 8'.

3.) LETTERS AND BORDER SHALL BE BLACK ON WHITE BACKGROUND.

4) ENGINEER TO PROVIDE PROJECT DESCRIPTION, LIMITS, NAMES OF CURRENT CITY COUNCIL MEMBERS AND GRAPHICS.

5) CITY CAN PROVIDE "PROOF" LAYOUT IN DIGITAL FORMAT.

6) CONTRACTOR / DEVELOPER TO PROVIDE FINAL "PROOF" ON 11" x 17" PAPER FROM VENDOR FOR CITY APPROVAL PRIOR TO MANUFACTURING THE SIGN.

7) CONTRACTOR / DEVELOPER TO PROVIDE PHOTOGRAPH OF ACTUAL 4' x 8' SIGN FOR CITY APPROVAL PRIOR TO INSTALLATION.

CAPITAL PROJECTS	DATE 1/13	CITY OF MORENO VALLEY PREPARED BY CAPITAL PROJECTS	
APPROVED BY PUBLIC WORKS DIRECTOR/ CITY ENGINEER	DIVISION MANAGER INITIAL	**PROJECT SIGN (ROAD WORK)**	1 of 4 NO. **412A**

City of Moreno Valley

Project Completion

Roadway Improvements

Thank you for your cooperation

City Council:
<Name>, Mayor
<Name>, Mayor Pro Tem
<Name Only>
<Name Only>
<Name Only>

Moreno Valley Public Works
951.413.3130
www.moreno-valley.ca.us

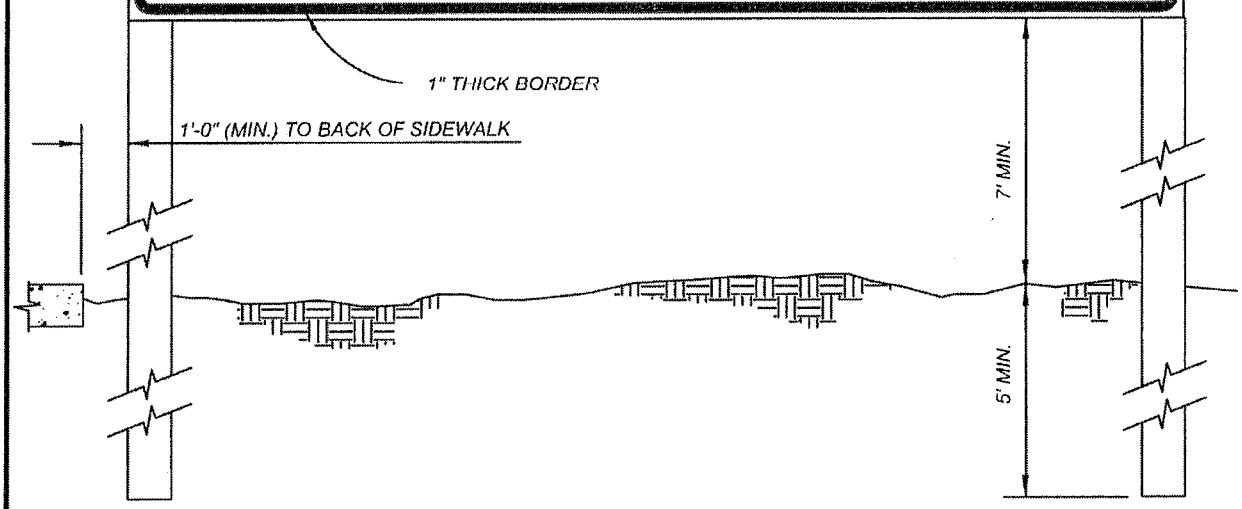

NOTES:

1.) SIGNS SHALL BE SECURELY MOUNTED ON (2) 4" x 4" POSTS.

2.) SIGNS SHALL BE MADE WITH NEW MATERIAL AND IN ONE PANEL. OUTSIDE DIMENSIONS SHALL BE 4' x 8'.

3.) LETTERS AND BORDER SHALL BE BLACK ON WHITE BACKGROUND.

4) ENGINEER TO PROVIDE PROJECT DESCRIPTION, LIMITS, NAMES OF CURRENT CITY COUNCIL MEMBERS AND GRAPHICS.

5) CITY CAN PROVIDE "PROOF" LAYOUT IN DIGITAL FORMAT.

6) CONTRACTOR / DEVELOPER TO PROVIDE FINAL "PROOF" ON 11" x 17" PAPER FROM VENDOR FOR CITY APPROVAL PRIOR TO MANUFACTURING THE SIGN.

7) CONTRACTOR / DEVELOPER TO PROVIDE PHOTOGRAPH OF ACTUAL 4' x 8' SIGN FOR CITY APPROVAL PRIOR TO INSTALLATION.

CAPITAL PROJECTS — DATE 1/13	CITY OF MORENO VALLEY PREPARED BY CAPITAL PROJECTS	
APPROVED BY PUBLIC WORKS DIRECTOR/ CITY ENGINEER	DIVISION MANAGER INITIAL	**PROJECT SIGN (PROJECT COMPLETION)**	4 of 4 NO. **412D**

APPENDIX C

CITY STANDARD PLANS

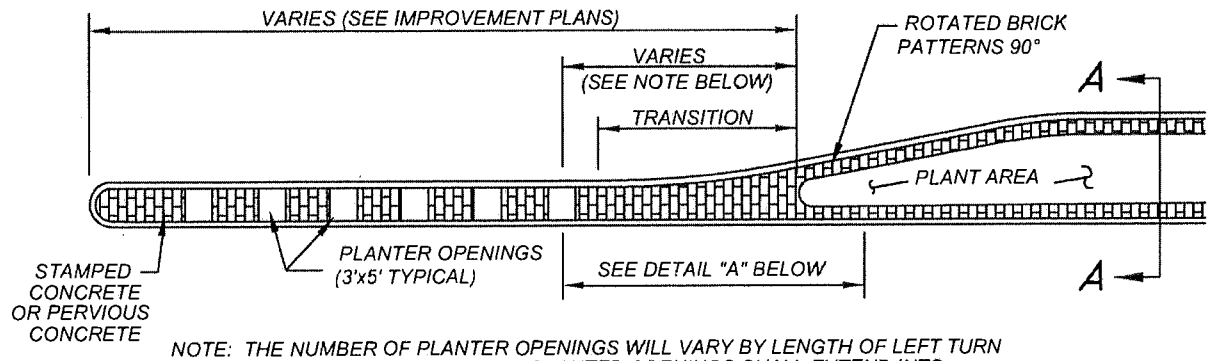

NOTE: THE NUMBER OF PLANTER OPENINGS WILL VARY BY LENGTH OF LEFT TURN OF LEFT TURN POCKET. NO PLANTER OPENINGS SHALL EXTEND INTO THE TRANSITION SEGMENT OR BE LOCATED IN MEDIANS LESS LESS THAN 5' WIDE (CURB FACE TO CURB FACE).

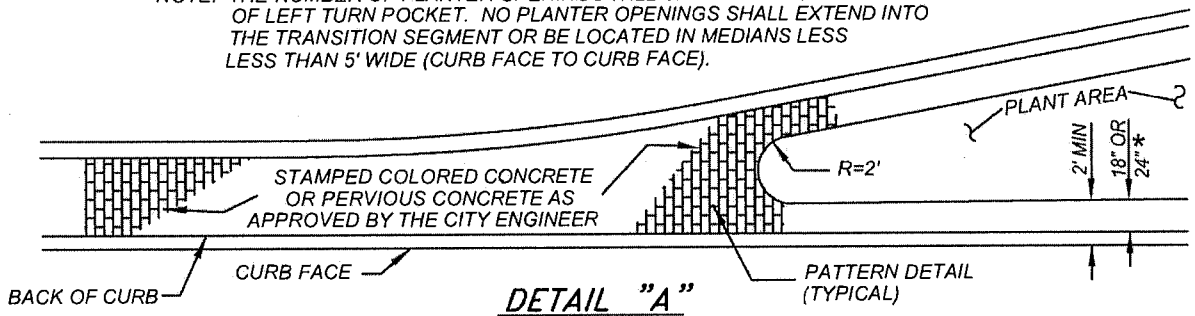

DETAIL "A"

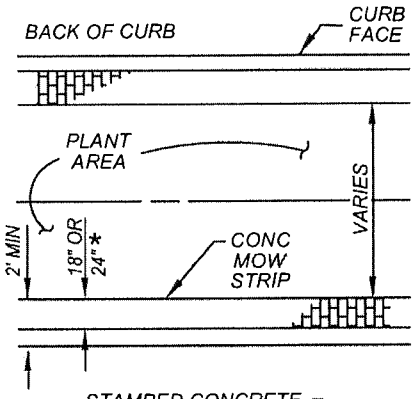

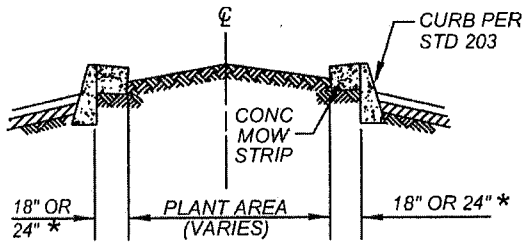

* 18" FOR 14' WIDE MEDIANS, 24" FOR 18' WIDE MEDIANS

SECTION "A–A"

LANDSCAPE OPTION
STANDARD MEDIAN SECTION (SEE STD 111)

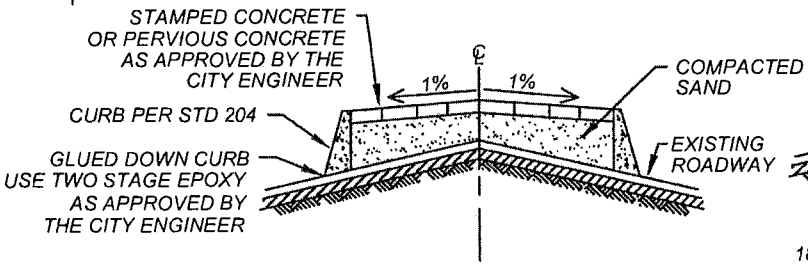

ALTERNATIVE SECTION "A–A"

GLUED DOWN OPTION WITHOUT LANDSCAPING

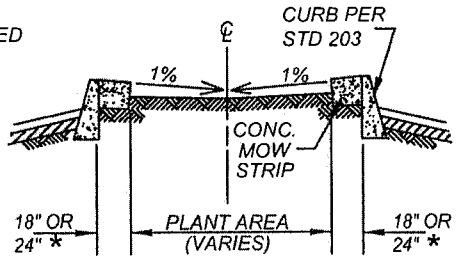

SECTION "A–A"

LANDSCAPE OPTION
ALTERNATE MEDIAN SECTION (SEE STD 111)

NOTE: SEE STANDARD 112B FOR STAMPED CONCRETE NOTES.

CAPITAL PROJECTS	DATE 1/13	CITY OF MORENO VALLEY PREPARED BY CAPITAL PROJECTS	
APPROVED BY PUBLIC WORKS DIRECTOR/ CITY ENGINEER	DIVISION MANAGER INITIAL	**MEDIAN HARDSCAPE**	1 of 2 NO. **112A**

NOTES:

1.) THE CONTRACTOR FOR THE STAMPED CONCRETE SHALL PROVIDE EVIDENCE THAT THEY ARE QUALIFIED TO AND HAS PREVIOUSLY PRODUCED SUCH TEXTURED PAVING AND CAN COMPLY WITH THE PROVISIONS SPECIFIED HEREIN. THE CONTRACTOR SHALL ALSO STIPULATE THAT THEY WILL NOT INFRINGE ON ANY APPLICABLE PATENT RIGHTS AND WILL HOLD THE CITY HARMLESS FROM ANY DAMAGES ARISING FROM PATENT INFRINGEMENT.

2.) THE CONTRACTOR SHALL SUBMIT A SAMPLE OF THE SPECIFIED STAMPED CONCRETE A MINIMUM OF 4 SF BY 4 INCHES THICK OR SHALL INDICATE TWO LOCATIONS WITHIN A 10 MILE LIMIT FROM THE CITY, WHERE THEIR PRIOR WORK OF SIMILAR STAMPED CONCRETE CAN BE OBSERVED. THE SAMPLES SHALL MEET THE APPROVAL OF THE CITY ENGINEER AND ALL WORK SHALL MATCH THE APPROVED SAMPLES.

3.) CONCRETE WORK SHALL CONFORM TO THE APPLICABLE REQUIREMENTS OF SECTIONS 200, 201, AND 303 OF THE STANDARD SPECIFICATIONS FOR PUBLIC WORKS CONSTRUCTION. ANY MODIFICATION MUST HAVE PRIOR APPROVAL.

4.) STAMPED CONCRETE SHALL BE A MINIMUM OF 4" THICK. CONCRETE MIX SHALL BE PROPORTIONED USING 560-C-3250. AN AIR-ENTRAINING AGENT CONFORMING TO ASTM C260 AND/OR A NORMAL SET OR RETARDED SET WATER REDUCING ADMIXTURE CONFORMING WITH ASTM C494 MAY BE USED. CALCIUM CHLORIDE WILL NOT BE ALLOWED. THE SLUMP SHALL NOT EXCEED 4".

5.) THE COLORING MIXTURE FOR THE STAMPED CONCRETE SHALL BE INTEGRALLY MIXED.

6.) THE COLORING MIXTURE FOR THE STAMPED CONCRETE SHALL BE AS SPECIFIED ON THE PLANS MATCHING THE CITY ENGINEER'S SELECTED AND APPROVED SAMPLE PATTERN. A TRANSLUCENT CURING COMPOUND SHALL BE APPLIED UNIFORMLY TO THE CONCRETE IMMEDIATELY AFTER FINISHING.

7.) THE CONTRACTOR SHALL DELIVER TO THE CITY ENGINEER TWO LABELS FROM THE PACKAGES CONTAINING THE SELECTED COLORING AGENT USED IN THE COURSE OF THE SPECIFIED WORK.

8.) THE CONTRACTOR SHALL BE RESPONSIBLE FOR ADJUSTING EXISTING CITY ELECTRICAL AND IRRIGATION VALVE BOXES IN ALL NEW CONCRETE AND FOR PROTECTING EXISTING IRRIGATION SYSTEMS FROM DAMAGE.

9.) THE CONTRACTOR SHALL USE THE STAMPING TOOL SPECIFIED ON THE PLANS.

CAPITAL PROJECTS DATE 1/13	CITY OF MORENO VALLEY PREPARED BY CAPITAL PROJECTS	
APPROVED BY PUBLIC WORKS DIRECTOR/ CITY ENGINEER	DIVISION MANAGER INITIAL	MEDIAN STAMPED CONCRETE GENERAL NOTES	2 of 2 NO. 112B

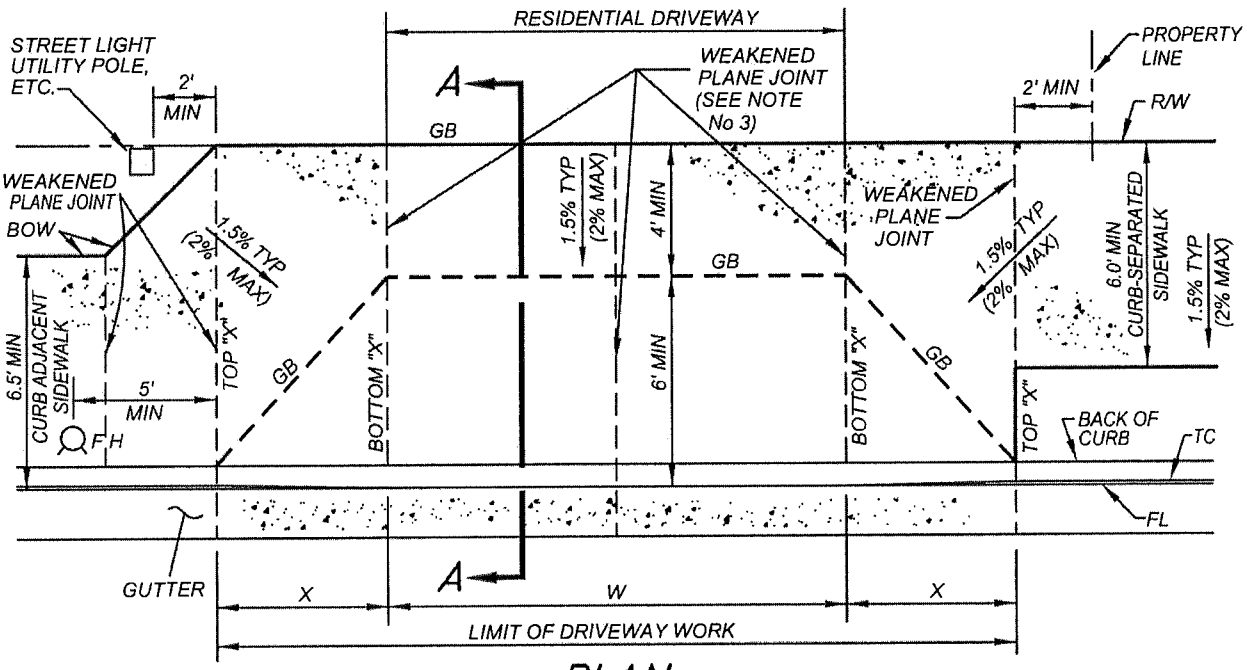

PLAN

	6" CF	8" CF
X	4'	5'

W	MIN	MAX
	12'	30'

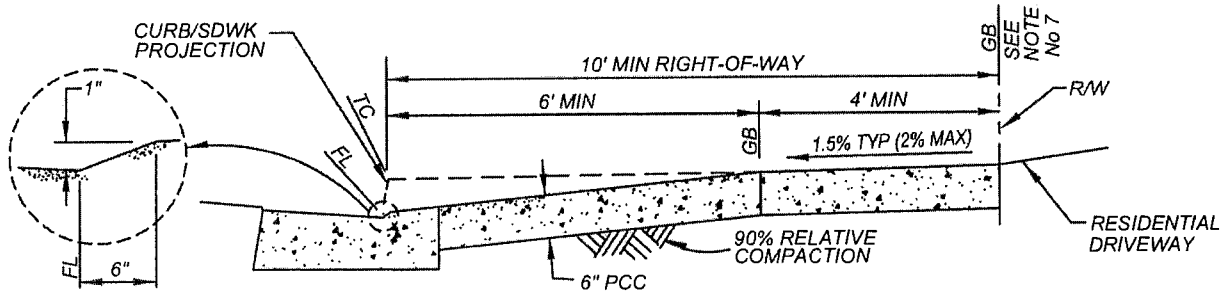

SECTION "A–A"

NOTES:

1.) ALL CONCRETE SHALL BE CLASS 560-C-3250, CURED WITH WHITE PIGMENTED CURING COMPOUND.
2.) ALL EXISTING PCC TO BE REMOVED SHALL BE SAWCUT AT THE JOINTS.
3.) DRIVEWAYS WITH 14' ≤ W ≤ 20' SHALL HAVE A MINIMUM OF 1 WEAKENED PLANE JOINT AT ½W. DRIVEWAYS WITH W > 20' SHALL HAVE WEAKENED PLANE JOINTS AT NOT TO EXCEED 5' ON CENTER. ALL DRIVEWAY WIDTHS SHALL HAVE WEAKENED PLANE LINES AT THE BOTTOM "X" LOCATION OF THE DRIVEWAY APPROACH TO CONTROL CRACKING.
4.) FOR CONSTRUCTING NEW DRIVEWAY APPROACHES ON EXISTING STREETS, A 12" WIDTH OF ASPHALT CONCRETE SHALL BE REMOVED AND REPLACED TO FULL DEPTH.
5.) DRIVEWAYS FOR CORNER LOTS SHALL BE LOCATED ADJACENT TO THE PROPERTY LINE AWAY FROM THE INTERSECTION.
6.) W DIMENSION SHALL MATCH WIDTH OF GARAGE(S) UNLESS OTHERWISE APPROVED BY THE CITY ENGINEER.
7.) 14% MAX. GRADE BREAK BETWEEN DRIVEWAY AND APPROACH.

CAPITAL PROJECTS	DATE 1/13	CITY OF MORENO VALLEY
APPROVED BY	DIVISION MANAGER INITIAL	PREPARED BY CAPITAL PROJECTS
PUBLIC WORKS DIRECTOR/ CITY ENGINEER		**RESIDENTIAL DRIVEWAY APPROACH** (FOR RIGHT-OF-WAY WIDTH BEHIND CURB OF 10' OR MORE)
		1 OF 3
		NO. **117A**

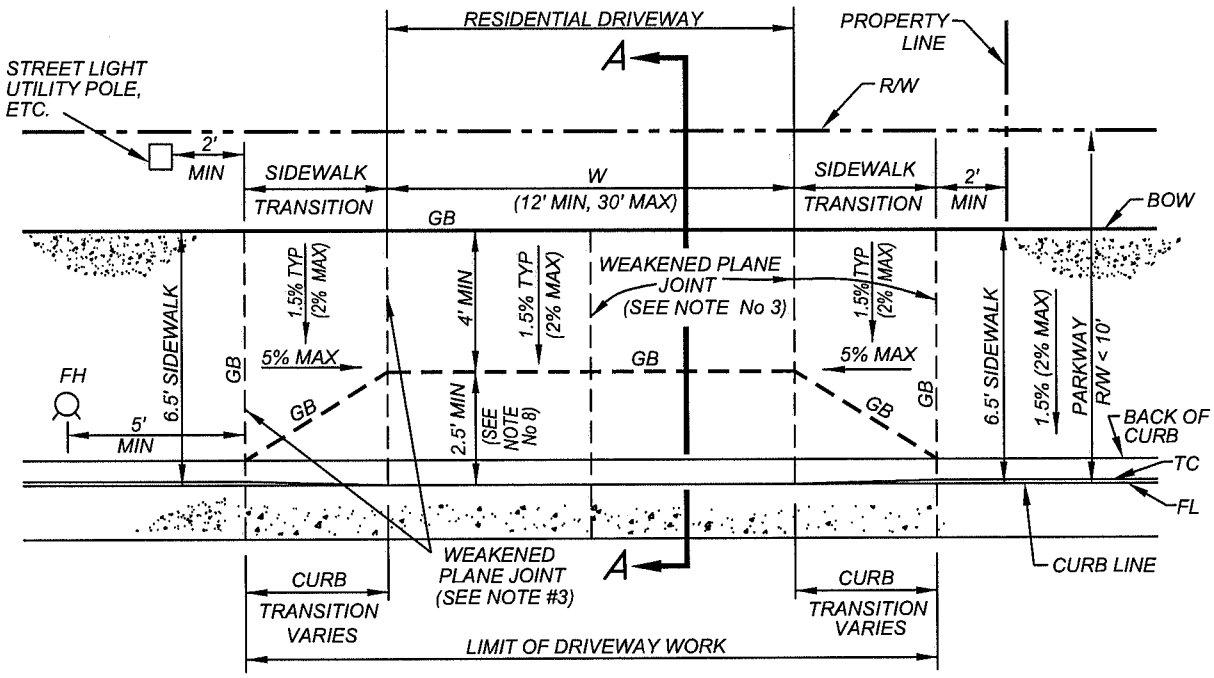

PLAN

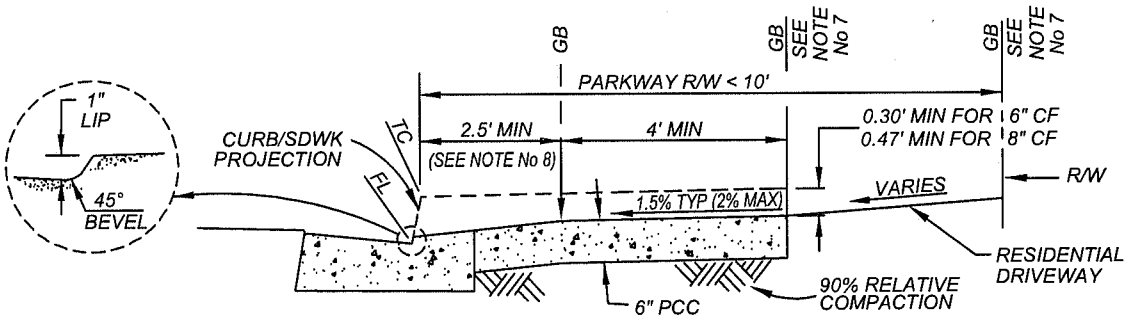

SECTION "A–A"

NOTES:

1.) ALL CONCRETE SHALL BE CLASS 560-C-3250, CURED WITH WHITE PIGMENTED CURING COMPOUND.
2.) ALL EXISTING PCC TO BE REMOVED SHALL BE SAW CUT AT THE JOINTS.
3.) DRIVEWAYS WITH 14' ≤ W ≤ 20' SHALL HAVE A MINIMUM OF 1 WEAKENED PLANE JOINT AT ½W. DRIVEWAYS WITH W > 20' SHALL HAVE WEAKENED PLANE JOINTS AT NOT TO EXCEED 5' ON CENTER. ALL DRIVEWAY WIDTHS SHALL HAVE WEAKENED PLANE JOINTS AT THE BOTH SIDES OF SIDEWALK TRANSITION SECTIONS OF THE DRIVEWAY APPROACH TO CONTROL CRACKING.
4.) FOR NEW DRIVEWAY APPROACHES ON EXISTING STREETS A 12" WIDTH OF ASPHALT CONCRETE SHALL BE REMOVED AND REPLACED TO FULL DEPTH.
5.) DRIVEWAYS FOR CORNER LOTS SHALL BE LOCATED ADJACENT TO THE PROPERTY LINE AWAY FROM THE INTERSECTION.
6.) W DIMENSION SHALL MATCH WIDTH OF GARAGE DOORS UNLESS OTHERWISE APPROVED BY THE CITY ENGINEER.
7.) 14% MAX GRADE BREAK BETWEEN DRIVEWAY AND APPROACH.
8.) THE SLOPED SECTION OF DRIVEWAY APPROACH SHOULD BE EXTENDED TO MINIMIZE THE STEEPNESS BY UTILIZING THE MAXIMUM AVAILABLE PARKWAY RIGHT-OF-WAY WIDTH.
9.) THIS STANDARD SHALL NOT BE USED FOR NEW DEVELOPMENT.

CAPITAL PROJECTS	DATE 1/12	CITY OF MORENO VALLEY PREPARED BY CAPITAL PROJECTS
APPROVED BY DEPUTY PUBLIC WORKS DIRECTOR/ ACTING CITY ENGINEER	DIVISION MANAGER INITIAL	**RESIDENTIAL DRIVEWAY APPROACH (FOR CONFINED RIGHT-OF-WAY)**
		2 OF 3 NO. **117B**

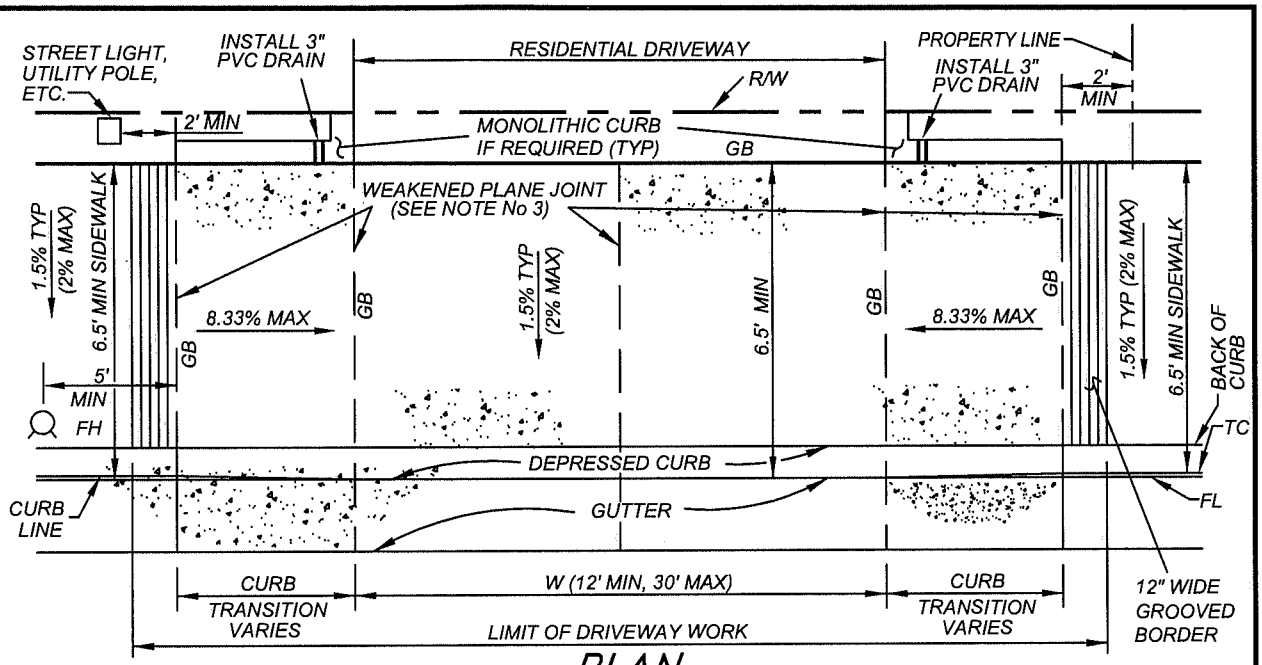

PLAN

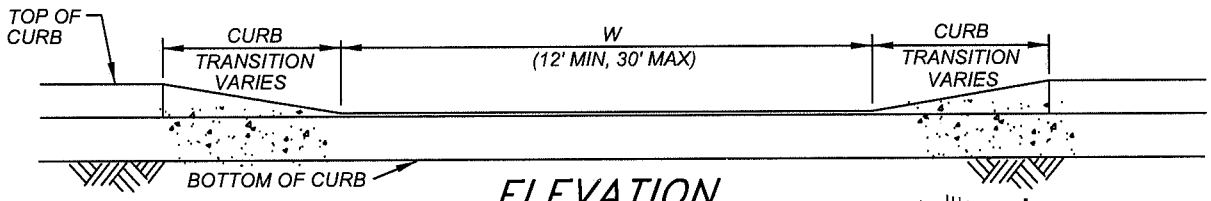

ELEVATION

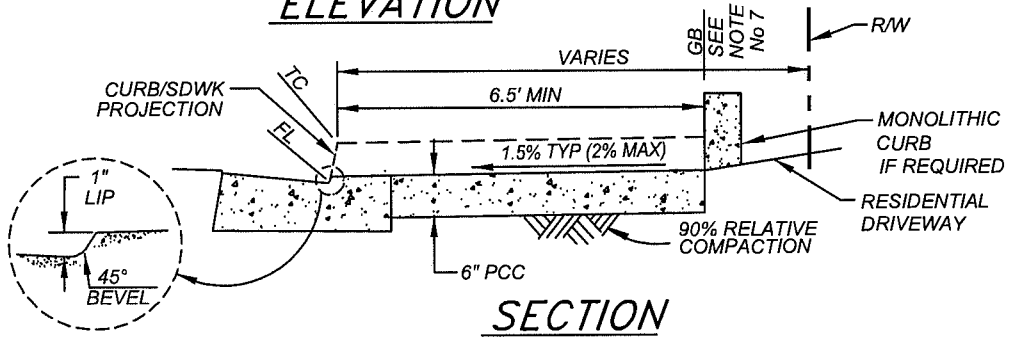

SECTION

NOTES:

1.) ALL CONCRETE SHALL BE CLASS 560-C-3250, CURED WITH WHITE PIGMENTED CURING COMPOUND.
2.) ALL EXISTING PCC TO BE REMOVED SHALL BE SAWCUT AT THE JOINTS.
3.) DRIVEWAYS WITH 14' ≤ W ≤ 20' SHALL HAVE A MINIMUM OF 1 WEAKENED PLANE JOINT AT ½W. DRIVEWAYS WITH W > 20' SHALL HAVE WEAKENED PLANE JOINTS AT NOT TO EXCEED 5' ON CENTER. ALL DRIVEWAY WIDTHS SHALL HAVE WEAKENED PLANE LINES AT BOTH SIDES OF "CURB TRANSITIONS" SECTIONS OF THE DRIVEWAY APPROACH TO CONTROL CRACKING.
4.) FOR NEW DRIVEWAY APPROACHES ON EXISTING STREETS A 12" WIDTH OF ASPHALT CONCRETE SHALL BE REMOVED AND REPLACED TO FULL DEPTH.
5.) DRIVEWAYS FOR CORNER LOTS SHALL BE LOCATED ADJACENT TO THE PROPERTY LINE AWAY FROM THE INTERSECTION.
6.) W DIMENSION SHALL MATCH WIDTH OF GARAGE DOORS UNLESS OTHERWISE APPROVED BY THE CITY ENGINEER.
7.) 14% MAXIMUM GRADE BREAK BETWEEN DRIVEWAY AND APPROACH.

CAPITAL PROJECTS	DATE 1/12	CITY OF MORENO VALLEY PREPARED BY CAPITAL PROJECTS	
APPROVED BY DEPUTY PUBLIC WORKS DIRECTOR/ ACTING CITY ENGINEER	DIVISION MANAGER INITIAL	**RESIDENTIAL DRIVEWAY APPROACH (FOR CONFINED RIGHT-OF-WAY)**	3 OF 3 NO. **117C**

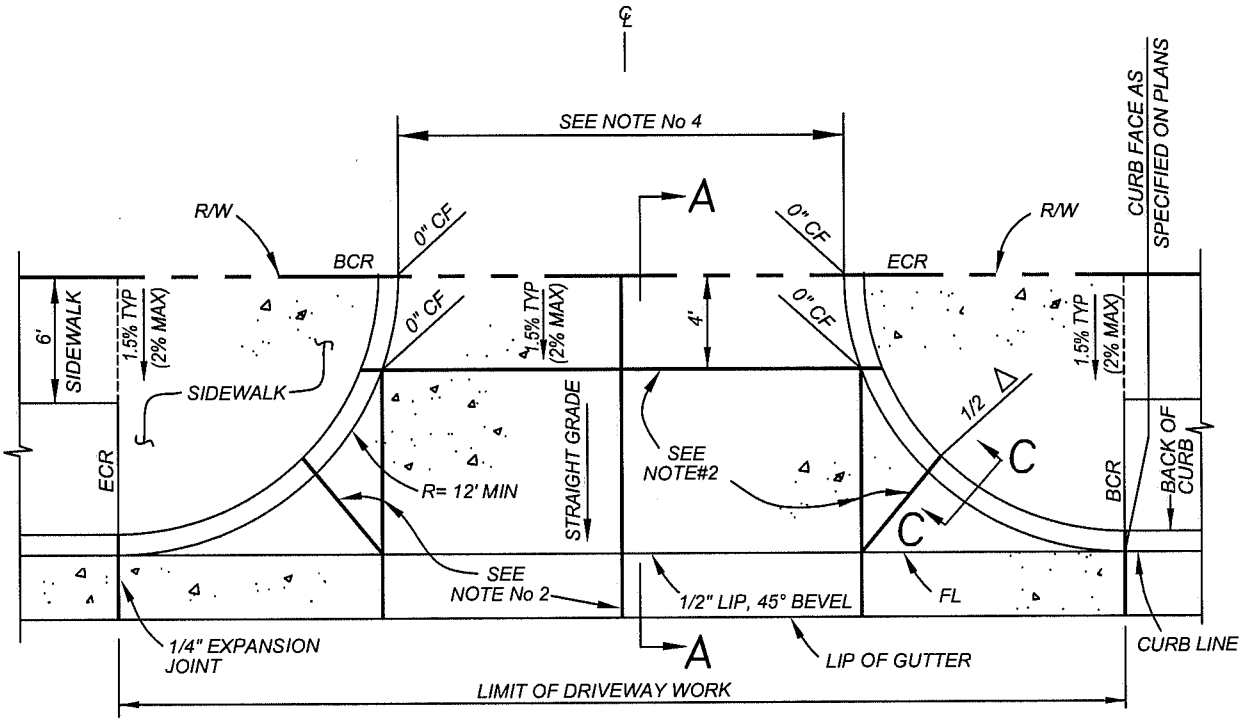

PLAN VIEW

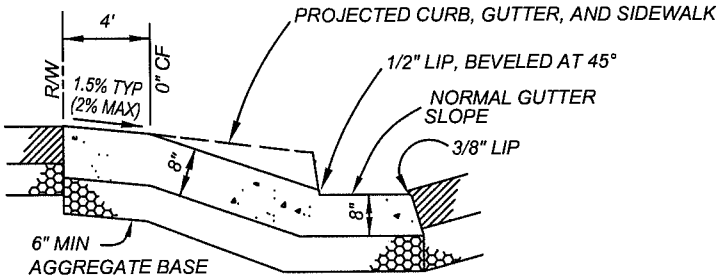

SECTION A-A

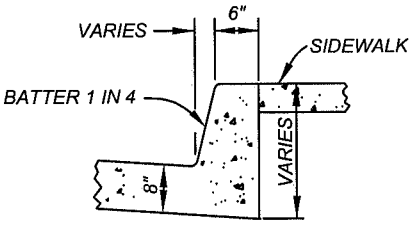

SECTION C-C

NOTES:

1.) TYPE I APPROACH MAY BE USED WHEN SIDEWALK IS ADJACENT TO PROPERTY LINE.

2.) WEAKENED PLANE JOINTS ARE REQUIRED AT CENTERLINE OF APPROACH AND AT LOCATIONS AS SHOWN, SPACED 10' MAXIMUM AND AS NECESSARY.

3.) CONCRETE SHALL BE CLASS 560-C-3250, CURED WITH WHITE PIGMENTED CURING COMPOUND.

4.) MINIMUM WIDTH SHALL BE 24', MAXIMUM WIDTH SHALL BE 40'.

5.) 4' LONG #4 SMOOTH ROUND BARS SHALL BE USED WHEN DRIVEWAY APPROACH IS NOT POURED MONOLITHIC.

6.) FOR NEW DRIVEWAY APPROACHES ON EXISTING STREETS A 12" WIDTH OF ASPHALT CONCRETE SHALL BE REMOVED AND REPLACED TO FULL DEPTH.

CAPITAL PROJECTS	DATE 1/12	CITY OF MORENO VALLEY PREPARED BY CAPITAL PROJECTS
APPROVED BY DEPUTY PUBLIC WORKS DIRECTOR/ ACTING CITY ENGINEER	DIVISION MANAGER INITIAL	**COMMERCIAL DRIVEWAY APPROACH: TYPE I** (NOT TO BE USED FOR NEW DEVELOPMENT)
		1 of 4 NO. **118A**

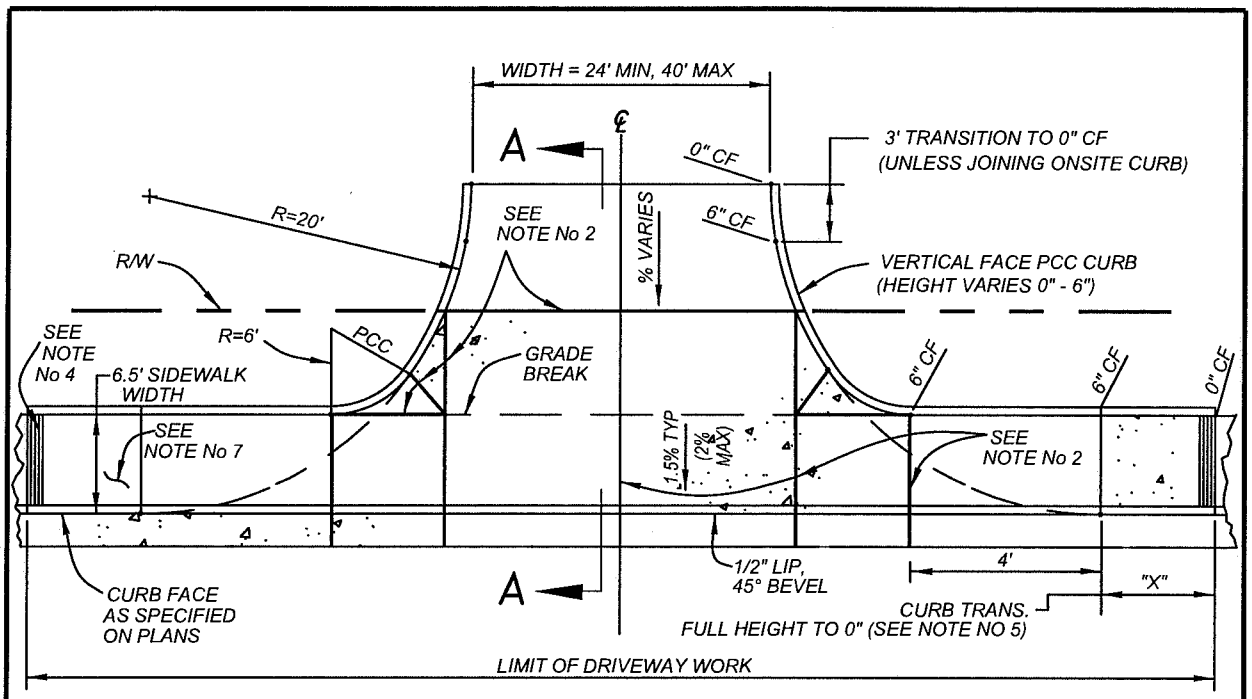

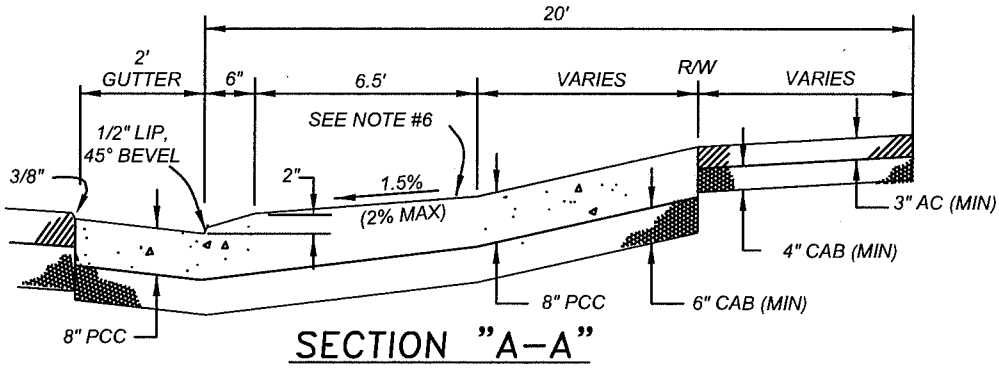

SECTION "A–A"

NOTES:

1.) TYPE II APPROACH SHALL BE USED INSTEAD OF TYPE III OR TYPE IV APPROACH FOR SITES REQUIRING SMALL SEMITRAILER (AASHTO DESIGN VEHICLE WB-40) ACCESS.
2.) WEAKENED PLANE JOINTS ARE REQUIRED AT CENTERLINE OF APPROACH AND AT LOCATIONS AS SHOWN, SPACED 10' MAX AND AS NECESSARY.
3.) CONCRETE SHALL BE CLASS 560-C-3250, CURED WITH WHITE PIGMENTED CURING COMPOUND.
4.) TOP OF SIDEWALK RAMP SHALL HAVE 12" WIDE BORDER WITH GROOVES $\frac{1}{4}$" DEEP, WITH $\frac{1}{8}$" RADIUS, AND SPACED AT $\frac{3}{4}$" OC.
5.) "X" SHALL HAVE A MAXIMUM SLOPE OF 1:12 (8.33%), AND A MINIMUM SLOPE OF 1:15 (6.67%).
6.) RAMP SURFACE SHALL BE SLIP-RESISTANT AND SHALL BE OF CONTRASTING FINISH FROM ADJACENT SIDEWALK (ROUGH BROOM FINISH OR EQUIVALENT).
7.) ALL ACCESS RAMPS SHALL BE CONSTRUCTED TO THE MOST CURRENT REQUIREMENT OF THE AMERICANS WITH DISABILITIES ACT (ADA) STANDARDS/CALIFORNIA CODE OF REGULATIONS TITLE 24-ACCESSIBILITY REGULATIONS. ADJUSTMENTS SHALL BE MADE IN THE FIELD TO ACHIEVE RAMP CONDITIONS.
8.) 4' LONG #4 SMOOTH ROUND BARS SHALL BE USED WHEN DRIVEWAY APPROACH IS NOT POURED MONOLITHIC.

CAPITAL PROJECTS — DATE 1/12	CITY OF MORENO VALLEY PREPARED BY CAPITAL PROJECTS	
APPROVED BY DEPUTY PUBLIC WORKS DIRECTOR/ ACTING CITY ENGINEER	DIVISION MANAGER INITIAL	COMMERCIAL DRIVEWAY APPROACH: TYPE II
		2 OF 4 NO. 118B

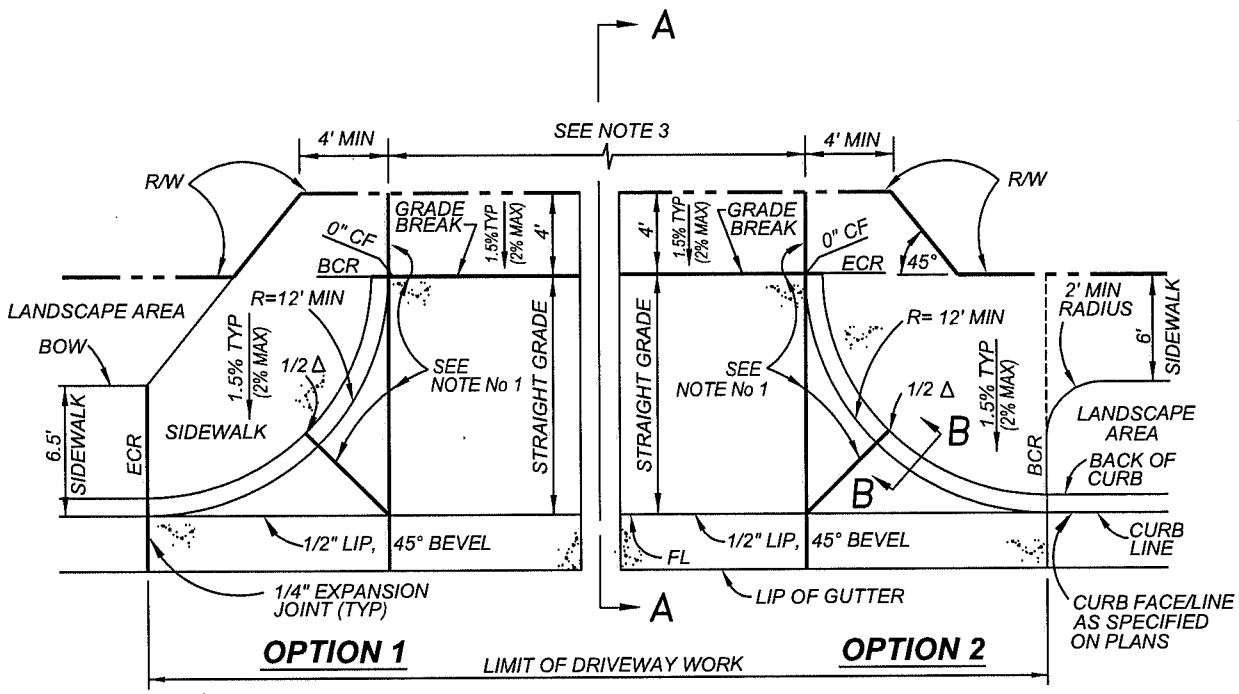

PLAN VIEW

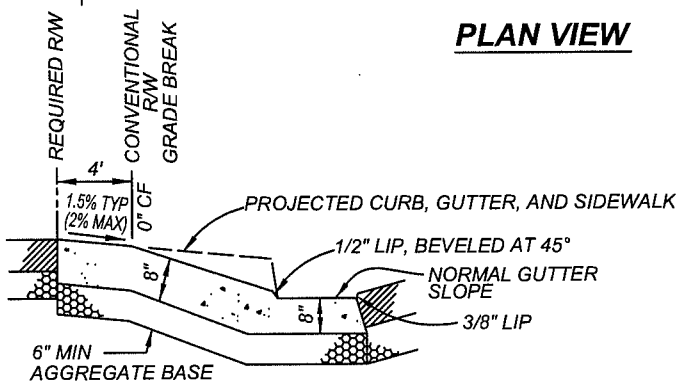

SECTION A-A

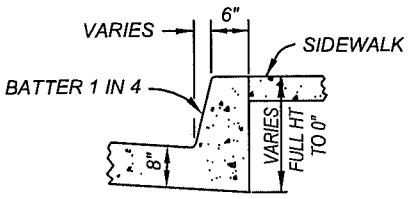

SECTION B-B

NOTES:

1.) WEAKENED PLANE JOINT REQUIRED AT CENTERLINE OF APPROACH AND AT LOCATIONS AS SHOWN, SPACED 10' MAX AS NECESSARY.

2.) CONCRETE SHALL BE CLASS 560-C-3250, CURED WITH WHITE PIGMENTED CURING COMPOUND.

3.) MINIMUM WIDTH SHALL BE 24', MAXIMUM WIDTH SHALL BE 40'.
THIS STANDARD MIGHT BE USED FOR BIKEWAY APPROACHES IN PARKS WITH WIDTH SHALL BE 16' ONLY.

4.) TYPE III APPROACH FOR PARKS AND TRAILS SHALL INCLUDE #4 REBARS AT 18" ON CENTER (2 DIRECTIONS).

5.) 4' LONG #4 SMOOTH ROUND BARS SHALL BE USED WHEN DRIVEWAY APPROACH IS NOT POURED MONOLITHIC.

CAPITAL PROJECTS	DATE 1/12	CITY OF MORENO VALLEY PREPARED BY CAPITAL PROJECTS
APPROVED BY DEPUTY PUBLIC WORKS DIRECTOR/ ACTING CITY ENGINEER	DIVISION MANAGER INITIAL	**COMMERCIAL DRIVEWAY APPROACH: TYPE III** (FOR NEW DEVELOPMENT)
		3 OF 4 NO. **118C**

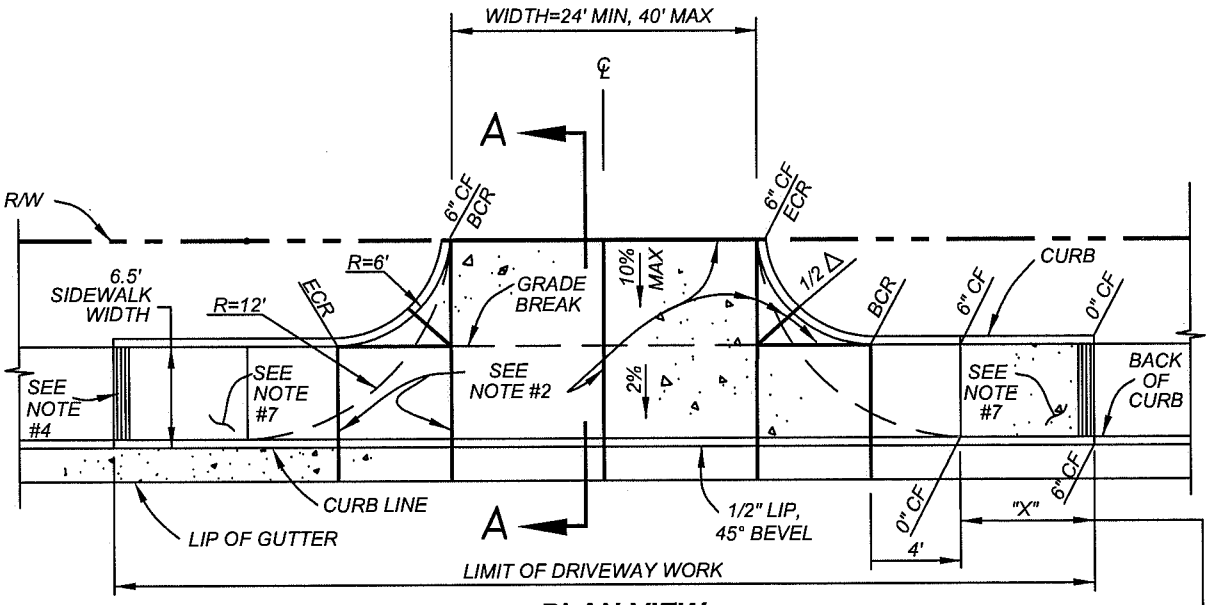

PLAN VIEW

CURB TRANS.
FULL HEIGHT TO 0"
SEE NOTE #5

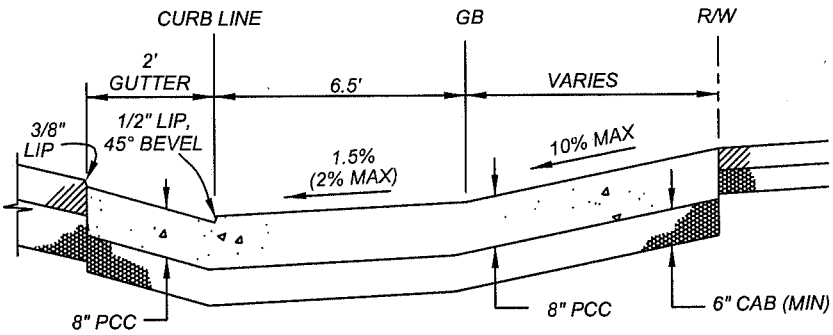

SECTION "A-A"

NOTES:

1.) TYPE IV APPROACH SHALL BE USED WHEN SIDEWALK IS ADJACENT TO CURB AND RIGHT-OF-WAY IS NOT AVAILABLE TO BUILD A TYPE III APPROACH.
2.) WEAKENED PLANE JOINT REQUIRED AT CENTERLINE OF APPROACH AND AT LOCATIONS AS SHOWN, SPACED 10' MAX. AND AS NECESSARY.
3.) CONCRETE SHALL BE CLASS 560-C-3250, CURED WITH WHITE PIGMENTED CURING COMPOUND.
4.) TOP OF SIDEWALK RAMP SHALL HAVE A 12" WIDE BORDER WITH GROOVES $\frac{1}{4}$" DEEP, WITH $\frac{1}{8}$" RADIUS, AND SPACED AT $\frac{3}{4}$" OC.
5.) "X" SHALL HAVE A MAXIMUM SLOPE OF 1:12 (8.33%), AND A MINIMUM SLOPE OF 1:15 (6.67%).
6.) RAMP SURFACE SHALL BE SLIP-RESISTANT AND SHALL BE OF CONTRASTING FINISH FROM ADJACENT SIDEWALK (ROUGH BROOM FINISH OR EQUIVALENT).
7.) ALL ACCESS RAMPS SHALL BE CONSTRUCTED TO THE MOST CURRENT REQUIREMENT OF THE AMERICANS WITH DISABILITIES ACT (ADA) STANDARDS/CALIFORNIA CODE OF REGULATIONS TITLE 24-ACCESSIBILITY REGULATIONS. ADJUSTMENTS SHALL BE MADE IN THE FIELD TO ACHIEVE RAMP CONDITIONS.
8.) FOR NEW DRIVEWAY APPROACHES ON EXISTING STREETS A 12" WIDTH OF ASPHALT CONCRETE SHALL BE REMOVED AND REPLACED TO FULL DEPTH.

CAPITAL PROJECTS	DATE 1/12	CITY OF MORENO VALLEY PREPARED BY CAPITAL PROJECTS	
APPROVED BY	DIVISION MANAGER INITIAL		4 OF 4
DEPUTY PUBLIC WORKS DIRECTOR/ ACTING CITY ENGINEER		**COMMERCIAL DRIVEWAY APPROACH: TYPE IV**	NO. **118D**

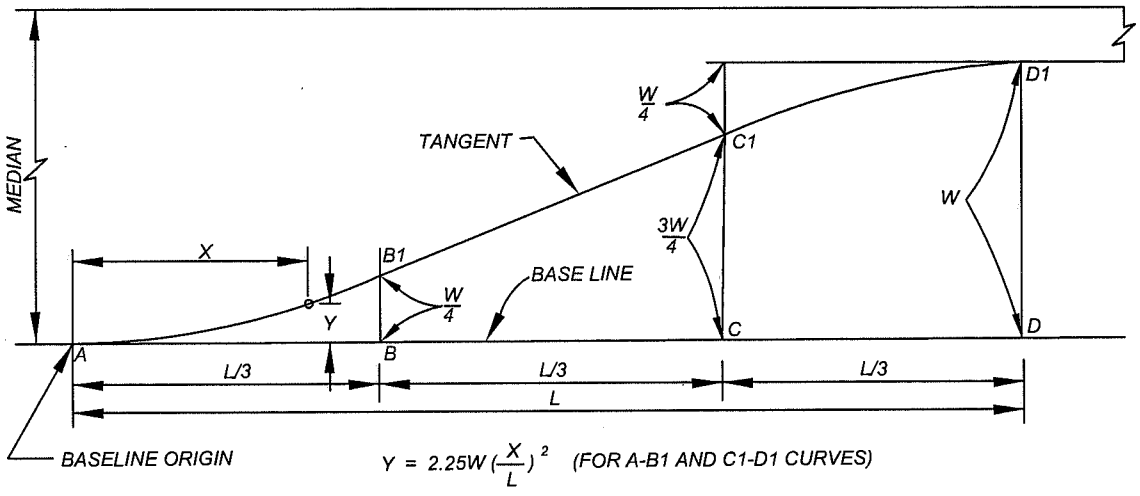

$$Y = 2.25W\left(\frac{X}{L}\right)^2 \quad \text{(FOR A-B1 AND C1-D1 CURVES)}$$

L = LENGTH OF TAPER
W = MAXIMUM OFFSET DISTANCE FROM BASELINE
X = DISTANCE ALONG BASELINE FROM ORIGIN
Y = OFFSET FROM BASELINE

L	**DISTANCE X**											
60'	5'	10'	15'	20'	25'	30'	35'	40'	45'	50'	55'	60'
72'	6'	12'	18'	24'	30'	36'	42'	48'	54'	60'	66'	72'
90'	7.5'	15'	22.5'	30'	37.5'	45'	52.5'	60'	67.5'	75'	82.5'	90'
120'	10'	20'	30'	40'	50'	60'	70'	80'	90'	100'	110'	120'
180'	15'	30'	45'	60'	75'	90'	105'	120'	135'	150'	165'	180'
W	**OFFSET Y**											
10'	0.16'	0.62'	1.41'	2.50'	3.75'	5.00'	6.25'	7.50'	8.59'	9.38'	9.84'	10.00'
11'	0.17'	0.69'	1.55'	2.75'	4.13'	5.50'	6.88'	8.25'	9.45'	10.31'	10.83'	11.00'
12'	0.19'	0.75'	1.69'	3.00'	4.50'	6.00'	7.50'	9.00'	10.31'	11.25'	11.81'	12.00'
22'	0.34'	1.38'	3.09'	5.50'	8.25'	11.00'	13.75'	16.50'	18.91'	20.63'	21.66'	22.00'
24'	0.38'	1.50'	3.38'	6.00'	9.00'	12.00'	15.00'	18.00'	20.63'	22.50'	23.63'	24.00'

NOTES:

1.) TO DETERMINE OFFSET DISTANCE FOR ANY LENGTH OF TAPER USE THE FORMULA $Y=2.25W(X/L)^2$ FOR THE PORTIONS A-B1 AND C1-D1 WHICH ARE PARABOLIC CURVES. THE PORTION B1-C1 IS A TANGENT. WHEN THE BASE LINE IS CURVED, THE OFFSETS ARE APPLIED TO THE CURVED BASE LINE, AND B1-C1 IS NO LONGER A TANGENT.

CAPITAL PROJECTS	DATE 1/10	CITY OF MORENO VALLEY
APPROVED BY	DIVISION MANAGER INITIAL	PREPARED BY CAPITAL PROJECTS
PUBLIC WORKS DIRECTOR/ CITY ENGINEER		**MEDIAN TAPER**
		1 of 1
		NO. **127**

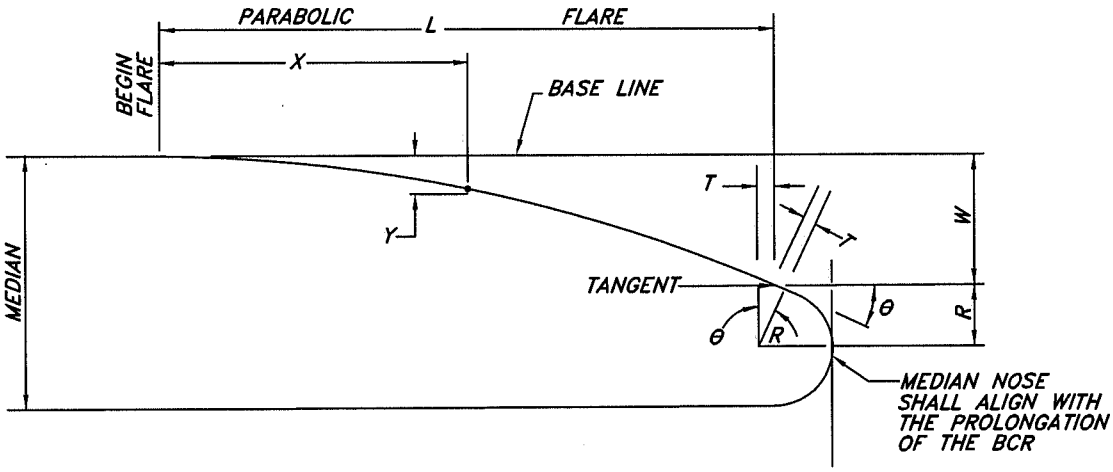

$$Y=W\left(\frac{X}{L}\right)^2$$

L=LENGTH OF FLARE IN FEET, PER PLAN
W=MAXIMUM OFFSET DISTANCE IN FEET, PER PLAN
X=DISTANCE ALONG BASELINE IN FEET
Y=OFFSET FROM BASELINE IN FEET

$$TAN\ \theta=\frac{2W}{L}$$

$$T=R\ TAN\frac{\theta}{2}$$

T=TANGENT
R=RADIUS OF NOSE IN FEET
θ = MAXIMUM FLARE DEFLECTION ANGLE

OFFSET Y

L \ X	10'	15'	20'	25'	30'	40'	45'	50'	60'	70'	75'	80'	90'	100'
FOR W/L=1:5														
25'	0.80'	1.80'	3.20'	5.00'										
50'	0.40'	0.90'	1.60'	2.50'	3.60'	6.40'	8.10'	10.00'						
FOR W/L=1:10														
50'	0.20'	0.45'	0.80'	1.25'	1.80'	3.20'	4.05'	5.00'						
100'	0.10'	0.23'	0.40'	0.63'	0.90'	1.60'	2.03'	2.50'	3.60'	4.90'	5.63'	6.40'	8.10'	10.00'
FOR W/L=1:15														
45'	0.15'	0.33'	0.59'	0.93'	1.33'	2.37'	3.00'							
75'	0.09'	0.20'	0.36'	0.56'	0.80'	1.42'	1.80'	2.22'	3.20'	4.36'	5.00'			
90'	0.07'	0.17'	0.30'	0.46'	0.67'	1.19'	1.50'	1.85'	2.67'	3.63'	4.17'	4.74'	6.00'	

NOTES:

1.) IF STATION OF RADIUS POINT IS NOT GIVEN ON PLAN, TANGENT , T, MAY BE IGNORED. PLANS SHALL SPECIFY L AND W.

CAPITAL PROJECTS DATE 1/12	CITY OF MORENO VALLEY PREPARED BY CAPITAL PROJECTS	
APPROVED BY DEPUTY PUBLIC WORKS DIRECTOR/ ACTING CITY ENGINEER	DIVISION MANAGER INITIAL	MEDIAN FLARE
		1 of 1 NO. 128

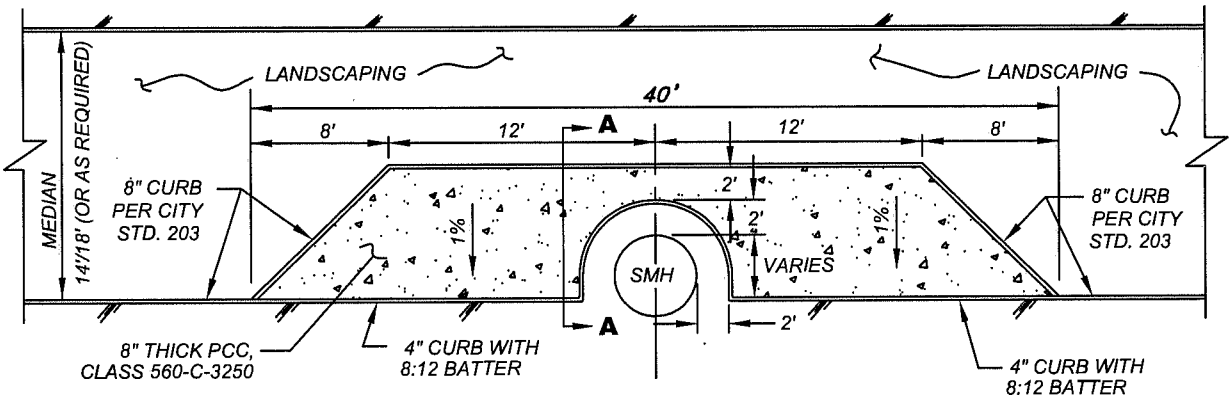

CASE I

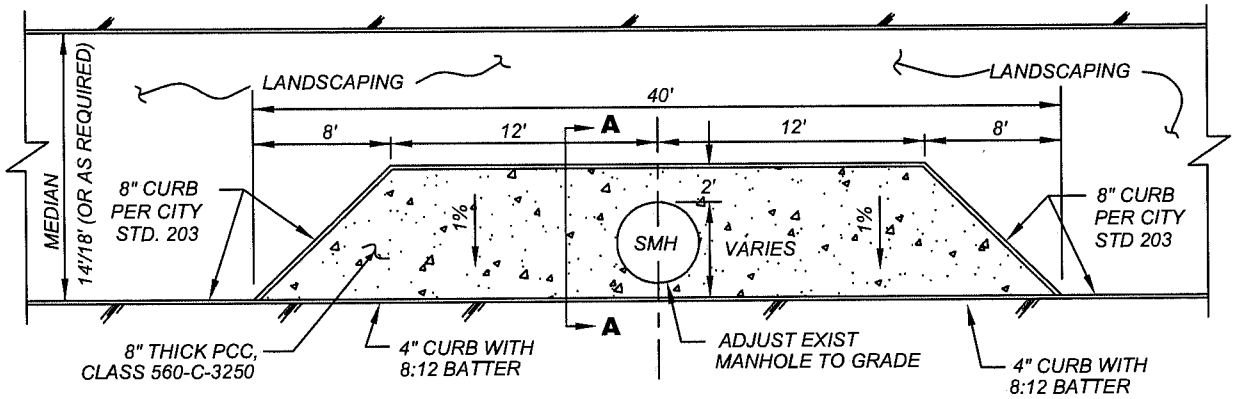

CASE II

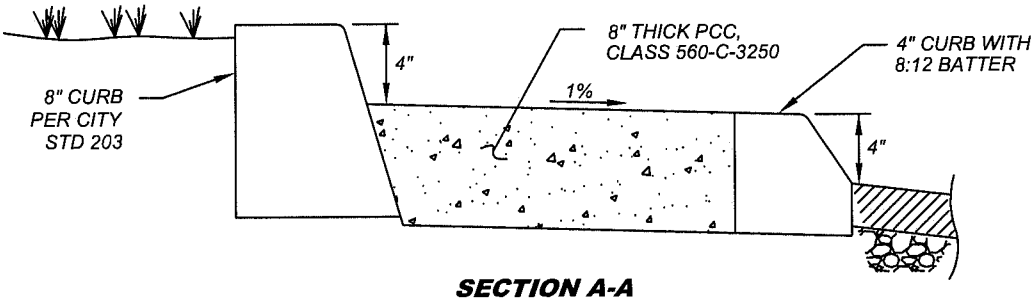

SECTION A-A

LAND DEVELOPMENT	DATE 01/11	CITY OF MORENO VALLEY PREPARED BY CAPITAL PROJECTS
APPROVED BY PUBLIC WORKS DIRECTOR/ CITY ENGINEER	DIVISION MANAGER INITIAL	**MANHOLE/CURB CONFLICT WITH MEDIAN ACCESS**
		1 of 2 NO. **133A**

NOTES:

1.) SEE STD. 203 FOR TYPE "8A" CURB.

2.) ALL LANDSCAPE, IRRIGATION, AND DRAINAGE PLANS AND DEVICES SHALL BE APPROVED BY THE CITY PRIOR TO INSTALLATION.

3.) THE LANDSCAPE PLAN SHALL MINIMIZE RUNOFF TO THE PAVEMENT.

4.) MODIFICATIONS TO THIS STANDARD MAY BE MADE BY THE CITY ENGINEER.

5.) CONSTRUCT TRANSVERSE AND LONGITUDINAL WEAKENED - PLANE JOINTS IN CONCRETE PAD AT APPROXIMATELY 10' INTERVALS.

6.) CONCRETE SHALL BE CLASS 560-C-3250. AN AIR-ENTRAINING AGENT CONFORMING TO ASTM C260 AND/OR A NORMAL SET OR RETARDED SET WATER REDUCING ADMIXTURE CONFORMING WITH ASTM C494 MAY BE USED. CALCIUM CHLORIDE WILL NOT BE ALLOWED. THE SLUMP SHALL NOT EXCEED 4".

7.) THE CONTRACTOR FOR THE STAMPED CONCRETE SHALL PROVIDE CONCLUSIVE PROOF THAT THEY ARE QUALIFIED TO AND HAS PREVIOUSLY PRODUCED SUCH TEXTURED PAVING AND CAN COMPLY WITH THE PROVISIONS SPECIFIED HEREIN. THE CONTRACTOR SHALL ALSO STIPULATE THAT THEY WILL NOT INFRINGE ON ANY APPLICABLE PATENT RIGHTS AND WILL HOLD THE CITY HARMLESS FROM ANY DAMAGES ARISING FROM PATENT INFRINGEMENT.

8.) THE CONTRACTOR SHALL SUBMIT A SAMPLE OF THE SPECIFIED STAMPED CONCRETE A MINIMUM OF 4 S.F. BY 4 INCHES OR SHALL INDICATE TWO LOCATIONS WITHIN A 10 MILE LIMIT FROM THE CITY, WHERE THEIR PRIOR WORK OF SIMILAR STAMPED CONCRETE CAN BE OBSERVED. THE SAMPLES SHALL MEET THE APPROVAL OF THE CITY ENGINEER AND ALL WORK SHALL MATCH THE APPROVED SAMPLES.

9.) THE COLORING MIXTURE FOR THE STAMPED CONCRETE SHALL BE INTEGRALLY MIXED.

10.) THE COLORING MIXTURE FOR THE STAMPED CONCRETE SHALL BE "BRICK RED" NO. 160, BY DAVIS COLORS, OR APPROVED EQUAL, MATCHING THE CITY ENGINEER'S SELECTED AND APPROVED SAMPLE PATTERN. A TRANSLUCENT CURING COMPOUND SHALL BE APPLIED UNIFORMLY TO THE CONCRETE IMMEDIATELY AFTER FINISHING.

11.) THE CONTRACTOR SHALL DELIVER TO THE CITY ENGINEER (FOR APPROVAL PRIOR TO INSTALLATION) TWO LABELS FROM THE PACKAGES CONTAINING THE SELECTED COLORING AGENT USED IN THE COURSE OF THE SPECIFIED WORK.

12.) FOR CASE I, MH IN CURB LINE, THE CONTRACTOR SHALL CONSTRUCT 4" HIGH CURB AROUND MANHOLE RIM WITH A 2' OFFSET

13.) FOR CASE II, MH WITHIN MEDIAN, THE CONTRACTOR SHALL RAISE MANHOLE RIM TO PROPOSED GRADE OF MEDIAN HARDSCAPE.

LAND DEVELOPMENT	DATE 1/08	CITY OF MORENO VALLEY PREPARED BY CAPITAL PROJECTS
APPROVED BY PUBLIC WORKS DIRECTOR/ CITY ENGINEER	DIVISION MANAGER INITIAL	**MANHOLE/CURB CONFLICT WITH MEDIAN ACCESS**
		2 of 2 NO. **133B**

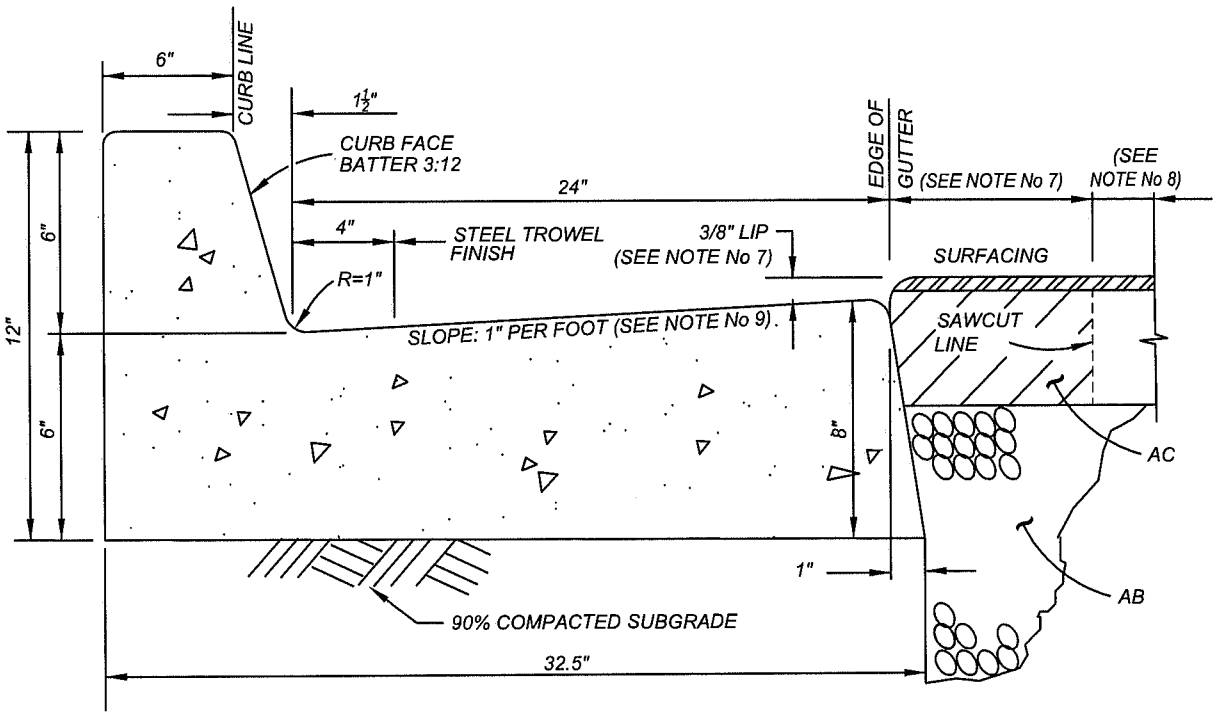

NOTES:

1.) CONCRETE SHALL BE CLASS 560-C-3250 PCC, CURED WITH WHITE PIGMENTED CURING COMPOUND.

2.) ALL EXPOSED CORNERS SHALL BE FINISHED WITH 1/2" RADIUS UNLESS OTHERWISE STATED.

3.) FINISH SHALL BE FINE BROOM.

4.) EXISTING PCC SHALL BE SAWCUT AT WEAKENED PLANE JOINT PRIOR TO REMOVAL.

5.) CURBS SHALL HAVE WEAKENED PLANE JOINTS AT 10' INTERVALS; NO SCORE LINES ALLOWED.

6.) WHEN CURB AND GUTTER IS PLACED BY AN EXTRUSION MACHINE, FINISHING WORK SHALL PROVIDE AN ACCEPTABLE FINISH AND WEAKENED PLANE JOINTS MAY BE SAWCUT.

7.) A MINIMUM 1' WIDE AC PAVEMENT REPAIR PATCH IS REQUIRED WHEN CURB AND GUTTER IS PLACED ADJACENT TO EXISTING AC PAVEMENT. PAVEMENT SURFACE NEAR BOTTOM OF ACCESS RAMP SHALL BE FLUSH WITH EDGE OF GUTTER (NO LIP) AND PAVEMENT SLOPE SHALL NOT EXCEED 5% IN ANY DIRECTION. REFER TO STANDARDS 214A AND 214B FOR REQUIREMENTS.

8.) A MINIMUM 1' WIDE GRIND/COLDMILL 0.10' DEEP SLOT OR AS DIRECTED BY THE CITY ENGINEER. SEE STD 602B FOR FINISH OVERLAY REQUIREMENTS.

9.) GUTTER SLOPE NEAR BOTTOM OF ACCESS RAMP SHALL NOT EXCEED 5% (HIKE = 1.2" MAX) REFER TO STANDARDS 214A AND 214B FOR REQUIREMENTS.

CAPITAL PROJECTS	DATE 1/12	CITY OF MORENO VALLEY PREPARED BY CAPITAL PROJECTS
APPROVED BY DEPUTY PUBLIC WORKS DIRECTOR/ ACTING CITY ENGINEER	DIVISION MANAGER INITIAL	**TYPE 6 INTEGRAL CURB AND GUTTER**
		1 of 1 NO. **200**

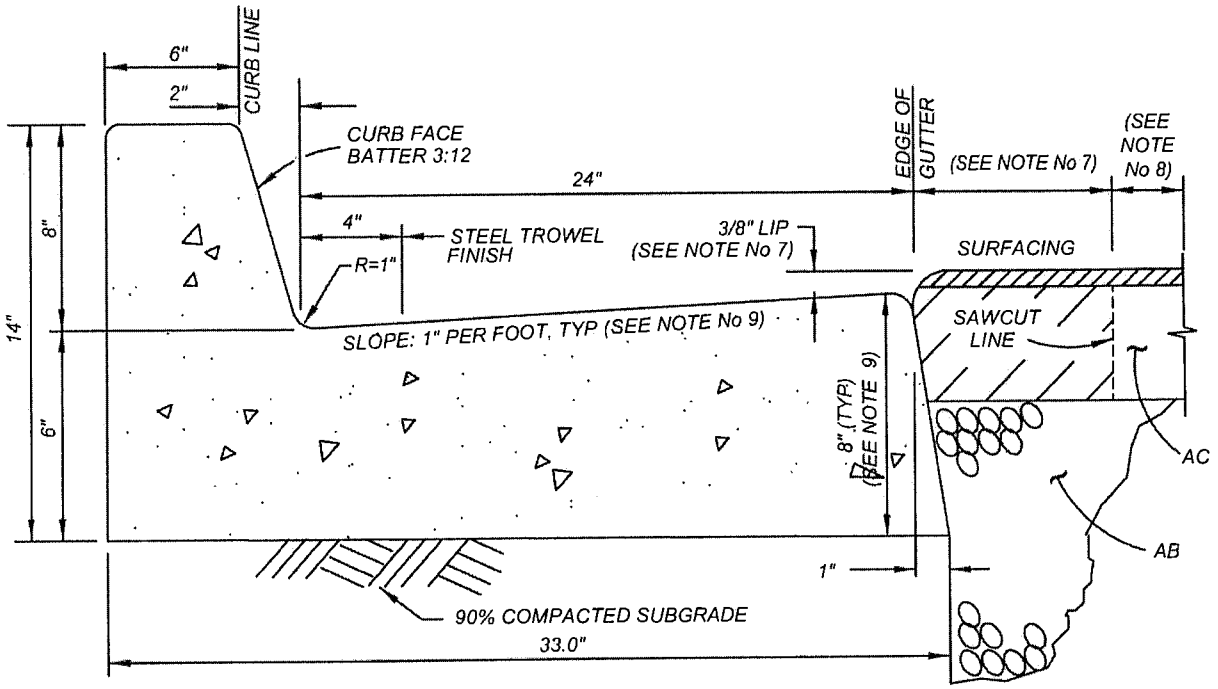

NOTES:

1.) CONCRETE SHALL BE CLASS 560-C-3250 PCC, CURED WITH WHITE PIGMENTED CURING COMPOUND.

2.) ALL EXPOSED CORNERS SHALL BE FINISHED WITH $\frac{1}{2}$" RADIUS UNLESS OTHERWISE STATED.

3.) FINISH SHALL BE FINE BROOM.

4.) EXISTING PCC SHALL BE SAWCUT AT WEAKENED PLANE JOINT PRIOR TO REMOVAL.

5.) CURBS SHALL HAVE WEAKENED PLANE JOINTS AT 10' INTERVALS; NO SCORE LINES ALLOWED.

6.) WHEN CURB AND GUTTER IS PLACED BY AN EXTRUSION MACHINE, FINISHING WORK SHALL PROVIDE AN ACCEPTABLE FINISH AND WEAKENED PLANE JOINTS MAY BE SAWCUT.

7.) A MINIMUM 1' WIDE AC PAVEMENT REPAIR PATCH IS REQUIRED WHEN CURB AND GUTTER IS PLACED ADJACENT TO EXISTING AC PAVEMENT. PAVEMENT SURFACE NEAR BOTTOM OF ACCESS RAMP SHALL BE FLUSH WITH EDGE OF GUTTER (NO LIP) AND PAVEMENT SLOPE SHALL NOT EXCEED 5% IN DIRECTION OF TRAVEL FOR WHEELCHAIRS. REFER TO STANDARDS 214A AND 214B FOR REQUIREMENTS.

8.) A MINIMUM 1' WIDE GRIND/COLDMILL 0.10' DEEP SLOT OR AS DIRECTED BY THE CITY ENGINEER. SEE STD 602B FOR FINISH OVERLAY REQUIREMENTS.

9.) GUTTER SLOPE NEAR BOTTOM OF ACCESS RAMP SHALL NOT EXCEED 5% (HIKE = 1.2" MAX) REFER TO STANDARDS 214A AND 214B FOR REQUIREMENTS.

CAPITAL PROJECTS	DATE 1/13	CITY OF MORENO VALLEY PREPARED BY CAPITAL PROJECTS	
APPROVED BY PUBLIC WORKS DIRECTOR/ CITY ENGINEER	DIVISION MANAGER INITIAL	**TYPE 8 INTEGRAL CURB AND GUTTER**	1 of 1 NO. **201**

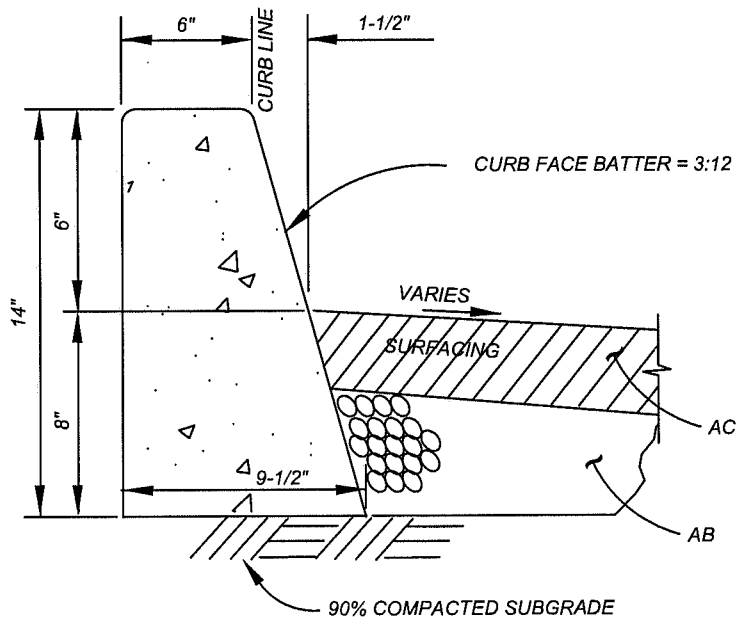

NOTES:

1.) CONCRETE SHALL BE CLASS 560-C-3250 PCC, CURED WITH WHITE PIGMENTED CURING COMPOUND.

2.) ALL EXPOSED CORNERS SHALL BE FINISHED WITH $\frac{1}{2}$" RADIUS.

3.) FINISH SHALL BE FINE BROOM.

4.) EXISTING PCC SHALL BE SAWCUT AT JOINT PRIOR TO REMOVAL.

5.) CURBS SHALL HAVE EXPANSION JOINTS AT BCR AND ECR AND WEAKENED PLANE JOINTS AT 10' INTERVALS ONLY.

6.) WHEN CURB AND GUTTER IS PLACED BY AN EXTRUSION MACHINE, FINISHING WORK SHALL PROVIDE AN ACCEPTABLE FINISH AND WEAKENED PLANE JOINTS MAY BE SAWCUT.

CAPITAL PROJECTS DATE 1/12		CITY OF MORENO VALLEY PREPARED BY CAPITAL PROJECTS
APPROVED BY DEPUTY PUBLIC WORKS DIRECTOR/ ACTING CITY ENGINEER	DIVISION MANAGER INITIAL	**TYPE 6A CURB**
		1 of 1 NO. **202**

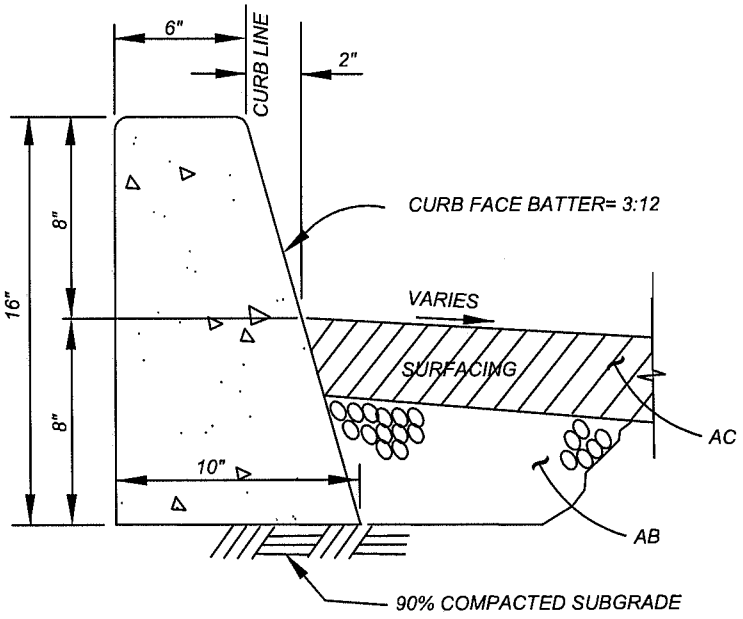

NOTES:

1.) CONCRETE SHALL BE CLASS 560-C-3250 PCC, CURED WITH WHITE PIGMENTED CURING COMPOUND.

2.) ALL EXPOSED CORNERS SHALL BE FINISHED WITH $\frac{1}{2}$" RADIUS.

3.) FINISH SHALL BE FINE BROOM.

4.) EXISTING PCC SHALL BE SAWCUT AT JOINT PRIOR TO REMOVAL.

5.) CURBS SHALL HAVE EXPANSION JOINTS AT BCR AND ECR AND WEAKENED PLANE JOINTS AT 10' INTERVALS ONLY.

6.) WHEN CURB AND GUTTER IS PLACED BY AN EXTRUSION MACHINE, FINISHING WORK SHALL PROVIDE AN ACCEPTABLE FINISH AND WEAKENED PLANE JOINTS MAY BE SAWCUT.

CAPITAL PROJECTS DATE 1/12	CITY OF MORENO VALLEY PREPARED BY CAPITAL PROJECTS	
APPROVED BY DEPUTY PUBLIC WORKS DIRECTOR/ ACTING CITY ENGINEER	DIVISION MANAGER INITIAL	1 of 1
	TYPE 8A CURB	NO. **203**

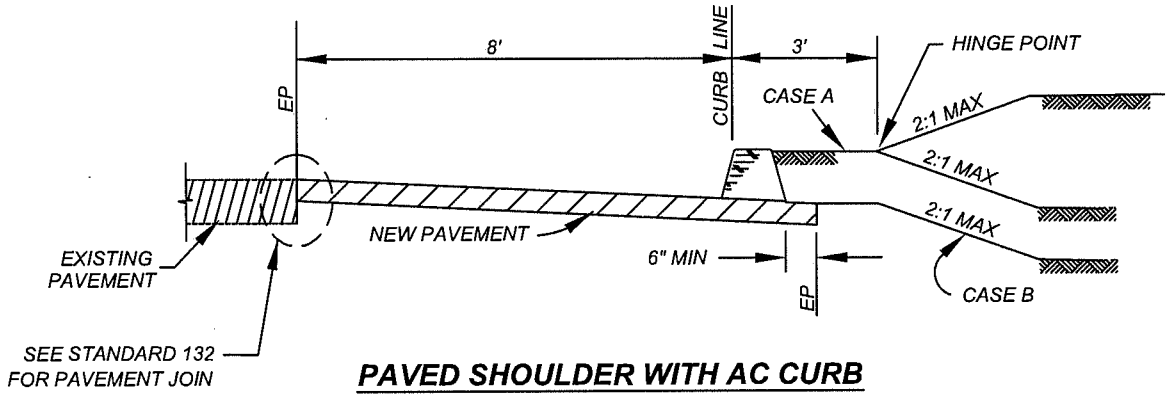

PAVED SHOULDER WITH AC CURB

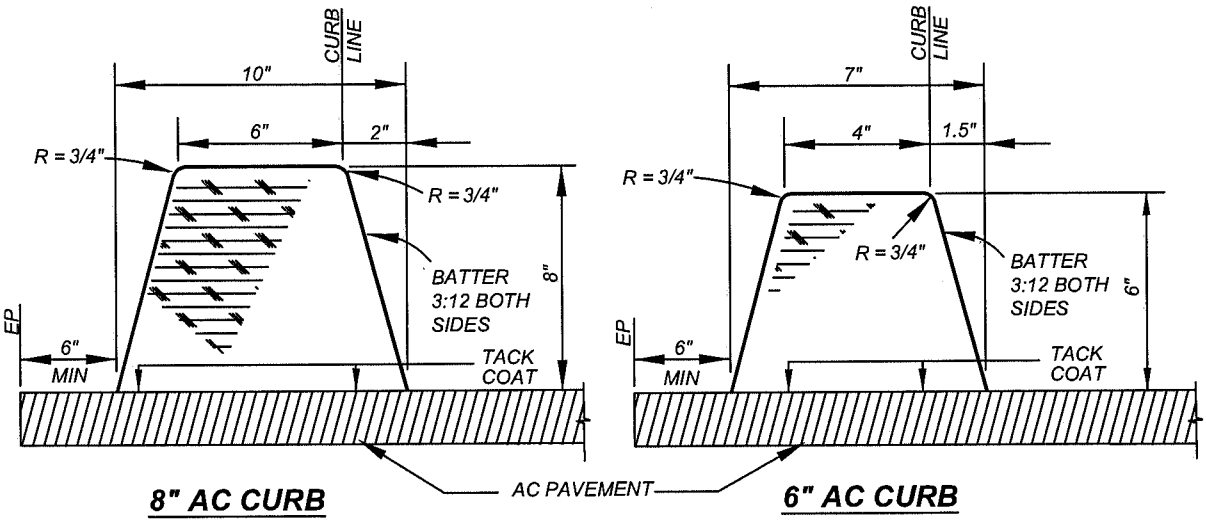

8" AC CURB **6" AC CURB**

NOTES:

1.) THE ASPHALT CONCRETE MIXTURE SHALL BE TYPE III D-PG 70-10 WITH A MINIMUM ASPHALT BINDER OF 5.8 PERCENT.

2.) PRIOR TO PLACEMENT, A TACK COAT SHALL BE APPLIED TO THE EXISTING SURFACE. TACK COAT SHALL BE PG 64-10 AT AN APPROXIMATE RATE OF 0.05 GALLON PER SQUARE YARD OR GRADE SS-1h EMULSIFIED ASPHALT AT AN APPROXIMATE RATE OF 0.05 TO 0.10 GALLON PER SQUARE YARD.

3.) THE TEMPERATURE OF THE MIX AT THE TIME OF PLACEMENT SHALL NOT BE LESS THAN 250°F OR MORE THAN 285° F.

4.) ALL EXTRUDERS AND SHOES SHALL BE APPROVED BY THE CITY ENGINEER.

5.) USE CASE A BACKFILL UNLESS NOTED OTHERWISE.

CAPITAL PROJECTS	DATE 01/11	CITY OF MORENO VALLEY PREPARED BY CAPITAL PROJECTS	
APPROVED BY DIRECTOR OF PUBLIC WORKS / CITY ENGINEER	DIVISION MANAGER INITIAL	**ASPHALT CONCRETE CURB**	1 of 1 NO. **207**

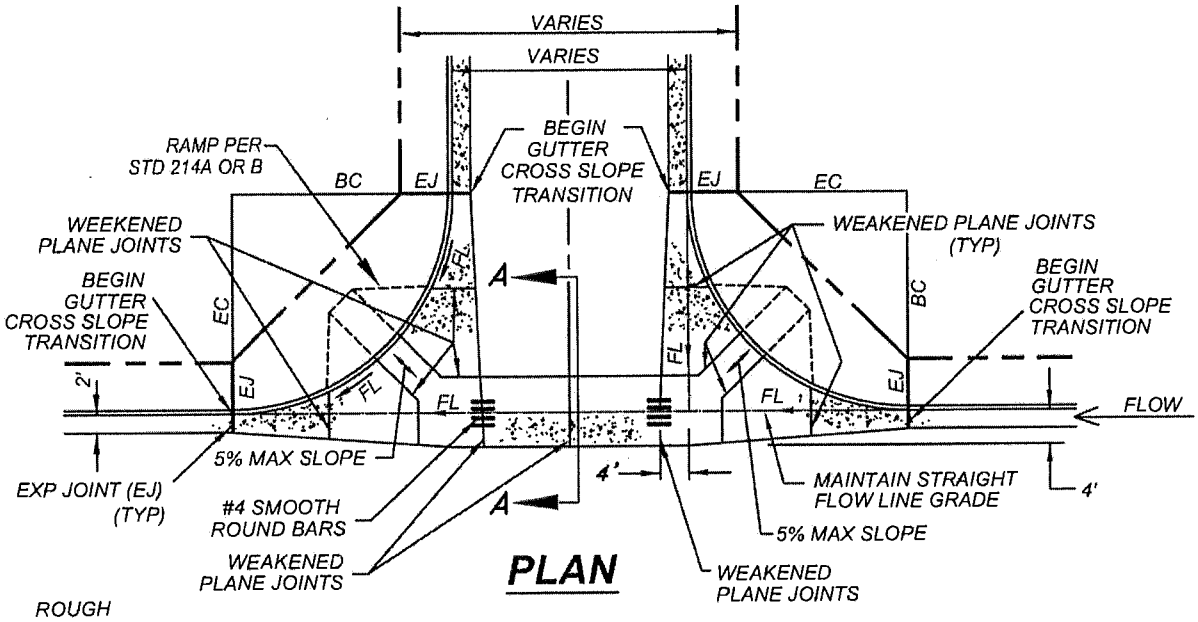

PLAN

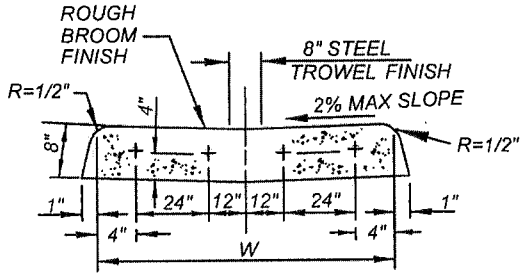

SECTION "A-A"
CROSS GUTTER

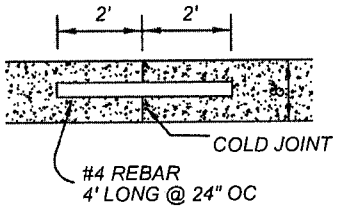

REBAR DETAIL

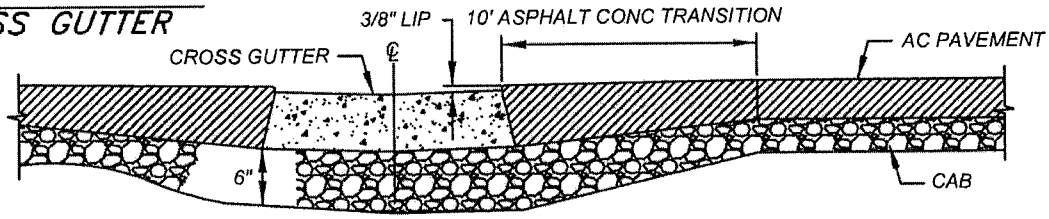

PAVING DETAIL

NOTES:

1.) ALL CONCRETE SHALL BE CLASS 560-C-3250, CURED WITH WHITE PIGMENTED DURING COMPOUND.
2.) COAT 1/2 THE LENGTH OF DOWELS WITH GREASE TO PROVIDE SLIPPAGE.
3.) DIMENSIONS MAY BE INCREASED DEPENDING ON DRAINAGE CONSIDERATIONS.
4.) 6" THICK CLASS (2) AGGREGATE BASE SHALL BE PLACED AND COMPACTED TO 95% RELATIVE COMPACTION UNDER 8" THICK CROSS GUTTER AND SPANDRELS.
5.) DOWELS REQUIRED WHEN CROSS GUTTER AND SPANDREL ARE POURED SEPARATELY.
6.) SPANDREL WEAKENED PLANE JOINT LOCATIONS WILL BE DETERMINED BY ACCESS RAMP LOCATIONS.
7.) A MINIMUM 1' WIDE AC PAVEMENT REPAIR PATCH IS REQUIRED WHEN CROSS GUTTER IS PLACED ADJACENT TO EXISTING AC PAVEMENT.
8.) THE MINIMUM DISTANCE W = 10' ON ARTERIAL STREETS, 8' ON OTHERS.

CAPITAL PROJECTS	DATE 1/13	CITY OF MORENO VALLEY PREPARED BY CAPITAL PROJECTS	
APPROVED BY PUBLIC WORKS DIRECTOR/ CITY ENGINEER	DIVISION MANAGER INITIAL	**CROSS GUTTER AND SPANDREL**	1 of 1 NO. **209**

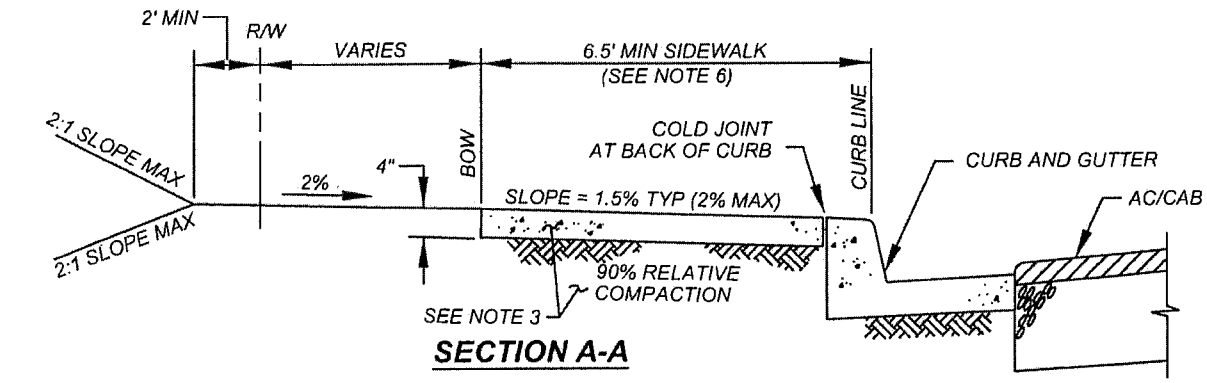

SECTION A-A

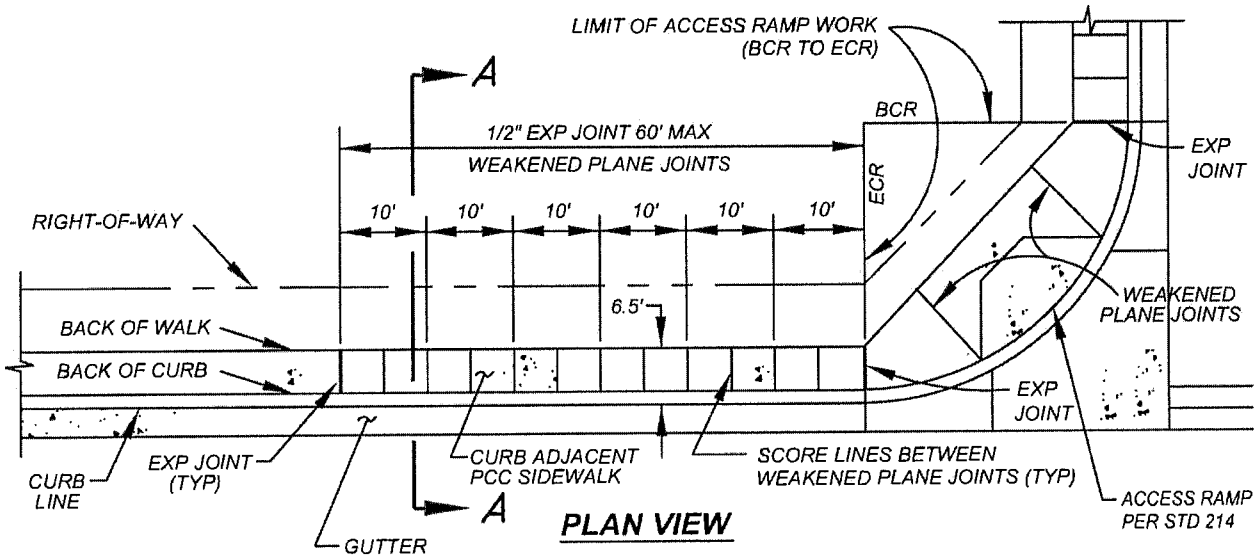

PLAN VIEW

NOTES:

1.) THICKNESS OF SIDEWALK SHALL BE 4" EXCEPT IN DRIVEWAY APRONS, WHERE 6" IS REQUIRED FOR SINGLE FAMILY RESIDENTIAL DRIVEWAYS, AND 8" IS REQUIRED FOR COMMERCIAL DRIVEWAYS.

2.) SIDEWALK SHALL HAVE 1/2" WIDE PREMOLDED EXPANSION JOINTS AND 1- 1/2" DEEP WEAKENED PLANE JOINTS AT INTERVALS SHOWN HEREON. JOINTS SHALL HAVE EDGES WITH 1/4" RADIUS.

3.) CONCRETE SHALL BE CLASS 560-C-3250, CURED WITH WHITE PIGMENTED CURING COMPOUND OVER 90% RELATIVE COMPACTED SUBGRADE. ALTERNATIVELY, IF APPROVED BY THE CITY ENGINEER, PERVIOUS PCC MAY BE USED. PERVIOUS PCC AND SUBGRADE SHALL MEET THE REQUIREMENTS OF SECTIONS 303-8 AND 201-1.1.6 OF THE STANDARD SPECIFICATIONS FOR PUBLIC WORK CONSTRUCTION, LATEST EDITION.

4.) 18" MOISTURE PENETRATION REQUIRED PRIOR TO PLACING CONCRETE IN SIDEWALK AREA (NON-EXPANSIVE SOIL AS DETERMINED BY SOILS TEST ARE EXEMPT AND REQUIRE ONLY SURFACE WETTING).

5.) SIDEWALKS SHALL BE FORMED IN SUCH A MANNER AS TO MAINTAIN 48" MINIMUM OF UNOBSTRUCTED PEDESTRIAN WAY AT ALL LOCATIONS, INCLUDING BUT NOT LIMITED TO STREET LIGHTS, ELECTROLIERS, POWER POLES, AND FIRE HYDRANTS. SEE STANDARD 213.

6.) FOR NEW DEVELOPMENT, CURB ADJACENT SIDEWALK WIDTH SHALL BE 6.5' MINIMUM. SIDEWALK WIDTH OF LESS THAN 6.5' MAY BE USED TO REPLACE SHORT LENGTH OF EXISTING SIDEWALK TO MATCH EXISTING AS APPROVED BY CITY ENGINEER.

7.) WHERE NEW 6.5' WIDE SIDEWALK JOINS EXISTING NARROWER SIDEWALK, A 5:1 TRANSITION IS REQUIRED.

CAPITAL PROJECTS	DATE 1/13	CITY OF MORENO VALLEY PREPARED BY CAPITAL PROJECTS	
APPROVED BY PUBLIC WORKS DIRECTOR/ CITY ENGINEER	DIVISION MANAGER INITIAL	**SIDEWALK**	1 of 1 NO. **210**

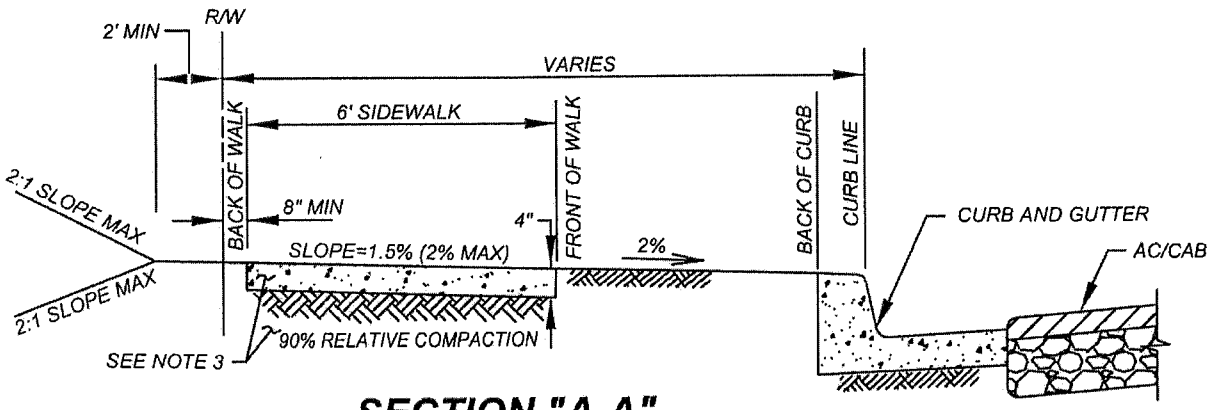

SECTION "A-A"

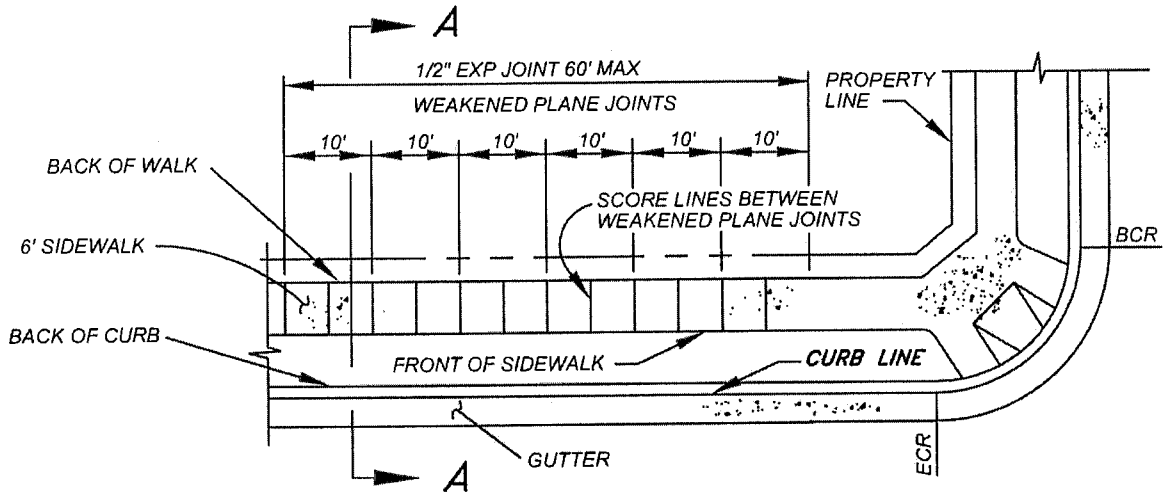

PLAN VIEW

NOTES:

1.) THICKNESS OF SIDEWALK SHALL BE 4" EXCEPT IN DRIVEWAY APRONS WHERE 6" IS REQUIRED FOR RESIDENTIAL DRIVEWAYS AND 8" IS REQUIRED FOR COMMERCIAL DRIVEWAYS.

2.) SIDEWALK SHALL HAVE 1/2" WIDE PREMOLDED EXPANSION JOINTS AND 1- 1/2" DEEP WEAKENED PLANE JOINTS AT INTERVALS SHOWN HEREON. JOINTS SHALL HAVE EDGES WITH 1/4" RADIUS.

3.) CONCRETE SHALL BE CLASS 560-C-3250, CURE WITH WHITE PIGMENTED CURING COMPOUND OVER 90% RELATIVE COMPACTED SUBGRADE. ALTERNATIVELY, IF APPROVED BY THE CITY ENGINEER, PERVIOUS PCC MAY BE USED. PERVIOUS PCC AND SUBGRADE SHALL MEET THE REQUIREMENTS OF SECTIONS 303-8 AND 201-1.1.6 OF THE STANDARD SPECIFICATIONS FOR PUBLIC WORK CONSTRUCTION, LATEST EDITION.

4.) 18" MOISTURE PENETRATION REQUIRED PRIOR TO PLACING CONCRETE IN SIDEWALK AREA (NON-EXPANSIVE SOIL AS DETERMINED BY SOILS TEST ARE EXEMPT AND REQUIRE ONLY SURFACE WETTING.)

5.) PARKWAY FROM CURB TO PROPERTY LINE TO BE BROUGHT TO GRADE BY CONTRACTOR BEFORE FINAL APPROVAL.

6.) SIDEWALKS SHALL BE FORMED IN SUCH A MANNER AS TO MAINTAIN 48" MINIMUM OF UNOBSTRUCTED PEDESTRIAN WAY AT ALL LOCATIONS, INCLUDING BUT NOT LIMITED TO STREET LIGHTS, ELECTROLIERS, POWER POLES, AND FIRE HYDRANTS. SEE STANDARD 213.

7.) WHERE NEW 6.0' WIDE SIDEWALK JOINS EXISTING NARROWER SIDEWALK, A 5:1 TRANSITION IS REQUIRED.

CAPITAL PROJECTS — DATE 1/13		CITY OF MORENO VALLEY PREPARED BY CAPITAL PROJECTS
APPROVED BY PUBLIC WORKS DIRECTOR/ CITY ENGINEER	DIVISION MANAGER INITIAL	**CURB SEPARATED SIDEWALK** — 1 of 1 — NO. **211**

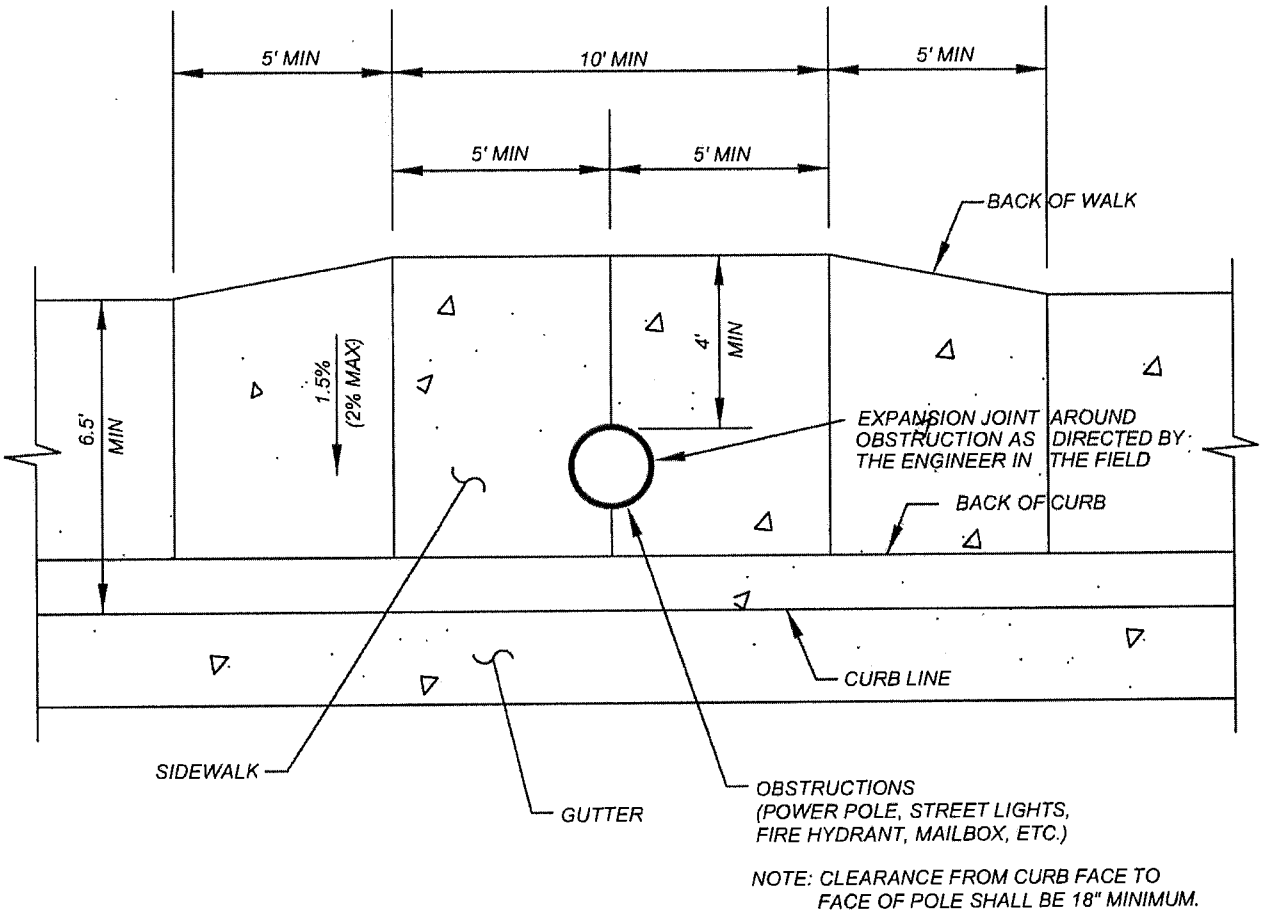

NOTE: CLEARANCE FROM CURB FACE TO FACE OF POLE SHALL BE 18" MINIMUM.

NOTES:

1.) SIDEWALK SHALL WIDEN TO MINIMUM 4' CLEARANCE FOR A MINIMUM LENGTH OF 10', CENTERED AROUND OBSTRUCTION.

2.) MINIMUM TRANSITION LENGTH SHALL BE 5'.

3.) ALL CROSS SLOPES ON SIDEWALK WILL BE 1.5% (2% MAXIMUM).

CAPITAL PROJECTS	DATE 1/13	CITY OF MORENO VALLEY PREPARED BY CAPITAL PROJECTS
APPROVED BY PUBLIC WORKS DIRECTOR/ CITY ENGINEER	DIVISION MANAGER INITIAL	**SIDEWALK PLACEMENT AROUND OBSTRUCTIONS**
		1 of 1 NO. **213**

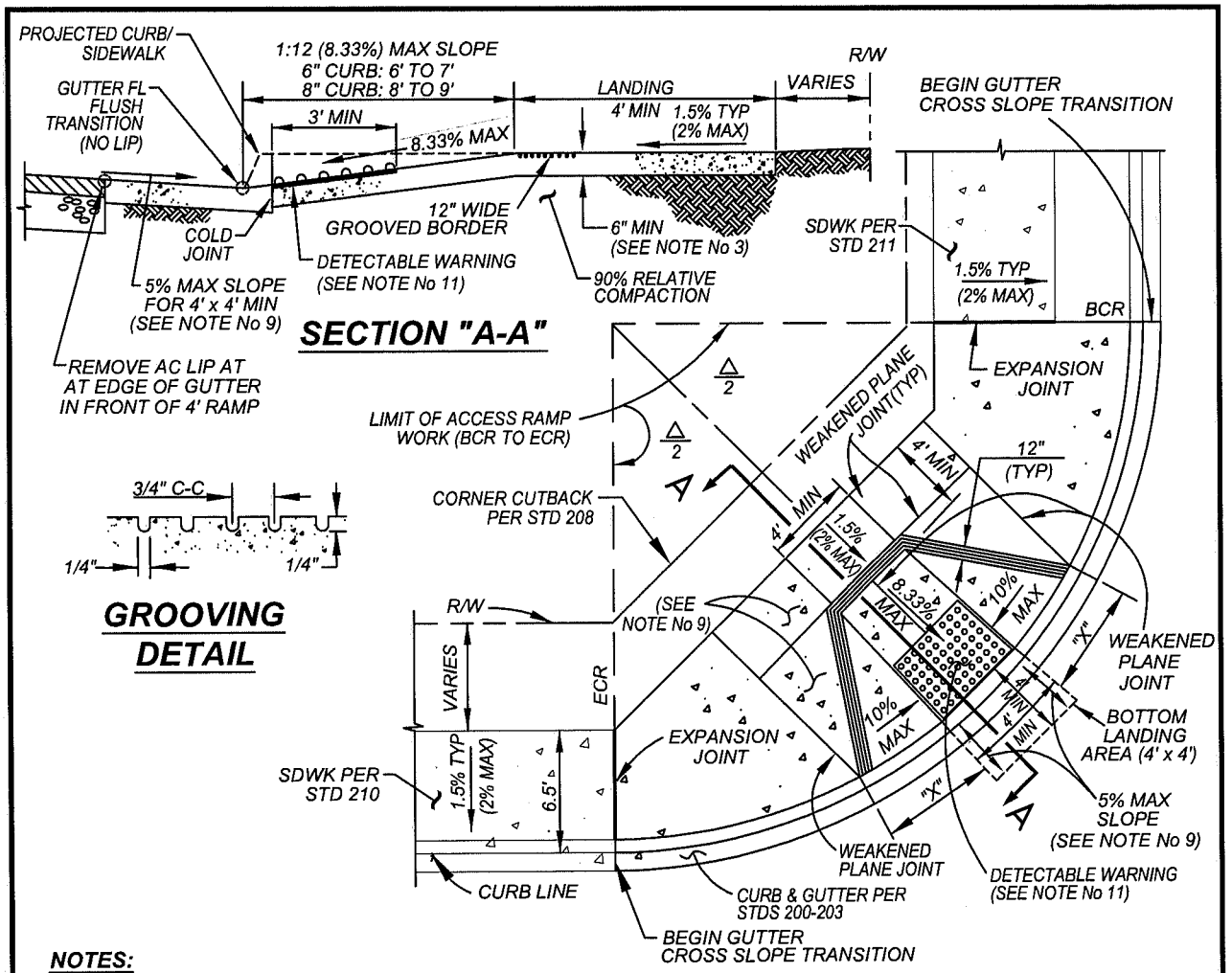

NOTES:

1.) ALL ACCESS RAMPS SHALL BE CONSTRUCTED TO THE MOST CURRENT REQUIREMENTS OF THE AMERICANS WITH DISABILITIES ACT (ADA) STANDARDS/CALIFORNIA CODE OF REGULATIONS TITLE 24-ACCESSIBILITY REGULATIONS. ADJUSTMENTS SHALL BE MADE IN THE FIELD TO ACHIEVE RAMP CONDITIONS.
2.) CONCRETE SHALL BE CLASS 560-C-3250, CURED WITH WHITE PIGMENTED CURING COMPOUND.
3.) THICKNESS OF RAMP AND LANDING AREAS AROUND THE RAMP WITHIN THE CURB RETURN, FROM BCR TO ECR, SHALL BE 6" MINIMUM. RAMP AND LANDING AREAS SHALL BE POURED MONOLITHIC.
4.) A 4' MINIMUM DEPTH LANDING IS REQUIRED AT THE TOP OF THE RAMP OVER THE ENTIRE RAMP WIDTH. CROSS SLOPE OF LANDING MAY NOT EXCEED 1:50 (2.0%) IN ANY DIRECTION.
5.) RAMP SIDES ALONG "X" SHALL HAVE A MAXIMUM SLOPE OF 1:10 (10%).
6.) GROOVED BORDER SHALL BE 12" WIDE ALONG THE TOP AND SIDES OF THE RAMP AT THE LEVEL SURFACE OF THE SIDEWALK. OMIT GROOVES ADJACENT TO NON-PAVED AREAS.
7.) RAMP SURFACE AND FLARED SIDES SHALL BE SLIP-RESISTANT (ROUGH BROOM FINISH OR EQUIVALENT) AND SHALL BE OF CONTRAST FINISH FROM ADJACENT SIDEWALK.
8.) SEE STANDARD PLAN 411 FOR CROSSWALK LOCATION DETAIL. SEE STANDARD PLAN 208 FOR R/W CORNER CUT-BACK.
9.) SLOPES JOINING BOTTOM OF THE RAMP (I.E. ROAD GUTTERS) SHALL NOT EXCEED 1:20 (5%). THE SLOPES JOINING TOP OF RAMP SHALL NOT EXCEED 1:50 (2%).
10.) DIMENSIONS SHOWN FOR SLOPING PORTIONS OF RAMP VARY DUE TO FIELD CONDITIONS.
11.) DETECTABLE WARNING SURFACES ARE REQUIRED ON ALL CURB RAMPS THAT ENTER INTO A VEHICULAR TRAVELED WAY. SEE STANDARD PLAN 214C FOR DETECTABLE WARNING SURFACE DETAILS AND NOTES.
12.) FOR NEW ACCESS RAMPS ON EXISTING STREETS, A 12" WIDTH OF PAVEMENT SHALL BE REMOVED AND REPLACED TO FULL DEPTH FOR CONSTRUCTION OF CURB AND GUTTER.

CAPITAL PROJECTS	DATE 1/12	CITY OF MORENO VALLEY PREPARED BY CAPITAL PROJECTS	
APPROVED BY DEPUTY PUBLIC WORKS DIRECTOR/ ACTING CITY ENGINEER	DIVISION MANAGER INITIAL	**ACCESS RAMP: TYPE I**	1 of 3 NO. **214A**

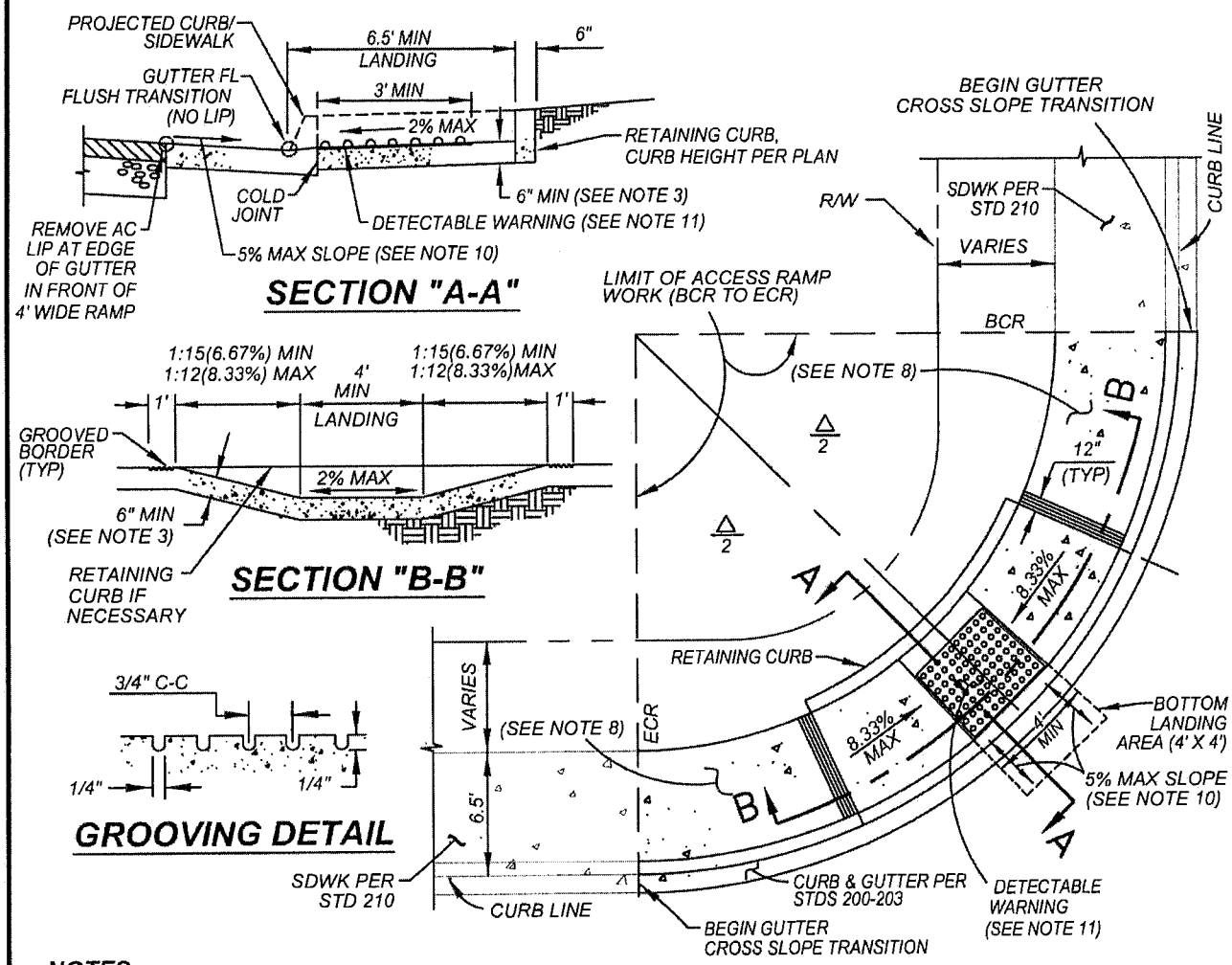

NOTES:

1.) TYPE II RAMP MAY BE USED WHEN MINIMUM DISTANCE OF 4' AT TOP OF TYPE I RAMP CANNOT BE ACHIEVED.
2.) ALL ACCESS RAMPS SHALL BE CONSTRUCTED TO THE MOST CURRENT REQUIREMENTS OF THE AMERICANS WITH DISABILITIES ACT (ADA) STANDARDS/CALIFORNIA CODE OF REGULATIONS TITLE 24-ACCESSIBILITY REGULATIONS. ADJUSTMENTS SHALL BE MADE IN THE FIELD TO ACHIEVE RAMP CONDITIONS.
3.) THICKNESS OF RAMP AND LANDING AREAS ON BOTH SIDES OF THE RAMP WITHIN CURB RETURN, FROM BCR TO ECR, SHALL BE 6" MINIMUM. RAMP AND LANDING AREAS SHALL BE POURED MONOLITHIC.
4.) CONCRETE SHALL BE CLASS 560-C-3250, CURED WITH WHITE PIGMENTED CURING COMPOUND.
5.) CROSS SLOPE OF LANDING MAY NOT EXCEED 1:50 (2.0%) IN ANY DIRECTION.
6.) RAMP SIDES SHALL HAVE A MAXIMUM SLOPE OF 1:12 (8.33%) AND A MINIMUM SLOPE OF 1:15 (6.67%).
7.) GROOVED BORDER SHALL BE 12" WIDE ALONG THE TOP OF THE RAMP AT THE LEVEL SURFACE OF THE SIDEWALK. OMIT GROOVES ADJACENT TO NON-PAVED AREAS.
8.) RAMP SURFACE AND SIDES SHALL BE SLIP-RESISTANT (ROUGH BROOM FINISH OR EQUIVALENT) AND SHALL BE OF CONTRASTING FINISH FROM ADJACENT SIDEWALK.
9.) SEE STANDARD PLAN 411 FOR CROSSWALK LOCATION DETAIL.
10.) SLOPES JOINING BOTTOM OF THE RAMP (I.E. ROAD GUTTERS) SHALL NOT EXCEED 1:20 (5%). THE SLOPES JOINING TOP OF RAMP SHALL NOT EXCEED 1:50 (2%) IN ANY DIRECTION.
11.) DETECTABLE WARNING SURFACES ARE REQUIRED ON ALL CURB RAMPS THAT ENTER INTO A VEHICULAR TRAVELED WAY. SEE STANDARD PLAN 214C FOR DETECTABLE WARNING SURFACE DETAILS AND NOTES.

CAPITAL PROJECTS	DATE 1/13	CITY OF MORENO VALLEY
APPROVED BY	DIVISION MANAGER INITIAL	PREPARED BY CAPITAL PROJECTS
PUBLIC WORKS DIRECTOR/ CITY ENGINEER		ACCESS RAMP: TYPE II
		2 of 3
		NO. 214B

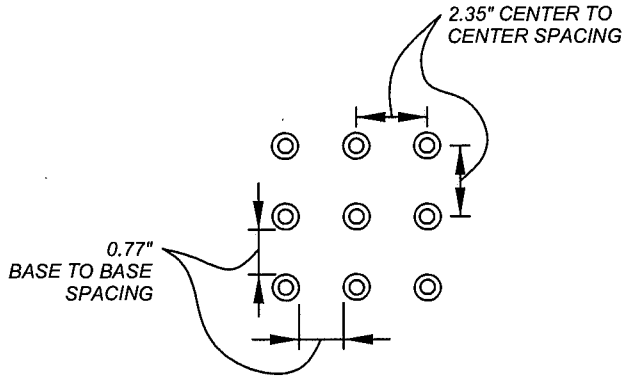

RAISED TRUNCATED DOME PATTERN (IN-LINE)

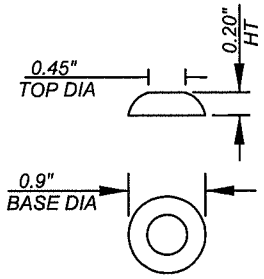

RAISED TRUNCATED DOME

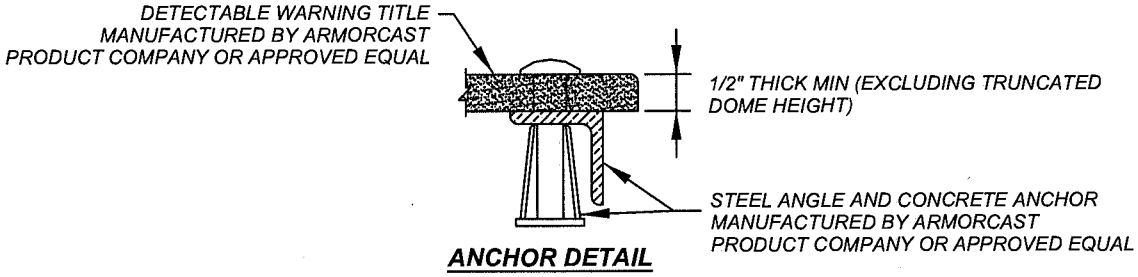

ANCHOR DETAIL

NOTES:

1.) DETECTABLE WARNING, MOUNTED FLUSH, SURFACE SHALL BE CAST-IN-PLACE DETECTABLE WARNING TILE WITH STEEL ANGLES AND ANCHORS, MANUFACTURED BY ARMORCAST PRODUCTS COMPANY OR APPROVED EQUAL, AND SHALL MEET ALL ADA REQUIREMENTS AS WELL AS STATE TITLE 24 REQUIREMENTS.

2.) COLOR SHALL BE YELLOW CONFORMING TO FEDERAL STANDARD 595B, COLOR NO. 33538.

3.) DETECTABLE WARNING SURFACE SHALL CONFORM TO THE DETAILS ON THIS STANDARD PLAN.

4.) DETECTABLE WARNING SURFACE SHALL BE FULL WIDTH OF RAMP AND 3 FOOT MINIMUM IN DEPTH OF RAMP AND UTILIZE A SINGLE PIECE.

5.) DETECTABLE WARNING SURFACE SHALL BE INSTALLED SO THAT DOMES ARE ALIGNED PARALLEL TO CENTERLINE OF ACCESS RAMP.

6.) THE EDGE OF THE DETECTABLE WARNING SURFACE NEAREST THE STREET SHALL BE BETWEEN 6" AND 8" FROM THE GUTTER FLOW LINE.

7.) RETROFIT INSTALLATION SHALL BE DETECTABLE WARNING TILE (PER NOTE 1) TIED DOWN TO EXISTING RAMP SURFACE WITH ANCHORS AND SEALED WITH WATERPROOFING ADHESIVE. NO SELF-ADHESIVE SURFACE APPLIED DOME MATS ALLOWED. TILE SHALL BE INSTALLED FLUSH WITH THE RAMP SURFACE. PERIMETER "LIP" SHALL NOT EXCEED 1/4".

CAPITAL PROJECTS	DATE 1/12	CITY OF MORENO VALLEY PREPARED BY CAPITAL PROJECTS
APPROVED BY DEPUTY PUBLIC WORKS DIRECTOR/ ACTING CITY ENGINEER	DIVISION MANAGER INITIAL	**DETECTABLE WARNING SURFACE DETAILS AND NOTES**
		3 of 3 NO. **214C**

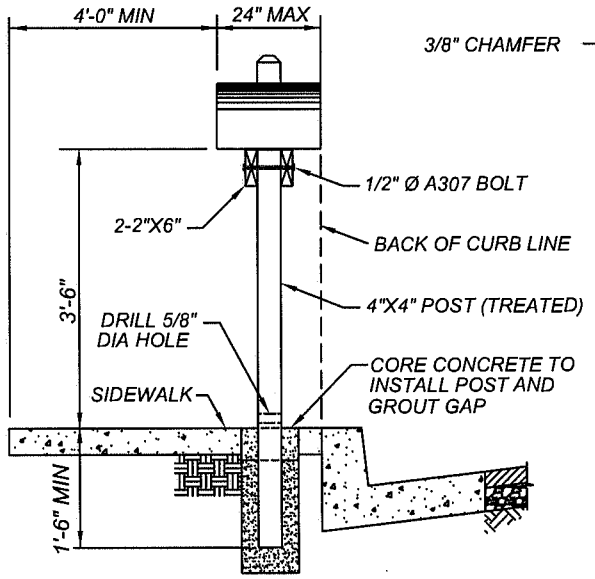

SIDE VIEW

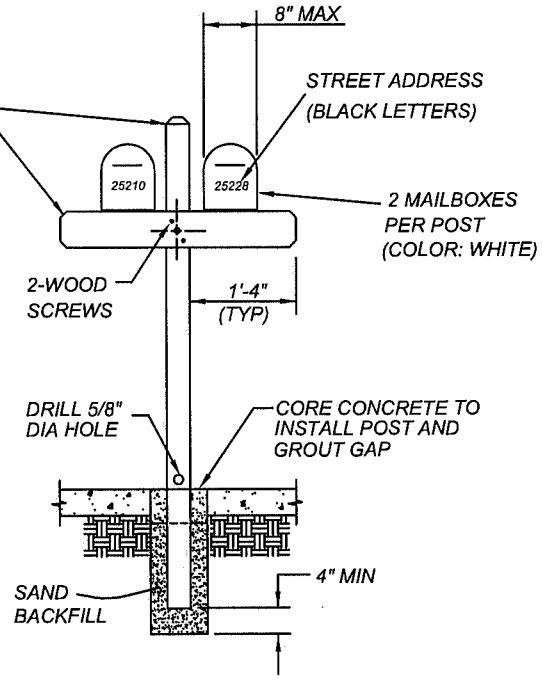

FRONT VIEW

NOTES:

1.) TOP AND END OPENING MAILBOXES PERMITTED PROVIDED THAT THE FACE OF MAILBOX DOES NOT EXTEND INTO BACK OF CURB LINE. OPENING MUST FACE STREET.

CAPITAL PROJECTS	DATE 01/11	CITY OF MORENO VALLEY PREPARED BY CAPITAL PROJECTS
APPROVED BY PUBLIC WORKS DIRECTOR/ CITY ENGINEER	DIVISION MANAGER INITIAL	**SINGLE POST MAILBOX INSTALLATION**
		1 of 1 NO. **222**

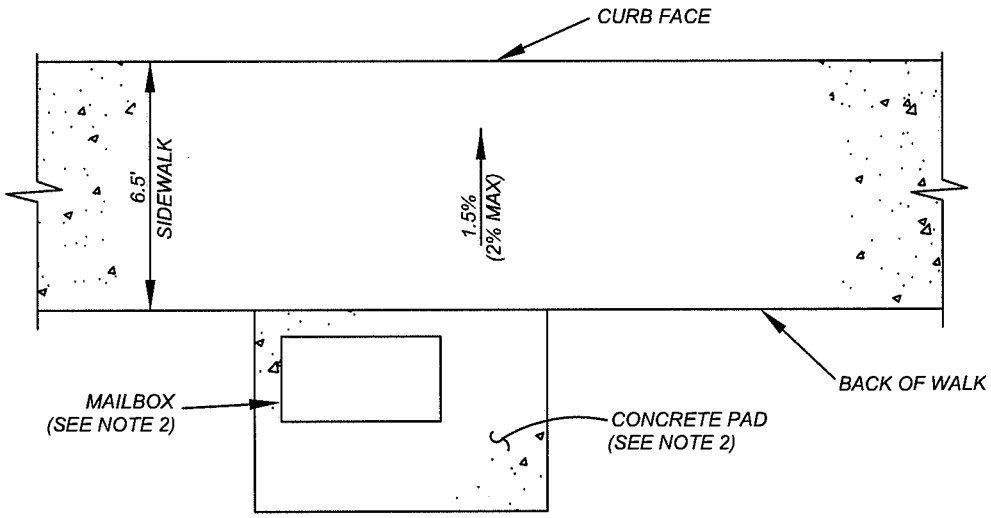

CASE "A"

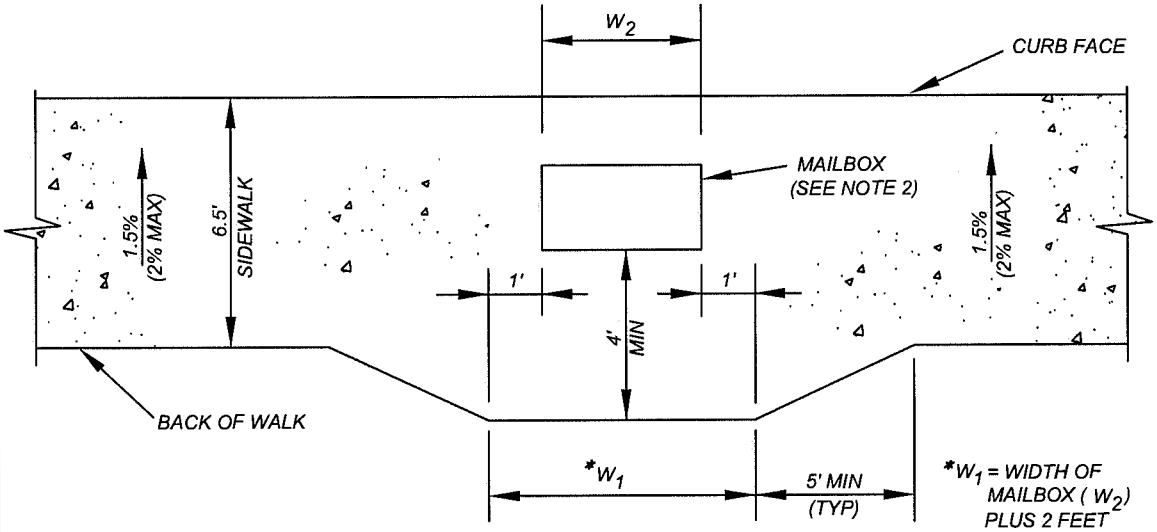

CASE "B"

NOTES:

1.) CASE "A" SHALL BE THE PREFERRED LOCATION FOR MAILBOX. WHEN FIELD CONDITIONS INDICATE, CASE "B" MAY BE USED.

2.) MAILBOX LOCATION, FOUNDATION, PAD, ANCHOR BOLTS AND BOLT HOLES SHALL CONFORM TO SPECIFICATIONS FURNISHED BY THE POSTMASTER.

3.) NO MAILBOXES SHALL BE LOCATED ON ARTERIAL ROADWAYS.

CAPITAL PROJECTS	DATE 01/11	CITY OF MORENO VALLEY
APPROVED BY	DIVISION MANAGER INITIAL	PREPARED BY CAPITAL PROJECTS
PUBLIC WORKS DIRECTOR/ CITY ENGINEER		**MULTIPLE MAILBOX INSTALLATION FOR NEW SIDEWALK**
		1 of 1
		NO. **223**

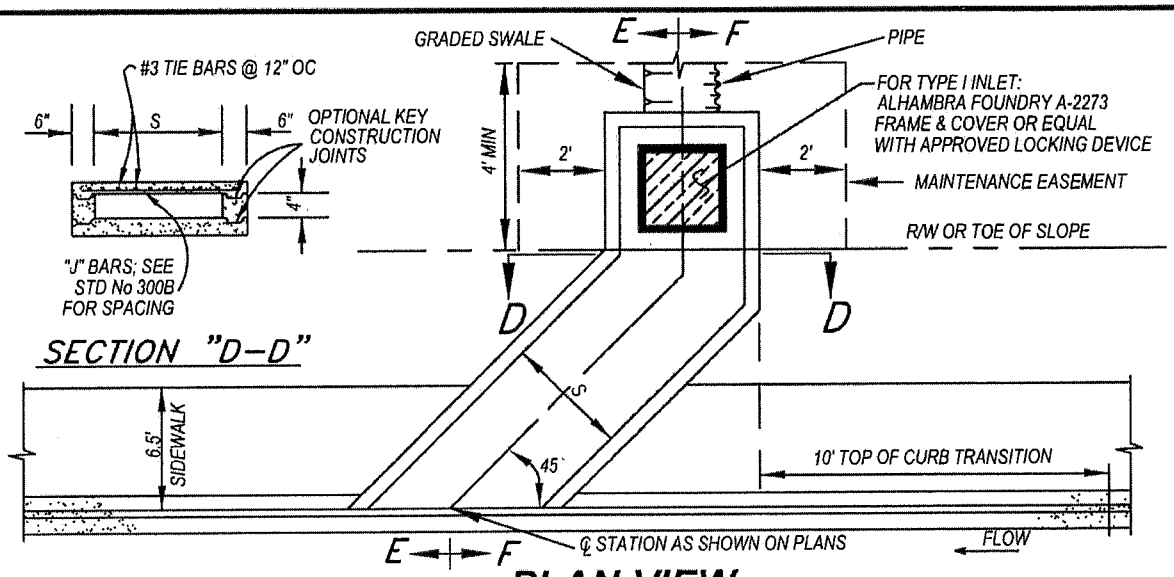

PLAN VIEW

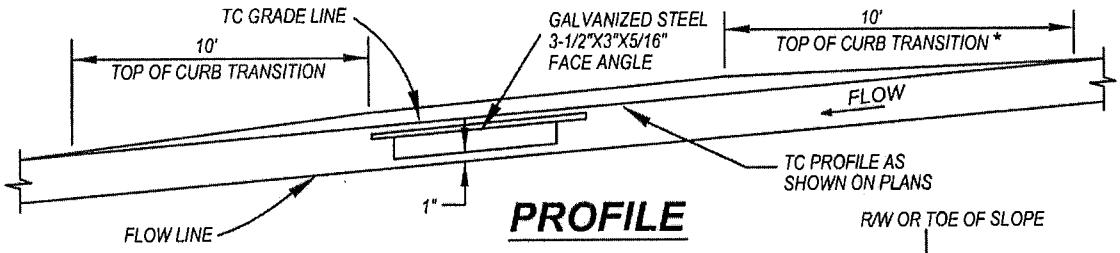

PROFILE

NOTES:

1) SPAN "S" AND HEIGHT OF OPENING AND CURB FACE HEIGHT AT CULVERT SHALL BE NOTED ON PLANS.
2) SEE STANDARD PLAN No 300B FOR DETAILS AND NOTES.
3) CONCRETE SHALL BE CLASS 560-C-3250.
4) FACE ANGLE SHALL BE ANCHORED BY FULL PENETRATION WITH A 3-5/8" x 6-3/8" STEEL STUD OR BUTT WELD.
5) UNLESS OTHERWISE SPECIFIED, STANDARD FRAME AND COVER SHALL BE ALHAMBRA FOUNDRY GALVANIZED PIPE OR APPROVED EQUAL.
6) 1 INCH STEEL CLEARANCE MINIMUM FROM FACE OF CONCRETE.
7) TOP OF INLET STRUCTURE TO MATCH ADJACENT SLOPE.
8) SIDEWALK LONGITUDINAL SLOPE SHALL NOT EXCEED 5% AND CROSS SLOPE SHALL NOT EXCEED 2% PER ADA REQUIREMENTS.

* TOP OF CURB TRANSITION IS REQUIRED FOR 6" CURBS OR 8" CURBS WITH S > 4.0'.

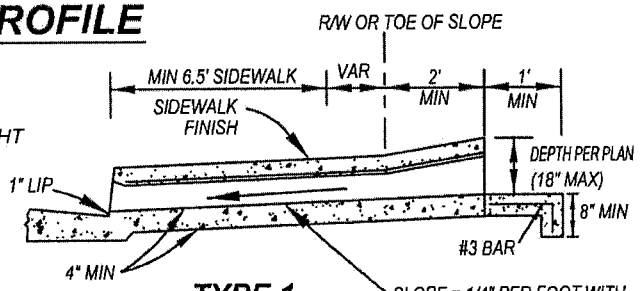

TYPE 1 SECTION "E-E"

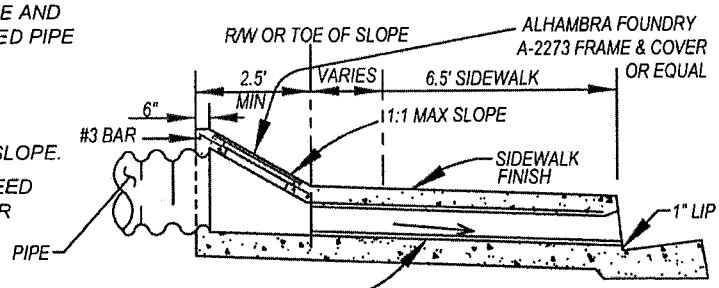

TYPE 2 SECTION "F-F"

CAPITAL PROJECTS	DATE 1/13	CITY OF MORENO VALLEY
APPROVED BY	DIVISION MANAGER INITIAL	PREPARED BY CAPITAL PROJECTS
PUBLIC WORKS DIRECTOR/ CITY ENGINEER		1 of 2
		PARKWAY CULVERT — NO. **300A**

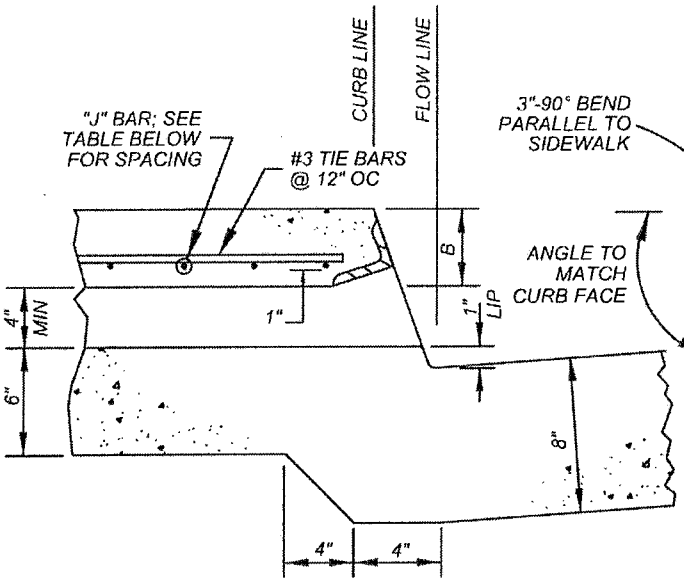

OUTLET DETAIL

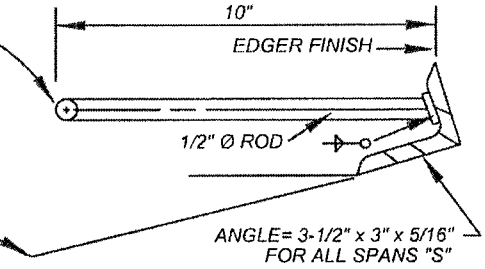

LENGTH OF CURB OPENING	NO. OF ANCHORS
3' OR LESS	2
3'-0" TO 6'-0"	3

FACE ANGLE ANCHOR DETAIL

SPAN "S"	B	STEEL SCHEDULE J-BARS		
		SIZE	SPACING C-C	LENGTH
2'-0"	3"	#3	7"	2'-9"
2'-6"	3"	#3	7"	3'-3"
3'-0"	3"	#3	7"	3'-9"
3'-6"	3"	#3	6"	4'-3"
4'-0"	3"	#3	5"	4'-9"
4'-6"	4"	#3	6-1/2"	5'-3"
5'-0"	4"	#3	5"	5'-9"
5'-6"	4"	#3	4"	6'-3"
6'-0"	4"	#3	3-1/2"	6'-9"

STEEL SCHEDULE TABLE

NOTES:

1.) FLOOR OF PARKWAY CULVERT SHALL HAVE A SMOOTH TROWELED FINISH.

2.) ALL EXPOSED METAL SHALL BE GALVANIZED AFTER FABRICATION.

3.) HEIGHT OF CURB OPENING FOR PARKWAY CULVERT WILL VARY WITH TYPE OF CURB.

4.) SPAN "S" AND HEIGHT OF CURB OPENING WILL BE DETERMINED FROM THE REQUIRED HYDRAULIC CAPACITY AND LIMITED TO THE DIMENSION IN STEEL SCHEDULE TABLE.

5.) REINFORCING STEEL SHALL BE 1" CLEAR TO INSIDE OF CULVERT UNLESS OTHERWISE SPECIFIED.

6.) CONSTRUCT PCC WALK AS SPECIFIED ON PLAN. THE CONTRACT PRICE PAID FOR PCC SIDEWALK ITEM SHALL INCLUDE WALK CONSTRUCTED IN CONJUNCTION WITH PARKWAY CULVERT.

7.) TYPE, DIMENSIONS, AND ELEVATIONS PER IMPROVEMENT PLAN.

CAPITAL PROJECTS	DATE 1/13	CITY OF MORENO VALLEY
APPROVED BY	DIVISION MANAGER INITIAL	PREPARED BY CAPITAL PROJECTS
PUBLIC WORKS DIRECTOR/ CITY ENGINEER		**PARKWAY CULVERT DETAILS AND NOTES**
		2 of 2 NO. **300B**

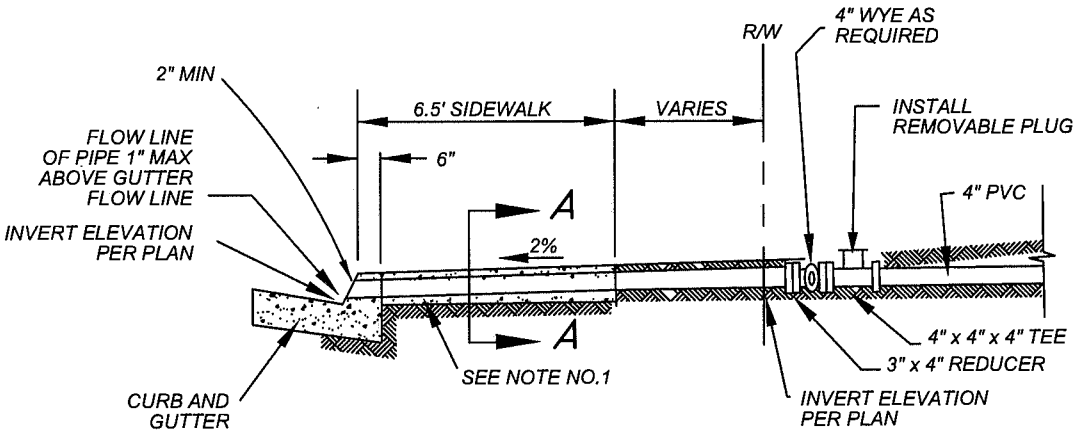

ELEVATION

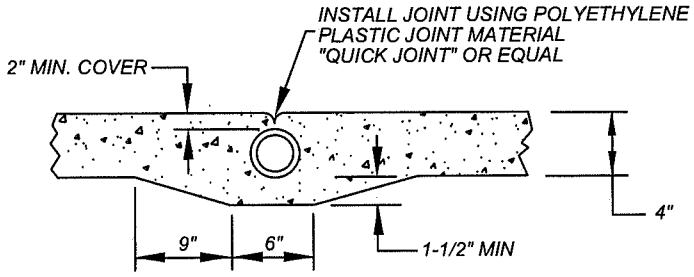

SECTION "A-A"
SIDEWALK

NOTES:

1) DRAINS SHALL BE 3 INCH DIA. PVC PIPE (SCHEDULE 40) OR RECTANGULAR CAST IRON BOX FOR 6 INCH CURB FACE AND 4 INCH DIA. PVC PIPE (SCHEDULE 40) OR RECTANGULAR CAST IRON BOX FOR 8 INCH CURB FACE.

2) THE CURB SHALL BE CORED FOR ALL DRAIN PIPES.

3) THE NUMBER OF PIPES AT ANY LOCATION SHALL NOT EXCEED 4 @ 12" OC.

4) REQUIRED FOR ALL SINGLE FAMILY RESIDENTIAL LOTS.

CAPITAL PROJECTS	DATE 01/11	CITY OF MORENO VALLEY PREPARED BY CAPITAL PROJECTS	
APPROVED BY PUBLIC WORKS DIRECTOR/ CITY ENGINEER	DIVISION MANAGER INITIAL	**CURB DRAIN: RESIDENTIAL**	1 of 1 NO. **303**

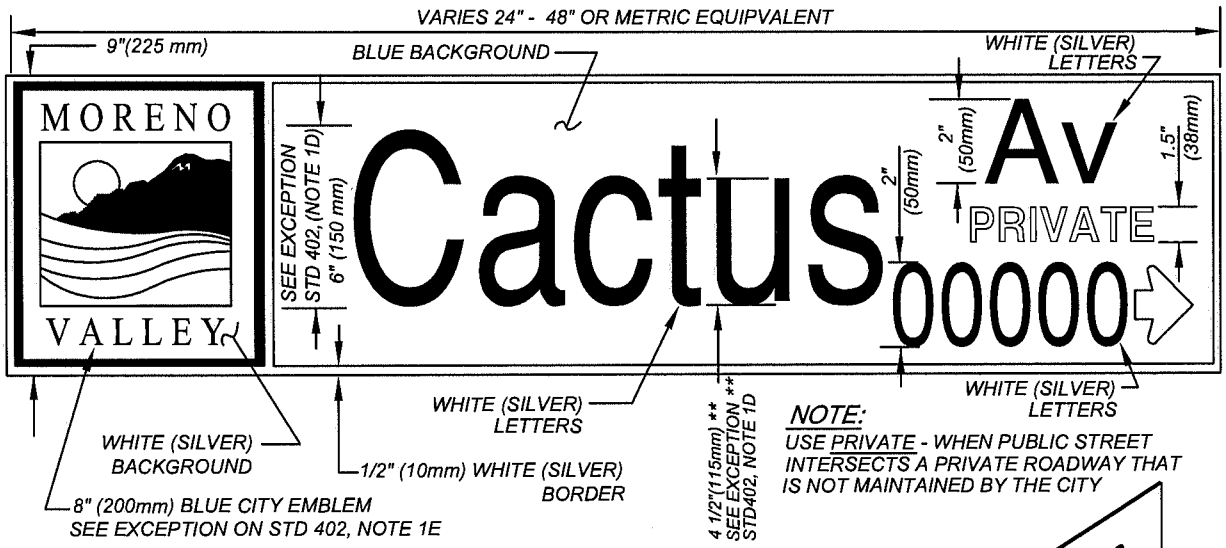

NOTE:
USE PRIVATE - WHEN PUBLIC STREET INTERSECTS A PRIVATE ROADWAY THAT IS NOT MAINTAINED BY THE CITY

STANDARD STREET NAME SIGN

MODIFIED STREET NAME SIGN

NOTE: FOR INTERSECTING SECONDARY STREETS (LOCAL RESIDENTIAL), USE 5" UPPERCASE AND EQUIVALENT LOWER CASE AND NO CITY EMBLEM. ALL OTHER DIMENSIONS AND INSTALLATION SAME AS STANDARD STREET NAME SIGN. BLOCK NUMBERS ARE NOT SHOWN ON INTERSECTING SECONDARY STREETS

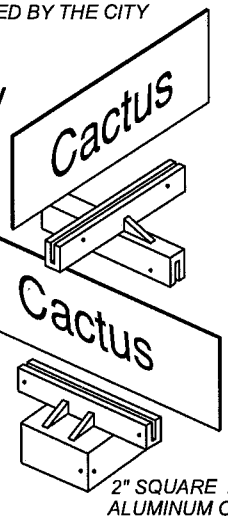

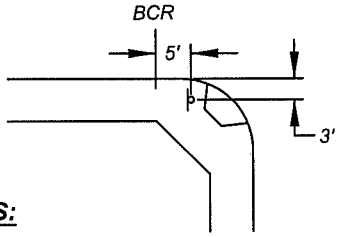

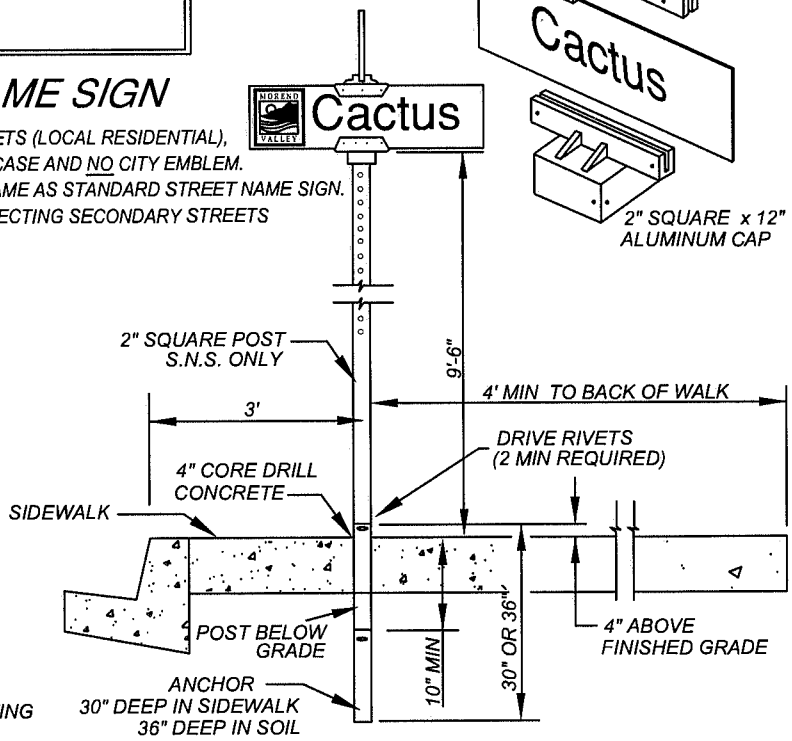

NOTES:

1.) EACH SIGN POST SHALL ACCOMPANY TWO STREET NAME SIGN BLADES SEE STANDARD 402 FOR COMPLETE STREET NAME SIGN SPECIFICATIONS SEE STANDARD NO. 404 FOR COMPLETE ADDRESS AND ARROW PLACEMENT SEE STANDARDS 407-408 FOR COMPLETE SIGN POST INSTALLATION BLOCK NUMBERS NOT DISPLAYED ON INTERSECTING SECONDARY STREETS.

TRANSPORTATION	DATE 1/12	CITY OF MORENO VALLEY PREPARED BY CAPITAL PROJECTS
APPROVED BY DEPUTY PUBLIC WORKS DIRECTOR/ ACTING CITY ENGINEER	DIVISION MANAGER INITIAL EL	STREET NAME SIGN 1 of 1 NO. 401

NOTES:

1.) SIGN MATERIALS, SIZES AND FABRICATION

A.) SIGN BLANK MUST BE 0.125 THICK ALUMINUM, 5052-H38 ALUMINUM ALLOY.

B.) SIGN BLANK DIMENSIONS ARE 9" HIGH BY A MINIMUM OF 24" TO MAXIMUM OF 48" LONG AS REQUIRED (USE METRIC EQUIVALENT).

C.) SIGN SHEETING MUST BE HIGH PERFORMANCE WIDE ANGLE PRISMATIC LENS REFLECTIVE WHITE (SILVER) SHEETING (3M SCOTCHLITE DIAMOND GRADE VIP 3990) OR APPROVED EQUIVALENT. THE BACKGROUND MUST BE SCREEN PRINTED BLUE USING REFLECTIVE SHEETING MANUFACTURER MATCH COMPONENT INK (3M 883I) OR APPROVED EQUIVALENT.

D.) SIGN STREET NAME LETTERS MUST BE WHITE (SILVER) FHWA (FEDERAL HIGHWAY ADMINISTRATION) SERIES C-6" (150 mm) UPPER CASE AND 4 ½" (115 mm) LOWER CASE. ADDRESS BLOCK NUMBERS MUST BE WHITE (SILVER) FHWA SERIES C-2" (50mm). STREET NAME SUFFIX MUST BE WHITE (SILVER) FHWA 2" (50mm) UPPER CASE AND 1.5" (40mm) LOWER CASE.
EXCEPTION: INTERSECTING SECONDARY STREETS USE 5" UPPER CASE AND EQUIVALENT LOWER CASE STREET NAME LETTERS.

E.) THE LETTER SIZING AND SPACING MUST MEET FHWA SPACING GUIDELINES. MINOR VARIATIONS AS APPROVED BY THE CITY ENGINEER.

F.) THE CITY EMBLEM MUST BE A BLUE GRAPHIC ON A WHITE (SILVER) BACKGROUND.
EXCEPTION: NO CITY EMBLEM REQUIRED FOR INTERSECTING SECONDARY STREETS.

G.) STREET NAME MUST APPEAR ON EACH SIDE OF THE SIGN BLANK.

H.) STREET NAME SIGN MAY BE FABRICATED USING REFLECTIVE SHEETING MANUFACTURED MATCHED COMPONENT ELECTRONIC CUTTABLE FILMS (3M E.C. 1175) OR APPROVED EQUAL.

I.) SLIGHT LAYOUT VARIATIONS ARE PERMITTED AND MUST BE APPROVED BY THE CITY ENGINEER.

2.) POST MATERIALS

A.) POST MUST BE A TELESPAR 2" SQUARE POST (HOT DIPPED GALVANIZED INSIDE AND OUTSIDE) OR APPROVED EQUIVALENT. ALL SIGN POSTS SHALL BE 12 GAUGE STEEL.

B.) ANCHORS MUST BE TELESPAR 30" OR 36" 2 ¼" SQUARE ANCHORS AND 2 ½" SLEEVES OR APPROVED EQUIVALENT. ALL ANCHORS AND SLEEVES SHALL BE 12 GAUGE STEEL.

C.) DRIVE RIVETS MUST BE ⅜" OR APPROVED EQUIVALENT (2 RIVETS MINIMUM REQUIRED PER POST / ANCHOR ASSEMBLY).

D.) ALUMINUM CAP POST BRACKET MUST BE 2" SQUARE CAP WITH 12" SADDLE TO FIT 0.125 SIGN BLANK PER DETAIL 401.

E.) ALUMINUM CROSS SADDLE BRACKET MUST BE 12" SIGN HARDWARE HOLDING BRACKETS OR APPROVED EQUIVALENT. MUST BE MANUFACTURED TO FIT 0.125 SIGN BLADE.

3.) STREET NAME SIGN PLACEMENT

A.) PRIMARY STREET INTERSECTING SECONDARY STREET LOCATE ON PRIMARY STREET - SEE STANDARD 404.

B.) PRIMARY STREET INTERSECTING PRIMARY STREET LOCATE ON NORTHEAST CORNER AND SOUTHWEST CORNER.

C.) SECONDARY STREET INTERSECTING SECONDARY STREET LOCATE ON NORTHEAST CORNER OR AS APPROVED.

GENERAL NOTES: USE METRIC EQUIVALENTS AS REQUIRED.
COMPLETE TECHNICAL PROVISIONS ARE ON FILE WITH THE TRANSPORTATION ENGINEERING DIVISION.

TRANSPORTATION	DATE 1/10	CITY OF MORENO VALLEY PREPARED BY CAPITAL PROJECTS
APPROVED BY PUBLIC WORKS DIRECTOR/ CITY ENGINEER	DIVISION MANAGER INITIAL EL	**STREET NAME SIGN SPECIFICATIONS**
		1 of 1 NO. **402**

STANDARD ABBREVIATIONS

ALLEY / ALLY / ALY	AY	LAKE / LAKES	LK
AVENUE / AVE / AVENIDA	AV	LANE	LN
BEACH	BCH	MANOR	MNR
BOULEVARD	BL	MOUNT	MT
BRIDGE	BR	MOUNTAIN	MTN
BROOK	BRK	PARK	PK
CANAL	CNL	PARKWAY	PKWY
CANYON	CYN	PLACE	PL
CENTER	CNTR	PLAZA	PLAZA
CIRCLE	CIR	POINT	PT
COAST	CST	RANCH / RANCHO	RCH
CORNER / CORNERS	COR	RIVER	RV
COURT	CT	ROAD	RD
CREEK	CEK	SPRING / SPRINGS	SPG
DRIVE	DR	SQUARE	SQ
EASTWAY	EWY	STATION	STA
ESTATES	EST	STREET	ST
EXPRESSWAY	EXPWY	SUMMIT	SUM
FIELD / FIELDS	FLD	TERRACE	TER
FORT	FT	TRAIL / TRAILS	TRL
FREEWAY	FWY	VALLEY	VLY
GROVE	GR	VILLAGE	VLG
HEIGHTS	HTS	WALK	WK
HIGHWAY	HWY	WAY	WY
HOME	HM	WESTWAY	WWY
ISLAND / ISLANDS	ISL		
JUNCTION	JCT		

TRANSPORTATION DATE 1/05	CITY OF MORENO VALLEY PREPARED BY CAPITAL PROJECTS	
APPROVED BY PUBLIC WORKS DIRECTOR/ CITY ENGINEER	DIVISION MANAGER INITIAL	**STREET NAME ABBREVIATIONS**	1 of 1 NO. **403**

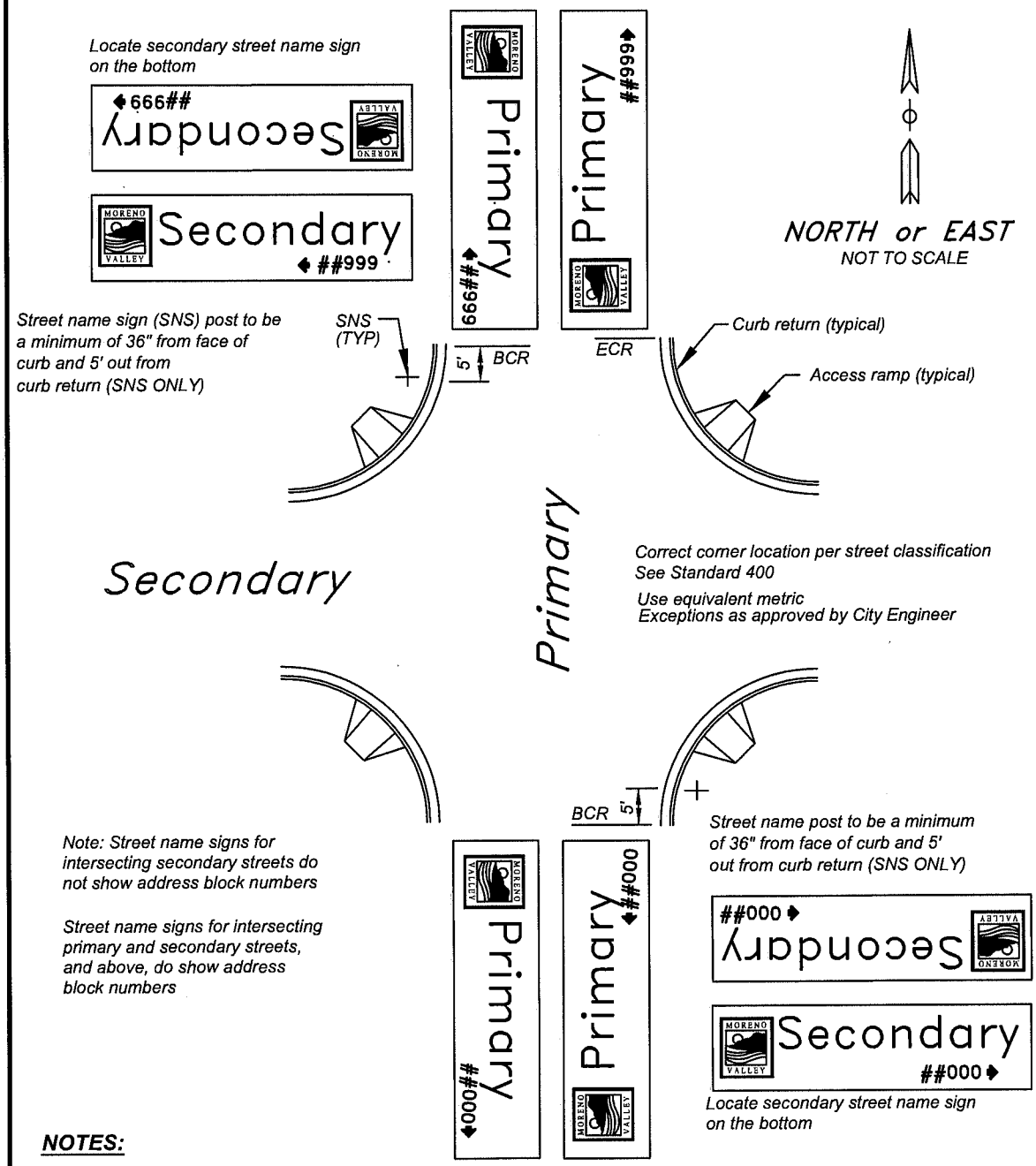

NOTES:

1.) ADDRESS BLOCK NUMBER POINTS IN THE LEADING DIRECTION - INCREASING ADDRESS NUMBERS FOR SOUTH AND EAST (##000➡) AND DECREASING ADDRESS NUMBERS FOR WEST AND NORTH (⬅##999).

2.) SEE STANDARD 400 FOR CORRECT CORNER LOCATION BASED ON STREET CLASSIFICATION.

TRANSPORTATION	DATE 1/12	CITY OF MORENO VALLEY PREPARED BY CAPITAL PROJECTS
APPROVED BY DEPUTY PUBLIC WORKS DIRECTOR/ ACTING CITY ENGINEER	DIVISION MANAGER INITIAL EL	**STREET NAME SIGN PLACEMENT**
		1 of 1 NO. **404**

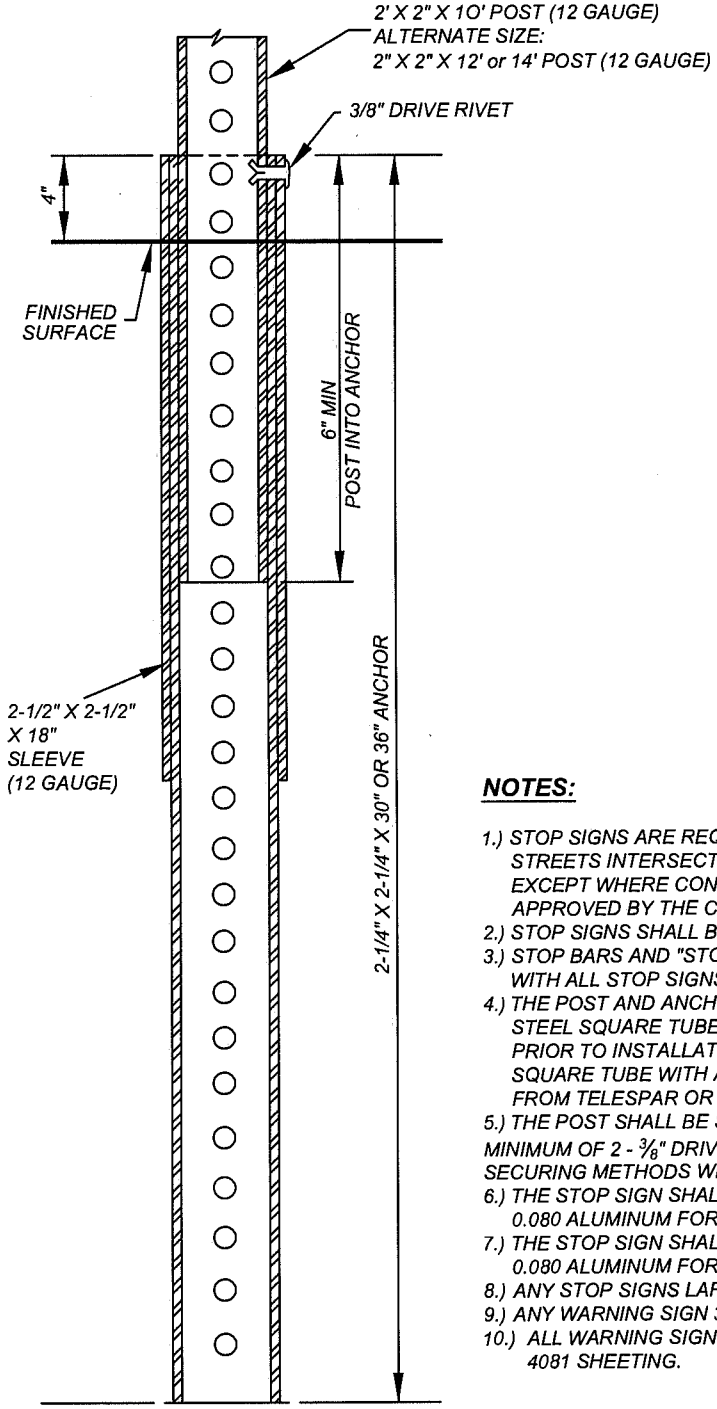

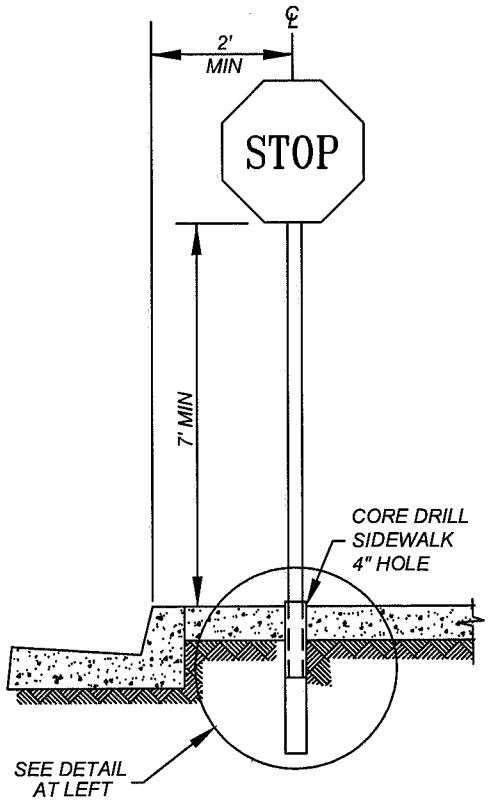

NOTES:

1.) STOP SIGNS ARE REQUIRED FOR TRAFFIC CONTROL ON ALL LOCAL STREETS INTERSECTING WITH DESIGNATED "THROUGH STREETS" EXCEPT WHERE CONTROL IS BY A TRAFFIC SIGNAL SYSTEM OR WHERE APPROVED BY THE CITY ENGINEER.
2.) STOP SIGNS SHALL BE INSTALLED PER THE ABOVE DRAWINGS.
3.) STOP BARS AND "STOP" LEGEND SHALL BE PAINTED IN CONJUNCTION WITH ALL STOP SIGNS.
4.) THE POST AND ANCHOR SHALL BE MADE OF HOT DIPPED GALVANIZED STEEL SQUARE TUBE BY TELESPAR OR EQUAL APPROVED IN WRITING PRIOR TO INSTALLATION. ALL SIGN POSTS ARE TO BE 2" TELESPAR SQUARE TUBE WITH ANCHOR BREAKAWAY ASSEMBLY, AVAILABLE FROM TELESPAR OR EQUAL.
5.) THE POST SHALL BE SECURED TO THE ANCHOR ASSEMBLY WITH A MINIMUM OF 2 - 3/8" DRIVE RIVET ABOVE THE SURFACE. NO BOLT-THROUGH" SECURING METHODS WILL BE ALLOWED.
6.) THE STOP SIGN SHALL BE 36" X 36" PRISMATIC REFLECTIVE SHEETING 0.080 ALUMINUM FOR MAJOR ARTERIALS.
7.) THE STOP SIGN SHALL BE 30" X 30" PRISMATIC REFLECTIVE SHEETING 0.080 ALUMINUM FOR RESIDENTIALS STREETS.
8.) ANY STOP SIGNS LARGER THAN 36" SHALL HAVE BACK BRACING.
9.) ANY WARNING SIGN 36" OR LARGER SHALL HAVE BACK BRACING.
10.) ALL WARNING SIGNS SHALL HAVE TYPE II DG3 FLOURECENT YELLOW 4081 SHEETING.

TRANSPORTATION	DATE 1/10	CITY OF MORENO VALLEY PREPARED BY CAPITAL PROJECTS
APPROVED BY PUBLIC WORKS DIRECTOR/ CITY ENGINEER	DIVISION MANAGER INITIAL EL	**STOP SIGN INSTALLATION**
		1 of 2 NO. **406A**

BAND-IT	-	C406 OR EQUAL. 316 STAINLESS STEEL $^3/_4$" OR 19.05mm WIDTH .030" OR .76mm THICKNESS
BRACKET	-	BAND-IT, DOO1 OR EQUAL. 1 BOLT STRAIGHT LEG STAINLESS STEEL.
BUCKLES	-	BAND-IT C456 OR EQUAL. EAR LOCKED 316 STAINLESS STEEL $^3/_4$" OR 19.05mm.
BOLTS	-	1" x $^5/_{16}$" COARSE THREAD STAINLESS STEEL.
WASHERS	-	ALL SIGNS SHALL BE INSTALLED WITH $^5/_{16}$" ZINC COATED WASHERS LARGER THAN THE HEAD OF THE BOLT. ANY SIGN 24" OR LARGER SHALL BE INSTALLED WITH WASHERS NO LESS THAN 1" OUTSIDE DIAMETER ANY SIGN 30" OR LARGER SHALL BE INSTALLED WITH WASHERS NO LESS THAN 1-$^1/_2$" OUTSIDE DIAMETER (FENDER WASHER)

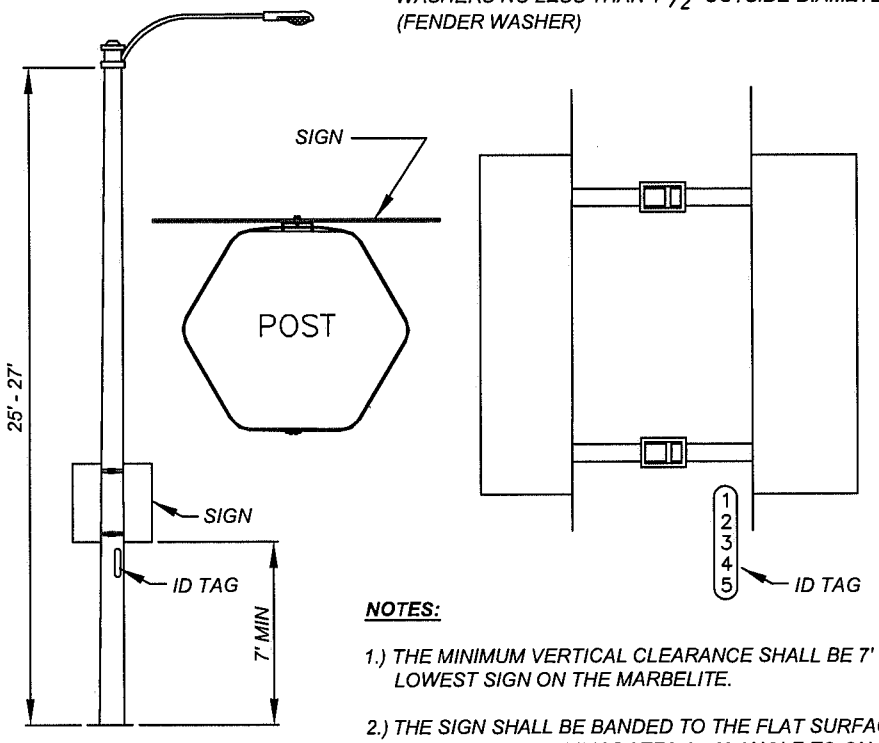

NOTES:

1.) THE MINIMUM VERTICAL CLEARANCE SHALL BE 7' TO THE BOTTOM OF THE LOWEST SIGN ON THE MARBELITE.

2.) THE SIGN SHALL BE BANDED TO THE FLAT SURFACE OF THE MARBELITE THAT BEST ACCOMMODATES A 90° ANGLE TO ON COMING TRAFFIC UNLESS OTHERWISE SPECIFIED.

3.) THE BAND SHALL BE TIGHTENED TO A POINT AT WHICH IT DOES NOT BREAK, YET PREVENTS MOVEMENT BY HAND OF THE SIGN, BAND, OR BRACKET.

4.) ALL SIGNS BEING BANDED TO MARBELITE SHALL HAVE NO LESS THAN 2 BANDS (UPPER AND LOWER). ANY SIGN LARGER THAN 36" SHALL HAVE NO LESS THAN 3 BANDS (UPPER, LOWER, AND MIDDLE).

5.) UNDER NO CIRCUMSTANCES SHALL THE BANDS COVER THE IDENTIFICATION TAG ON THE MARBELITE.

6.) INSTALLATION OF 2 OR MORE SIGNS ON A SINGLE POST SHALL NOT OVERLAP. SIGNS SHOULD HAVE A 1" GAP BETWEEN EACH SIGN.

TRANSPORTATION	DATE 1/10	CITY OF MORENO VALLEY PREPARED BY CAPITAL PROJECTS
APPROVED BY PUBLIC WORKS DIRECTOR/ CITY ENGINEER	DIVISION MANAGER INITIAL EL	**MARBELITE SIGN INSTALLATION**
		2 of 2 NO. **406B**

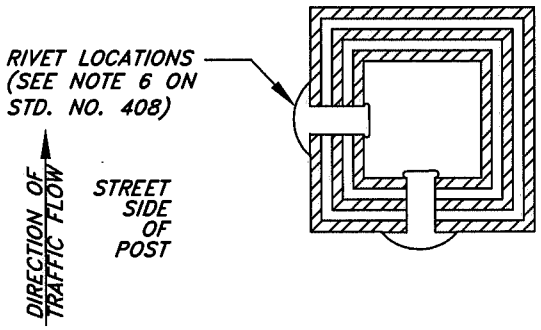

SECTION "A-A"

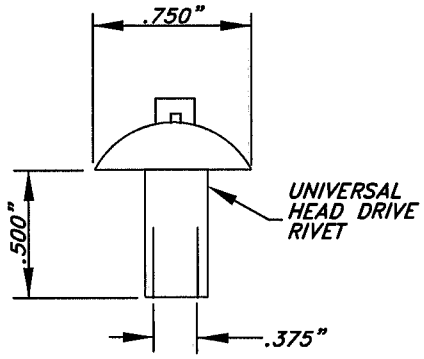

RIVET DETAIL

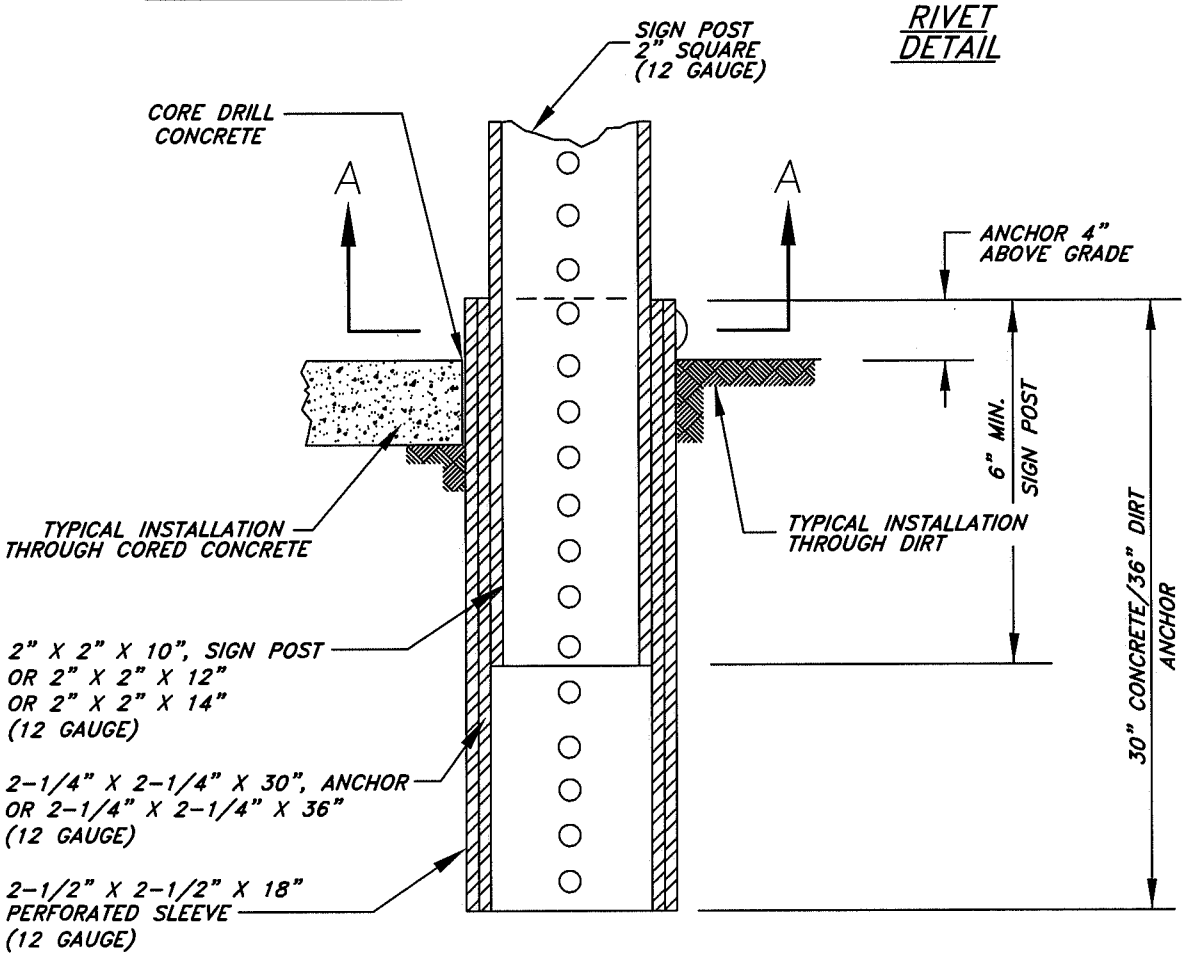

TYPICAL SECTION

TRANSPORTATION	DATE 2/07	CITY OF MORENO VALLEY PREPARED BY CAPITAL PROJECTS
APPROVED BY PUBLIC WORKS DIRECTOR/ CITY ENGINEER	DIVISION MANAGER INITIAL	**SIGN POST INSTALLATION**
		1 of 1 NO. **407**

NOTES:

1.) SQUARE PERFORATED STEEL TUBE POSTS WITH TWO PIECE ANCHOR AND SLEEVE, "TELESPAR", SHALL BE USED FOR ALL TRAFFIC CONTROL AND INFORMATIONAL SIGNS WITHIN ROAD RIGHT-OF-WAY.

2.) THE NUMBER OF POSTS REQUIRED FOR SIGN INSTALLATION SHALL BE DETERMINED BY THE AREA OF THE SIGN OR COMBINATION OF SIGNS TO BE INSTALLED. A SINGLE POST SHALL BE USED WHERE BOTH THE LENGTH AND WIDTH ARE 48" OR LESS. DOUBLE POSTS SHALL BE USED WHERE EITHER THE LENGTH OR THE WIDTH EXCEEDS 48".

3.) THE 2 PIECE ANCHOR AND SLEEVE ASSEMBLY SHALL CONSIST OF A 2 ¼" SQUARE BY 30" (THROUGH SIDEWALK) OR 36" (THROUGH SOIL) ANCHOR WITH A 2 ½" SQUARE BY 18" SLEEVE. ALL SLEEVES AND ANCHORS SHALL BE 12 GAUGE.

4.) THE ANCHOR AND SLEEVE ASSEMBLIES SHALL BE DRIVEN SIMULTANEOUSLY UNTIL ONLY 4" REMAINS ABOVE GROUND LEVEL.

5.) ALL DIRT SHALL BE REMOVED FROM THE INSIDE TOP 6" MIN. OF THE ANCHOR ASSEMBLY TO ALLOW FOR INSTALLATION OF THE SIGN POST.

6.) INSTALL THE 2" SQUARE SIGN POST MINIMUM 6" INTO THE ANCHOR ASSEMBLY AND SECURE IN PLACE WITH TWO ⅜" DRIVE RIVETS AS SHOWN. THE RIVETS SHALL BE INSTALLED ON THE SIDE FACING TRAFFIC FLOW AND THE SIDE OF APPROACHING TRAFFIC AS SHOWN IN ORDER TO ACHIEVE THE MAXIMUM BREAK-AWAY EFFECT.

7.) INSTALLATION ACCORDING TO THESE REQUIREMENTS IS ESSENTIAL TO MAINTAIN THE BREAK-AWAY CHARACTERISTICS OF THE POST SYSTEM. UNDER NO CIRCUMSTANCES SHALL THE ANCHOR ASSEMBLY BE SECURED IN CONCRETE FOOTINGS.

8.) THE BOTTOM OF THE LOWEST SIGN ON THE POST SHALL BE A MINIMUM OF 7 FEET ABOVE THE FINISHED SURFACE.

9.) SEE STANDARD PLAN NO. 409 FOR PLACEMENT OF SIGN POST.

10.) ALL ANCHOR ASSEMBLIES SHALL BE CORE DRILLED THROUGH CONCRETE AND ASPHALT.

11.) ALL SIGNS ATTACHED TO PERFORATED POSTS SHALL HAVE ZINC COATED OR S.S. WASHERS BEHIND THE RIVET THAT ARE LARGER THAN THE HEAD OF THE RIVET.

12.) ALL REGULATORY, WARNING AND GUIDE SIGNS INSTALLED SHALL BE 0.080 INCHES IN THICKNESS.

13.) ALL SIGNS 36" OR LARGER SHALL BE INSTALLED WITH BACK BRACES SPECIFICALLY DESIGNED FOR 2" SQUARE PERFORATED POSTS. (2" RISE)

TRANSPORTATION	DATE 01/09	CITY OF MORENO VALLEY PREPARED BY CAPITAL PROJECTS
APPROVED BY PUBLIC WORKS DIRECTOR/ CITY ENGINEER	DIVISION MANAGER INITIAL EL	**SIGN POST INSTALLATION NOTES**
		1 of 1 NO. **408**

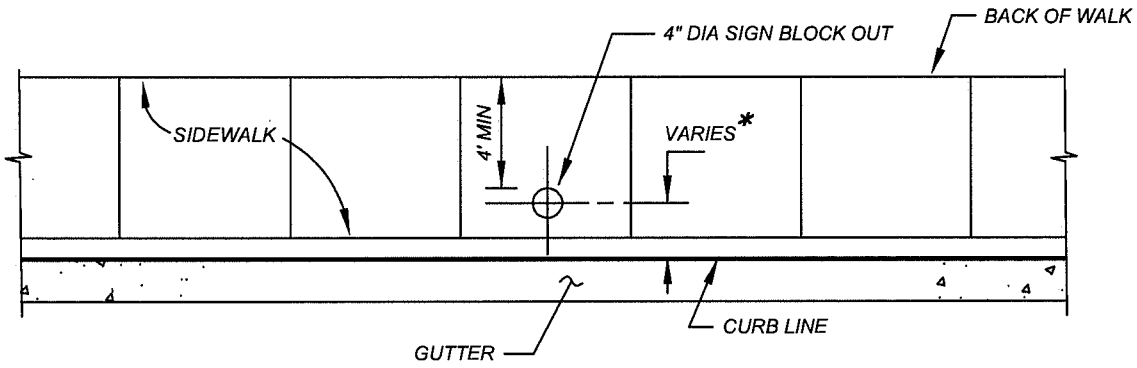

SIDEWALK LOCATION

*DISTANCE DETERMINED BY WIDTH OF SIGN.

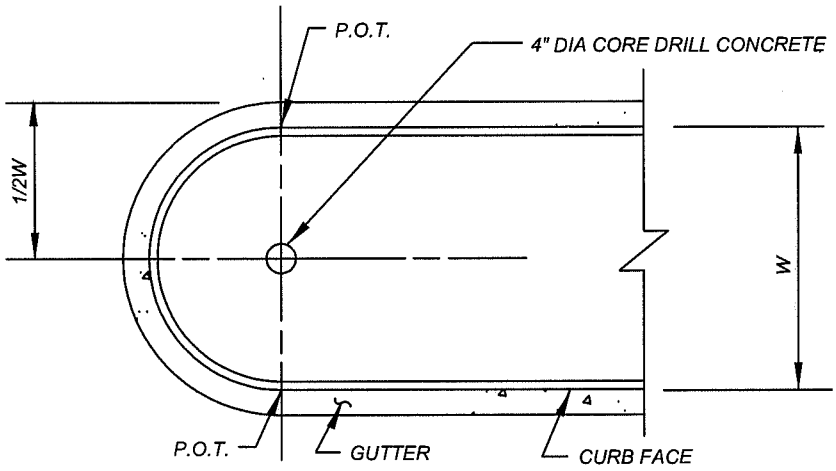

MEDIAN LOCATION

NOTES:

1.) SIGN POST 4" CORE DRILL SHALL BE USED FOR ANY SIGN IN CONCRETE.

2.) SIGNS LARGER THAN 48 INCHES OR LOCATIONS WHERE SIDEWALKS ARE LESS THAN 5 FEET WIDE, SIGN POST MUST BE INSTALLED BEHIND THE SIDEWALK.

3.) SEE STANDARD PLAN NO. 213 FOR SIDEWALK PLACEMENT AROUND OBSTRUCTIONS.

TRANSPORTATION	DATE 01/11	CITY OF MORENO VALLEY PREPARED BY CAPITAL PROJECTS
APPROVED BY PUBLIC WORKS DIRECTOR/ CITY ENGINEER	DIVISION MANAGER INITIAL EL	SIGN POST BLOCK OUT
		1 of 1 NO. 409

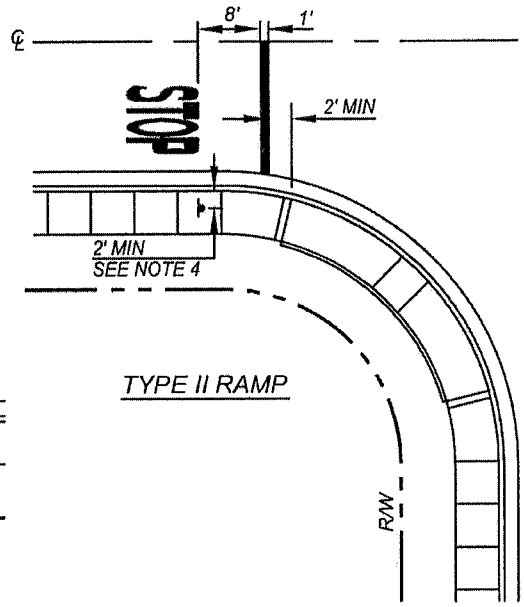

TYPE II RAMP

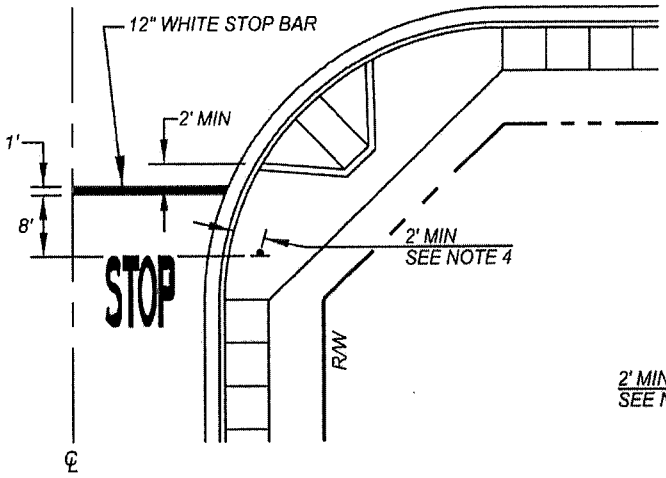

SINGLE TYPE I RAMP

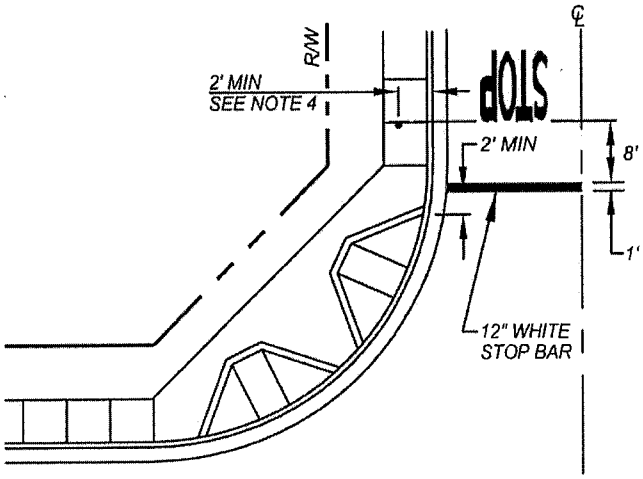

DUAL TYPE I RAMPS

NOTES:

1.) ALL LETTERS WILL BE IN CONFORMANCE WITH THE CALTRANS STANDARD FOR PAVEMENT MARKINGS WORDS (LATEST EDITION).

2.) ONE STOP LEGEND SHALL BE INSTALLED IN CENTER OF EACH TRAVEL LANE.

3.) STOP BAR AND PAVEMENT MARKINGS SHALL BE THERMOPLASTIC.

4.) IF SIDEWALK IS LESS THAN 6' WIDE , THE SIGN AND POST SHALL BE INSTALLED BEHIND THE SIDEWALK.

TRANSPORTATION	DATE 01/13	CITY OF MORENO VALLEY PREPARED BY CAPITAL PROJECTS
APPROVED BY PUBLIC WORKS DIRECTOR/ CITY ENGINEER	DIVISION MANAGER INITIAL EL	**STOP BAR LEGEND PLACEMENT**
		1 of 1 NO. **410**

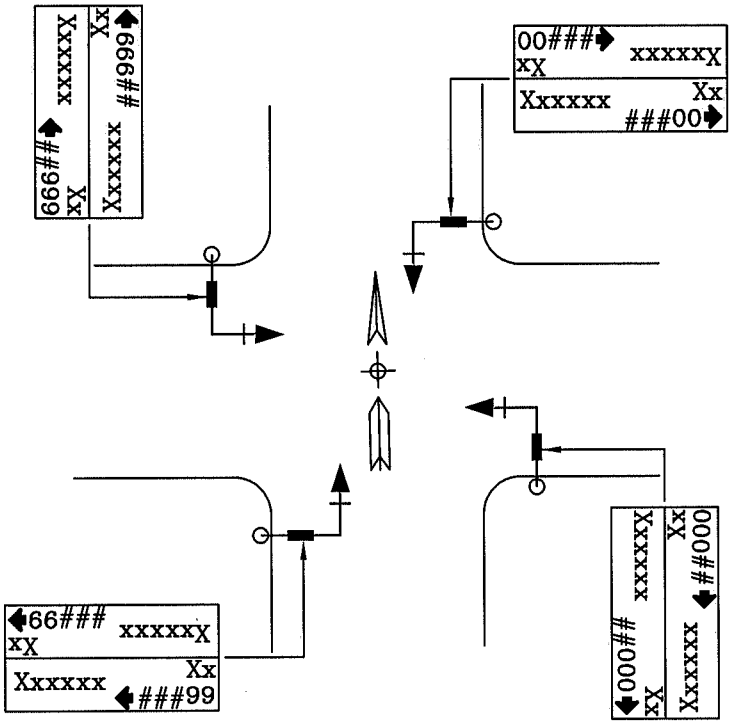

NEW PANEL:

BACKGROUND:
BLUE BACKGROUND WITH WHITE (SILVER) LEGEND AND NUMBERS.

LETTER STYLE:
FHWA SERIES C

LETTER SIZE:
STREET NAME.....8" UPPER CASE AND 6" LOWER CASE
BLOCK NUMBERS.....4"
STREET NAME SUFFIX..4" UPPER CASE AND 3" LOWER CASE

NOTE:

1.) ALL SPECIFICATIONS SHALL BE PER CALTRANS STANDARD PLAN ES-7O TYPE "A" SIGN EXCEPT AS NOTED ABOVE.

2.) SEE STANDARDS 419B, 419C AND 419D FOR INTERNALLY ILLUMINATED STREET SIGN SPECIFICATIONS.

TRANSPORTATION	DATE 1/10	CITY OF MORENO VALLEY PREPARED BY CAPITAL PROJECTS
APPROVED BY PUBLIC WORKS DIRECTOR/ CITY ENGINEER	DIVISION MANAGER INITIAL EL	**INTERNALLY ILLUMINATED STREET NAME SIGN**
		1 of 4 NO. **419A**

INTERNALLY ILLUMINATED STREET NAME SIGN

THE SIGN PANEL, SIZED AS REQUIRED, MUST BE A MINIMUM 0.060 INCH THICK ULTRAVIOLET PROTECTED CLEAR POLYCARBONATE (LEXAN) WITH TRANSLUCENT HIGH PERFORMANCE WIDE ANGLE PRISMATIC LENS REFLECTIVE SHEETING (3M TRANSLUCENT DIAMOND GRADE VIP 3990T OR APPROVED EQUIVALENT).

THE CLEAR LEXAN SIGN PANEL MUST BE COVERED ON ONE SIDE WITH REFLECTIVE SHEETING AND MUST BE SCREEN PRINTED BLUE ON THE SHEETING SIDE USING SHEETING MANUFACTURERS MATCH COMPONENT INK (3M 883i) SO THAT THE LEGENDS ARE WHITE WITH A BLUE BACKGROUND. THE BLUE MUST MATCH THE STANDARD CALTRANS BLUE HIGHWAY GUIDE SIGNS.

THE FINISHED SIGN MUST BE IN CONFORMANCE WITH CITY STANDARD 419 AND HAVE A BLUE BACKGROUND WITH SPECIFIED STREET NAME IN WHITE (SILVER) LEGENDS (LETTERS) AND SPECIFIED NUMBERS IN THE FOLLOWING SIZES:

STREET NAME LETTERS ARE WHITE 8" HIGH UPPERCASE AND WHITE 6" HIGH LOWERCASE.
ADDRESS NUMBERS MUST BE WHITE 4" HIGH.
STREET SUFFIX MUST BE WHITE 4" HIGH UPPERCASE AND WHITE 3" HIGH LOWERCASE.
A ½" WHITE BORDER MUST BE VISIBLE WHEN THE SIGN PANEL IS PLACED INSIDE THE FRAME.
USE METRIC EQUIVALENTS AS NECESSARY. LOWERCASE LETTERS MAY BE IN PROPORTION TO UPPERCASE LETTERS.

ALL LETTERS AND NUMBERS MUST BE FHWA (FEDERAL HIGHWAY ADMINISTRATION) SERIES C AND MEET CASE REQUIREMENTS AND THE LETTER SPACING MUST MEET FHWA SPACING GUIDELINE. THE ADDRESS BLOCK NUMBER ARROW MUST BE THE STANDARD HIGHWAY TYPE AND POINT IN THE LEADING DIRECTION - INCREASING ADDRESS NUMBERS FOR SOUTH AND EAST (##000➡) AND DECREASING ADDRESS NUMBERS FOR WEST AND NORTH (⬅##999).

THE FINISHED SIGN PANEL MUST INCLUDE AND BE INSERTED IN A FRAME AND TOGETHER FIT INTO AN EXISTING TYPE A INTERNALLY ILLUMINATED STREET SIGN NAME SIGN. SEE CALTRANS STANDARD PLAN ES-7O.

ALL SPECIFICATIONS MUST MEET CALTRANS STANDARD PLAN ES-7O TYPE A 18" x 72" SIGN EXCEPT AS NOTED. IT IS THE SIGN FABRICATOR'S RESPONSIBILITY TO VERIFY THE DIMENSIONS OR SIZE OF THE EXISTING SIGN PANELS AND SIGN PANEL FRAME BEING REPLACED. SLIGHT VARIATIONS ARE ALLOWED AND MUST BE APPROVED BY THE CITY ENGINEER.

THE LIGHT SOURCE SHALL BE LIGHT EMITTING DIODE (LED) TECHNOLOGY, ARCHIPELAGO LIGHTING LUMEN-STARR OR APPROVED EQUIVALENT. THE POWER SUPPLY SHALL INCLUDE A CLASS 2 LED DRIVER WITH A POWER FACTOR OF AT LEAST 99 PERCENT AND TOTAL HARMONIC DISTORTION OF LESS THAN 10 PERCENT, MOUNTED EXTERNALLY FROM THE LED LAMPS, CAPABLE OF BEING MOUNTED TO AN EXISTING BALLAST TRAY. THE LED LAMPS SHALL BE MOUNTED TO A ROTATING DUAL LAMP TUBE HOUSING CONSTRUCTED OF ALUMINUM WITH RECESSED LEDS, SIZE NOT TO EXCEED 5/8" DIAMETER PER LAMP. LAMPS SHALL MOUNT IN ADAPTERS MANUFACTURED TO ACCOMMODATE SLIM LINE, HO, AND BI PIN EXISTING SOCKETS AS REQUIRED.

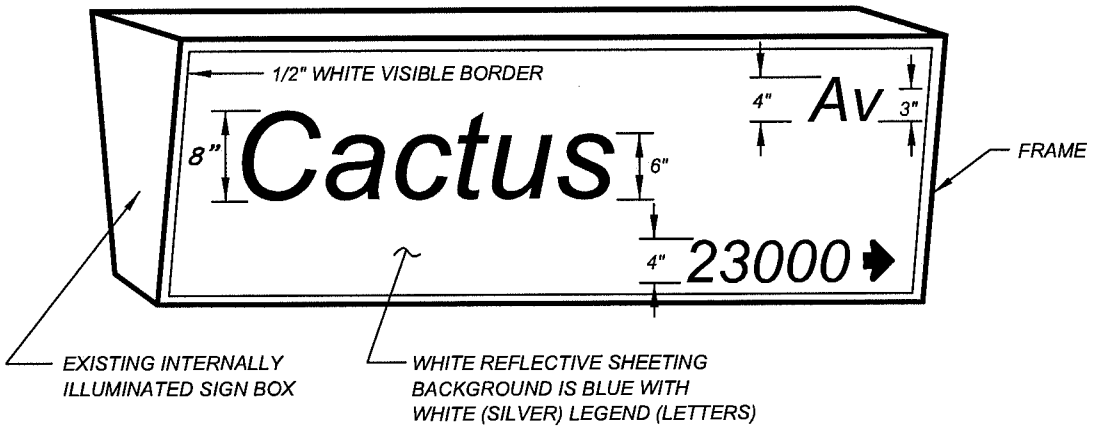

TRANSPORTATION	DATE 01/11	CITY OF MORENO VALLEY PREPARED BY CAPITAL PROJECTS
APPROVED BY PUBLIC WORKS DIRECTOR/ CITY ENGINEER	DIVISION MANAGER INITIAL EL	**INTERNALLY ILLUMINATED STREET NAME SIGN SPECIFICATIONS**
		2 of 4 NO. **419B**

RETROFIT INTERNALLY ILLUMINATED STREET NAME SIGN

THE SIGN PANEL, SIDE AS REQUIRED, MUST BE A MINIMUM 0.060 INCH THICK ULTRAVIOLET PROTECTED CLEAR POLYCARBONATE (LEXAN) WITH TRANSLUCENT HIGH PERFORMANCE WIDE ANGLE PRISMATIC LENS REFLECTIVE SHEETING (3M TRANSLUCENT DIAMOND GRADE VIP 3990T OR APPROVED EQUIVALENT).

THE CLEAR LEXAN SIGN PANEL MUST BE COVERED ON ONE SIDE WITH REFLECTIVE SHEETING AND MUST BE SCREEN PRINTED BLUE ON THE SHEETING SIDE USING SHEETING MANUFACTURERS MATCH COMPONENT INK (3M 883i) SO THAT THE LEGENDS ARE WHITE WITH A BLUE BACKGROUND. THE BLUE MUST MATCH THE STANDARD CALTRANS BLUE HIGHWAY GUIDE SIGNS.

THE FINISHED SIGN MUST BE IN CONFORMANCE WITH CITY STANDARD 419 AND HAVE A BLUE BACKGROUND WITH SPECIFIED STREET NAME IN WHITE (SILVER) LEGENDS (LETTERS) AND SPECIFIED NUMBERS IN THE FOLLOWING SIZES:

STREET NAME LETTERS ARE WHITE 8" HIGH UPPERCASE AND WHITE 6" HIGH LOWERCASE.
ADDRESS NUMBERS MUST BE WHITE 4" HIGH.
STREET SUFFIX MUST BE WHITE 4" HIGH UPPERCASE AND WHITE 3" HIGH LOWERCASE.
A ½" WHITE BORDER MUST BE VISIBLE WHEN THE SIGN PANEL IS PLACED INSIDE THE FRAME.
USE METRIC EQUIVALENTS AS NECESSARY. LOWERCASE LETTERS MAY BE IN PROPORTION TO UPPERCASE LETTERS.

ALL LETTERS AND NUMBERS MUST BE FHWA (FEDERAL HIGHWAY ADMINISTRATION) SERIES C AND MEET CASE REQUIREMENTS AND THE LETTER SPACING MUST MEET FHWA SPACING GUIDELINE. THE ADDRESS BLOCK NUMBER ARROW MUST BE THE STANDARD HIGHWAY TYPE AND POINT IN THE LEADING DIRECTION - INCREASING ADDRESS NUMBERS FOR SOUTH AND EAST (##000➡) AND DECREASING ADDRESS NUMBERS FOR WEST AND NORTH (⬅##999).

THE FINISHED SIGN PANEL MUST INCLUDE AND BE INSERTED IN A FRAME AND TOGETHER FIT INTO AN EXISTING TYPE A INTERNALLY ILLUMINATED STREET SIGN NAME SIGN. SEE CALTRANS STANDARD PLAN ES-7O.

ALL SPECIFICATIONS MUST MEET CALTRANS STANDARD PLAN ES-7O TYPE A 18" x 72" SIGN EXCEPT AS NOTED. IT IS THE SIGN FABRICATOR'S RESPONSIBILITY TO VERIFY THE DIMENSIONS OR SIZE OF THE EXISTING SIGN PANELS AND SIGN PANEL FRAME BEING REPLACED. SLIGHT VARIATIONS ARE ALLOWED AND MUST BE APPROVED BY THE CITY ENGINEER.

THE LIGHT SOURCE SHALL BE LIGHT EMITTING DIODE (LED) TECHNOLOGY, ARCHIPELAGO LIGHTING LUMEN-STARR OR APPROVED EQUIVALENT. THE POWER SUPPLY SHALL INCLUDE A CLASS 2 LED DRIVER WITH A POWER FACTOR OF AT LEAST 99 PERCENT AND TOTAL HARMONIC DISTORTION OF LESS THAN 10 PERCENT, MOUNTED EXTERNALLY FROM THE LED LAMPS, CAPABLE OF BEING MOUNTED TO AN EXISTING BALLAST TRAY. THE LED LAMPS SHALL BE MOUNTED TO A ROTATING DUAL LAMP TUBE HOUSING CONSTRUCTED OF ALUMINUM WITH RECESSED LEDS, SIZE NOT TO EXCEED 5/8" DIAMETER PER LAMP. LAMPS SHALL MOUNT IN ADAPTERS MANUFACTURED TO ACCOMMODATE SLIM LINE, HO, AND BI PIN EXISTING SOCKETS AS REQUIRED.

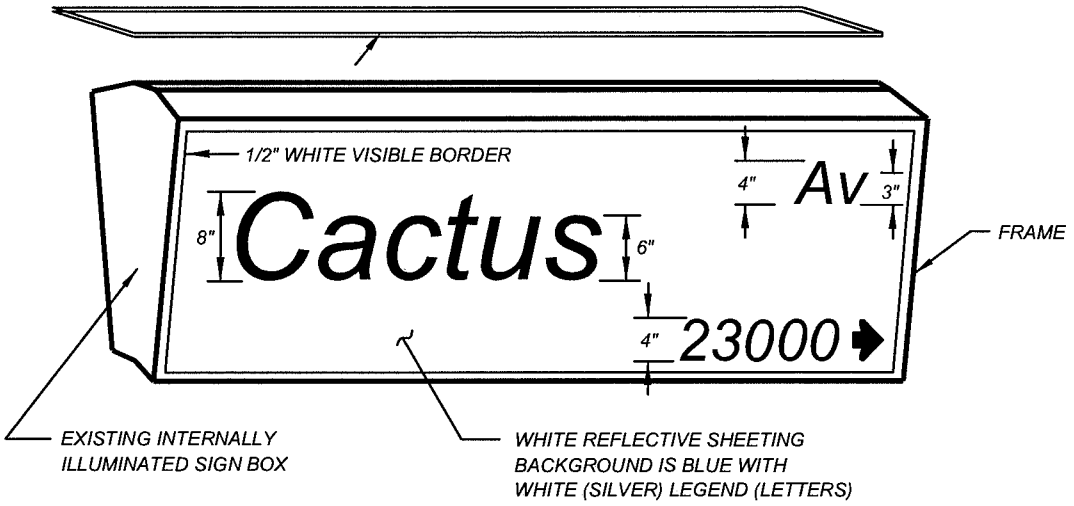

TRANSPORTATION	DATE 01/11	CITY OF MORENO VALLEY PREPARED BY CAPITAL PROJECTS
APPROVED BY PUBLIC WORKS DIRECTOR/ CITY ENGINEER	DIVISION MANAGER INITIAL EL	**INTERNALLY - RETROFIT ILLUMINATED STREET NAME SIGN SPECIFICATIONS**
		3 of 4 NO. **419C**

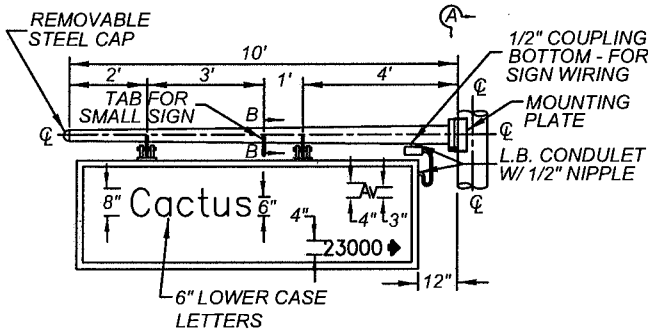

NOTES FOR MOUNTING ASSEMBLY

1. LOWER MOUNTING ASSEMBLY, WITH GASKET.
2. UPPER MOUNTING ASSEMBLY (TAB).
3. BOLT, 1/2", STAINLESS STEEL, WITH SELF-LOCKING NUT.
4. FLAT WASHER, STAINLESS STEEL.
5. BUSHING, BRONZE.
6. MOUNTING BOLT, 1/4" MINIMUM, WITH NUT AND LOCKWASHER, OR SELF-LOCKING NUT AND COTTER KEY.

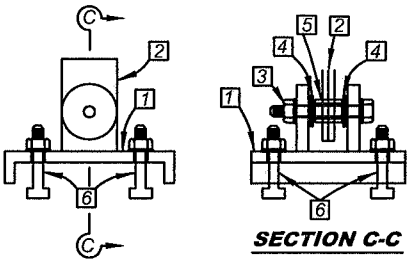

SECTION C-C

NOTE:

FOR INTERNALLY ILLUMINATED STREET NAME SIGN, MOUNTING HARDWARE, AND ELECTRICAL DETAILS SEE CITY STANDARD 419B, STATE STANDARD ES-7O AND THE SPECIAL PROVISIONS.

HORIZONTAL MAST ARM

INSTALL IISNS ON HORIZONTAL MAST ARM 8 FEET ABOVE TOP OF SMA SIMPLEX TO CENTER OF IISNS ARM SIMPLEX. THE MANUFACTURER SHALL PROVIDE CERTIFICATION TO THE CITY THAT THE POLE IS DESIGNED TO ACCOMMODATE THE ADDITIONAL MAST ARM, MOUNTINGS AND INTERNALLY ILLUMINATED STREET NAME SIGN.

NOTES FOR HORIZONTAL MAST ARM

ROUND TAPERED STEEL TUBE 0.1793" WITH MAXIMUM TAPER OF 0.14 INCHES PER FOOT AND 5 1/2" OD MAXIMUM AT POLE, ASTM A-36 & 53.
IN LIEU OF THE TORQUE REQUIREMENTS FOR HS BOLTS, CAP SCREWS SHALL BE TIGHTENED BY THE TURN-OF-NUT METHOD, 1/3 TURN FROM SNUG TIGHT CONDITION. NO WASHER WILL BE REQUIRED.
CALTRANS STANDARD DRAWING ES-6S, DETAIL 'F', FATIGUE RESISTANT WELD, IS REQUIRED AT IISNS ARM PLATE AND POLE BASE PLATE.

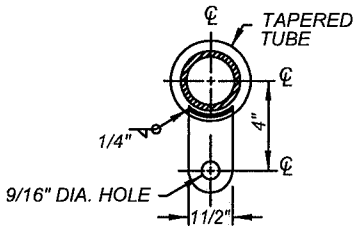

SECTION "B-B"

SPECIFICATIONS

DESIGN: AASHTO SPECIFICATIONS FOR THE DESIGN AND CONSTRUCTION OF STRUCTURAL SUPPORTS FOR HIGHWAY SIGNS, LUMINAIRES AND TRAFFIC SIGNALS, DATED 2004 (4TH EDITION).

WIND LOADINGS: 129 km/h (100 MPH) AASHTO

UNIT STRESSES
STRUCTURAL STEEL : fy = 331 MPa (TAPERED SHEET STEEL)
fy = 248 MPa UNLESS NOTED OTHERWISE

CONSTRUCTION: STANDARD SPECIFICATIONS AND THE SPECIAL PROVISIONS.

NOTES:

1. MATERIAL: STEEL OF 48,000 PSI MIN. YIELD AFTER FABRICATION.
2. HOT DIP GALVANIZED FINISH. PER ASTM A-123.
3. ALL WELDS SHALL CONFORM TO AWS D1.1 SPECIFICATIONS.
3. BASE PLATES AND FLANGES SHALL BE PER ASTM A-35 & A-36 STEEL

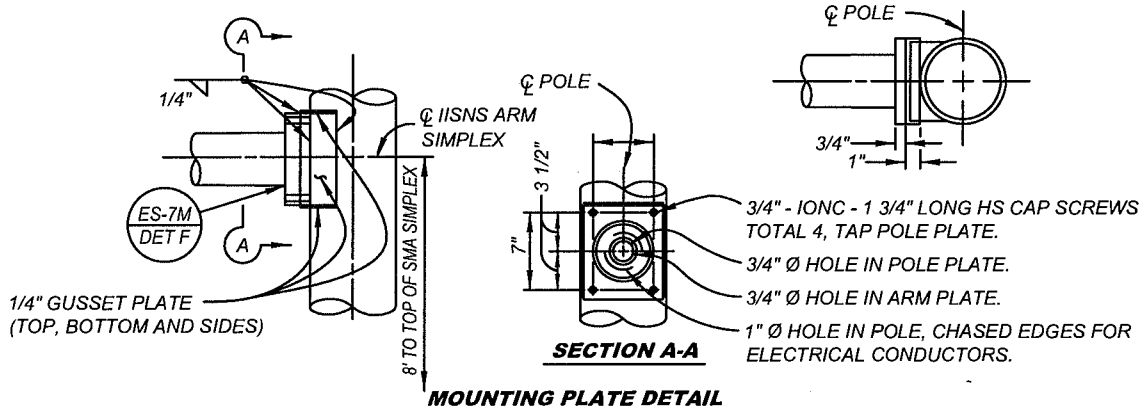

MOUNTING PLATE DETAIL

TRANSPORTATION	DATE 1/10	CITY OF MORENO VALLEY PREPARED BY CAPITAL PROJECTS
APPROVED BY PUBLIC WORKS DIRECTOR/ CITY ENGINEER	DIVISION MANAGER INITIAL EL	MOUNTING ASSEMBLY - ILLUMINATED STREET NAME SIGN SPECIFICATIONS
		4 of 4 NO. 419D

SECTION A-A

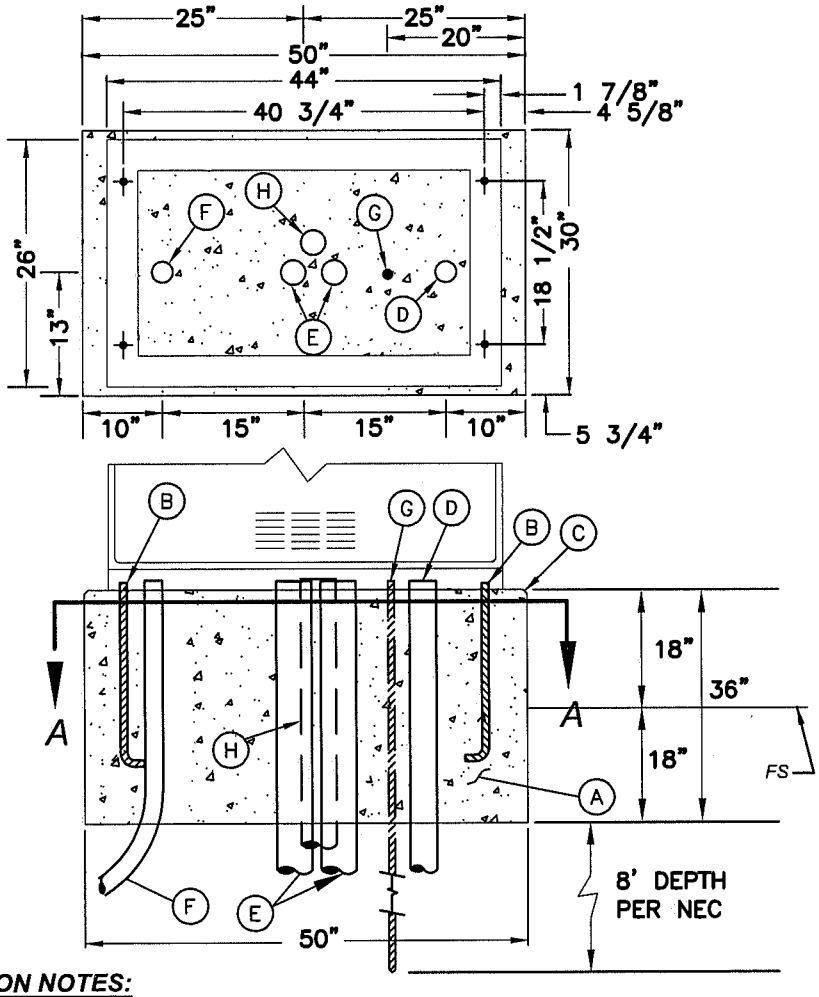

CONSTRUCTION NOTES:

- (A) 560-C-3250 PORTLAND CEMENT CONCRETE FOUNDATION.
- (B) 3/4" x 18" GALVANIZED ANCHOR BOLTS (ASTM A307).
- (C) 3/8" CHAMBER TYPICAL.
- (D) 2" SERVICE CONDUIT TO SERVICE ENCLOSURE.
- (E) 4" SIGNAL CONDUCTOR CONDUITS TO ADJACENT PULL BOX.
- (F) 2" CONDUIT FOR SIGNAL INTERCONNECT, PHONE OR FUTURE FIBER-OPTIC COMMUNICATION CABLE.
- (G) GROUND ROD, 8 FT MIN INTO EARTH, EXCLUDING CONCRETE (APPROXIMATELY 10.5 FT ROD).
- (H) 3" CONDUIT FOR FUTURE CONDUCTORS.

GENERAL NOTES:

1. INSTALL IN ACCORDANCE WITH CALTRANS STD PLAN ES-3C (NOTES 3, 7 AND 17 OF ES-4B MAY NOT APPLY).
2. TOP OF FOUNDATION SHALL BE 18" ABOVE FINISHED SURFACE.
3. FINAL LOCATION OF CONDUITS SHALL BE APPROVED PRIOR TO FOUNDATION POUR.
4. ALL CONDUITS IN CONTROLLER FOUNDATION SHALL BE HOT-DIPPED GALVANIZED RIGID STEEL.
5. THE FOUNDATION SHALL BE CONSTRUCTED USING A STEEL FORM. THE CONCRETE SHALL BE VIBRATED. THE OUTSIDE EXPOSED FINISH SURFACE SHALL BE FREE OF VOIDS/HOLES AND SHALL BE TO THE SATISFACTION OF THE ENGINEER.

TRANSPORTATION	DATE 1/12	CITY OF MORENO VALLEY PREPARED BY CAPITAL PROJECTS
APPROVED BY DEPUTY PUBLIC WORKS DIRECTOR/ ACTING CITY ENGINEER	DIVISION MANAGER INITIAL EL	TYPE P CONTROLLER CABINET FOUNDATION DETAIL
		1 of 2 NO. 423A

SECTION A-A

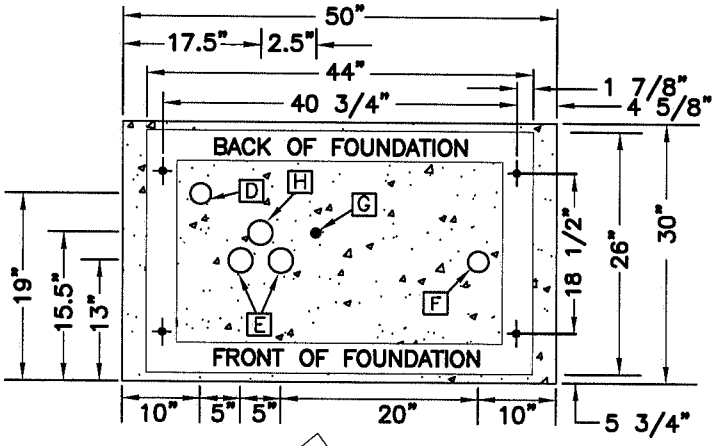

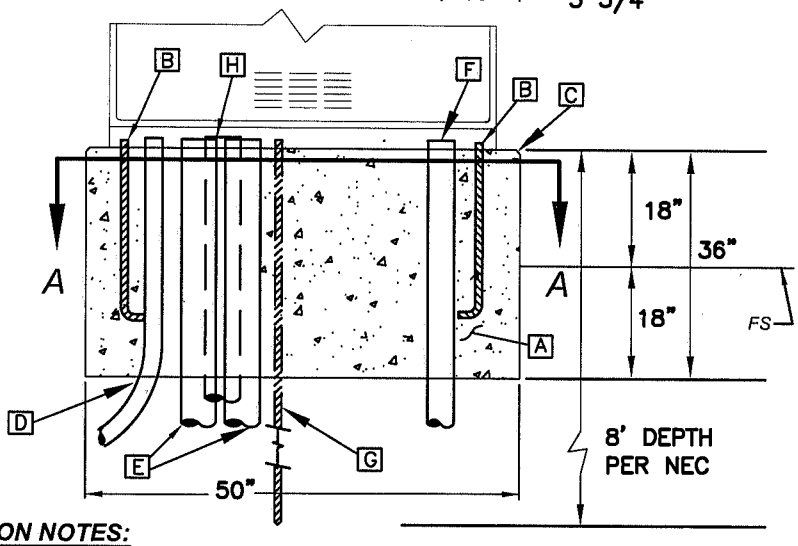

CONSTRUCTION NOTES:

- A — 560-C-3250 PORTLAND CEMENT CONCRETE FOUNDATION.
- B — 3/4" x 18" GALVANIZED ANCHOR BOLTS (ASTM A307).
- C — 3/8" CHAMBER TYPICAL.
- D — 2" SERVICE CONDUIT TO SERVICE ENCLOSURE.
- E — 4" SIGNAL CONDUCTOR CONDUITS TO ADJACENT PULL BOX.
- F — 2" CONDUIT FOR SIGNAL INTERCONNECT, PHONE OR FUTURE FIBER-OPTIC COMMUNICATION CABLE.
- G — GROUND ROD, 8 FT MIN INTO EARTH, EXCLUDING CONCRETE (APPROXIMATELY 10.5 FT ROD).
- H — 3" CONDUIT FOR FUTURE CONDUCTORS.

GENERAL NOTES:

1. INSTALL IN ACCORDANCE WITH CALTRANS STD PLAN ES-3C (NOTES 3, 7 AND 17 OF ES-4B MAY NOT APPLY).
2. TOP OF FOUNDATION SHALL BE 18" ABOVE FINISHED SURFACE.
3. FINAL LOCATION OF CONDUITS SHALL BE APPROVED PRIOR TO FOUNDATION POUR.
4. ALL CONDUITS IN CONTROLLER FOUNDATION SHALL BE HOT-DIPPED GALVANIZED RIGID STEEL.
5. THE FOUNDATION SHALL BE CONSTRUCTED USING A STEEL FORM. THE CONCRETE SHALL BE VIBRATED. THE OUTSIDE EXPOSED FINISH SURFACE SHALL BE FREE OF VOIDS/HOLES AND SHALL BE TO THE SATISFACTION OF THE ENGINEER.

TRANSPORTATION — DATE 1/12	CITY OF MORENO VALLEY PREPARED BY CAPITAL PROJECTS	
APPROVED BY DEPUTY PUBLIC WORKS DIRECTOR/ ACTING CITY ENGINEER	DIVISION MANAGER INITIAL EL	**TYPE 333 CONTROLLER CABINET FOUNDATION DETAIL**
		2 of 2 NO. **423B**

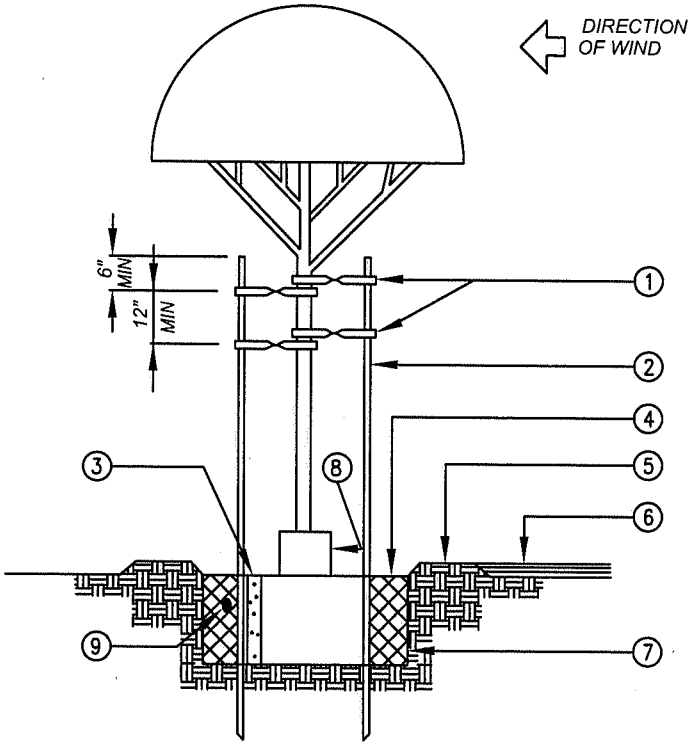

LEGEND:

1. TREE TIES 4 REQUIRED
2. 2" LODGEPOLE PINE STAKE
3. REFER TO STANDARD 527 FOR IRRIGATION METHOD
4. BACKFILL MIX PER SPECIFICATIONS
5. 4" BERM FOR TEMPORARY WATERING UNTIL SEEDING
6. 3" THICK SHREDDED MULCH - WHERE APPLICABLE IN PLANTER BEDS
7. PLANTING PIT: 2 TIMES WIDTH OF ROOT BALL & SAME DEPTH AS ROOT BALL
8. TRUNK GUARD IN TURF AREAS
9. PLACE PLANT TABS PER MANUFACTURERS RECOMMENDATION

NOTES:

1) INSTALL STAKES 12" MINIMUM FROM TREE TRUNK AND/OR OUTSIDE OF ROOTBALL.

SPECIAL DISTRICTS	DATE 1/10	CITY OF MORENO VALLEY PREPARED BY CAPITAL PROJECTS
APPROVED BY PUBLIC WORKS DIRECTOR/ CITY ENGINEER	DIVISION MANAGER INITIAL	TYPICAL DOUBLE STAKE TREE (15 GAL. - 24" BOX)
		1 of 4 NO. 531A

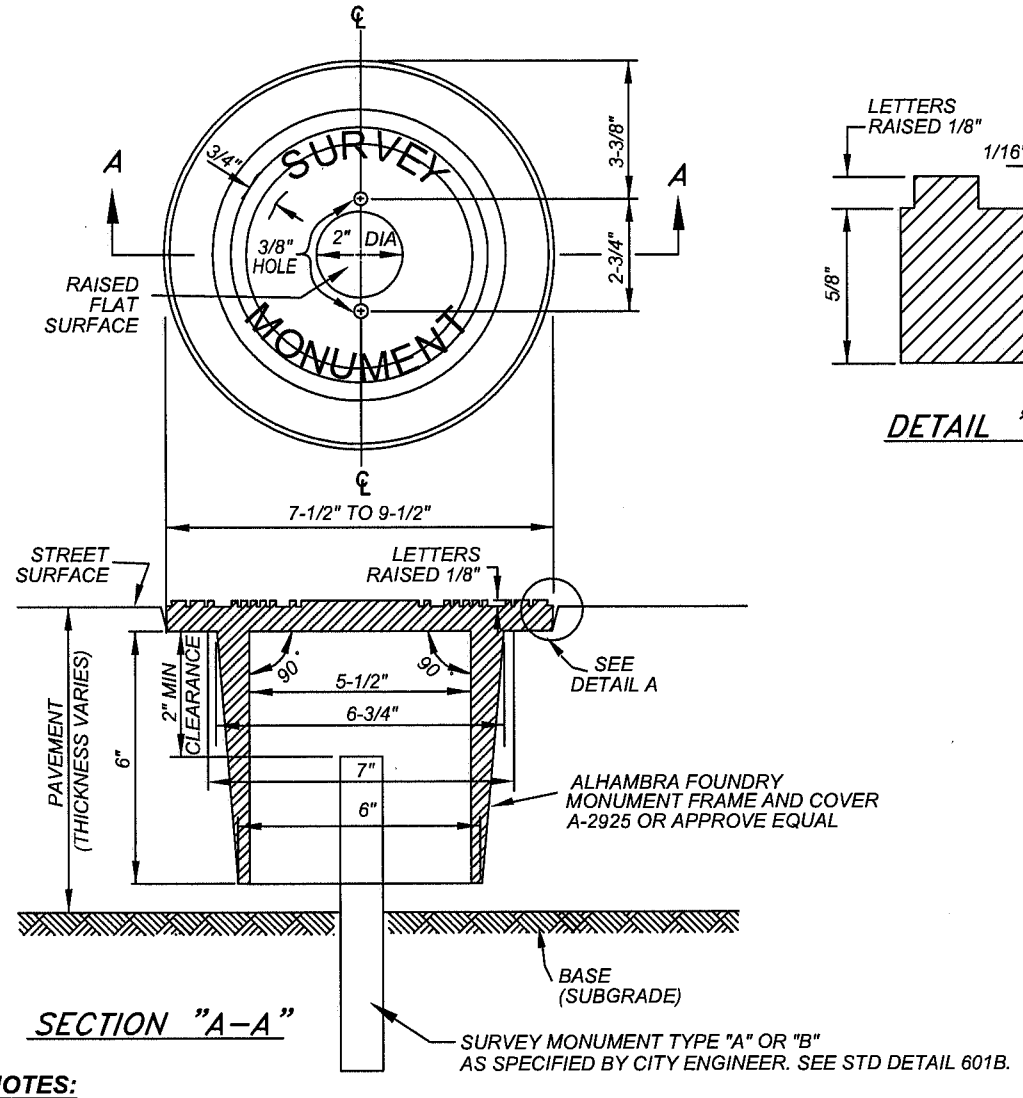

SECTION "A–A"

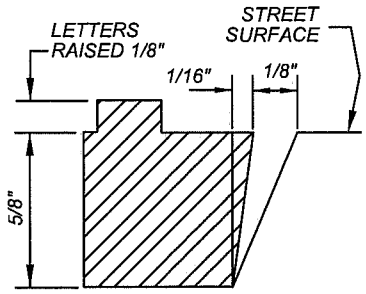

DETAIL "A"

NOTES:

1.) CAST IRON SHALL CONFORM TO SECTION 206-3 OF "STANDARD SPECIFICATIONS FOR PUBLIC WORKS CONSTRUCTION."

2.) LETTERING SHALL BE AS SHOWN HEREON, 1/8" HIGH, AND SHALL BE CAST INTEGRAL WITH THE CASTING.

3.) THE 3/8" DIAMETER HOLES IN THE COVER SHALL BE AS SHOWN HEREON, AND SHALL EITHER BE FORMED BY PROVIDING A REMOVABLE PLUG PRIOR TO CASTING OR DRILLED AFTER CASTING HAS COOLED AND BEFORE COATING IS APPLIED. THE HOLES SHALL NOT BE PUNCHED.

4.) AFTER CASTING HAS COOLED, IT SHALL BE GIVEN AN ASPHALTIC COATING CONFORMING TO SECTION 206-3.6 OF THE STANDARD SPECIFICATIONS.

5.) DURING INSTALLATION, WHEN THE PAVEMENT IS FOUND TO BE LESS THAN 6-5/8" THICK. THE BASE OF THE MONUMENT COVER SHALL BE CUT SO THAT IT DOES NOT EXTEND INTO THE BASE. APPLY A COAT OF ASPHALTIC COATING OR ASPHALT PAINT TO ANY UNCOATED SURFACE OR CUTEDGE.

6.) MONUMENTS AT STREET INTERSECTIONS, STANDARD KNUCKLE INTERSECTIONS, AND CUL-DE-SAC RADIAL POINTS SHALL HAVE MONUMENT COVERS.

CAPITAL PROJECTS	DATE 01/11	CITY OF MORENO VALLEY PREPARED BY CAPITAL PROJECTS	
APPROVED BY PUBLIC WORKS DIRECTOR/ CITY ENGINEER	DIVISION MANAGER INITIAL	**MONUMENT COVER**	1 of 5 NO. **601A**

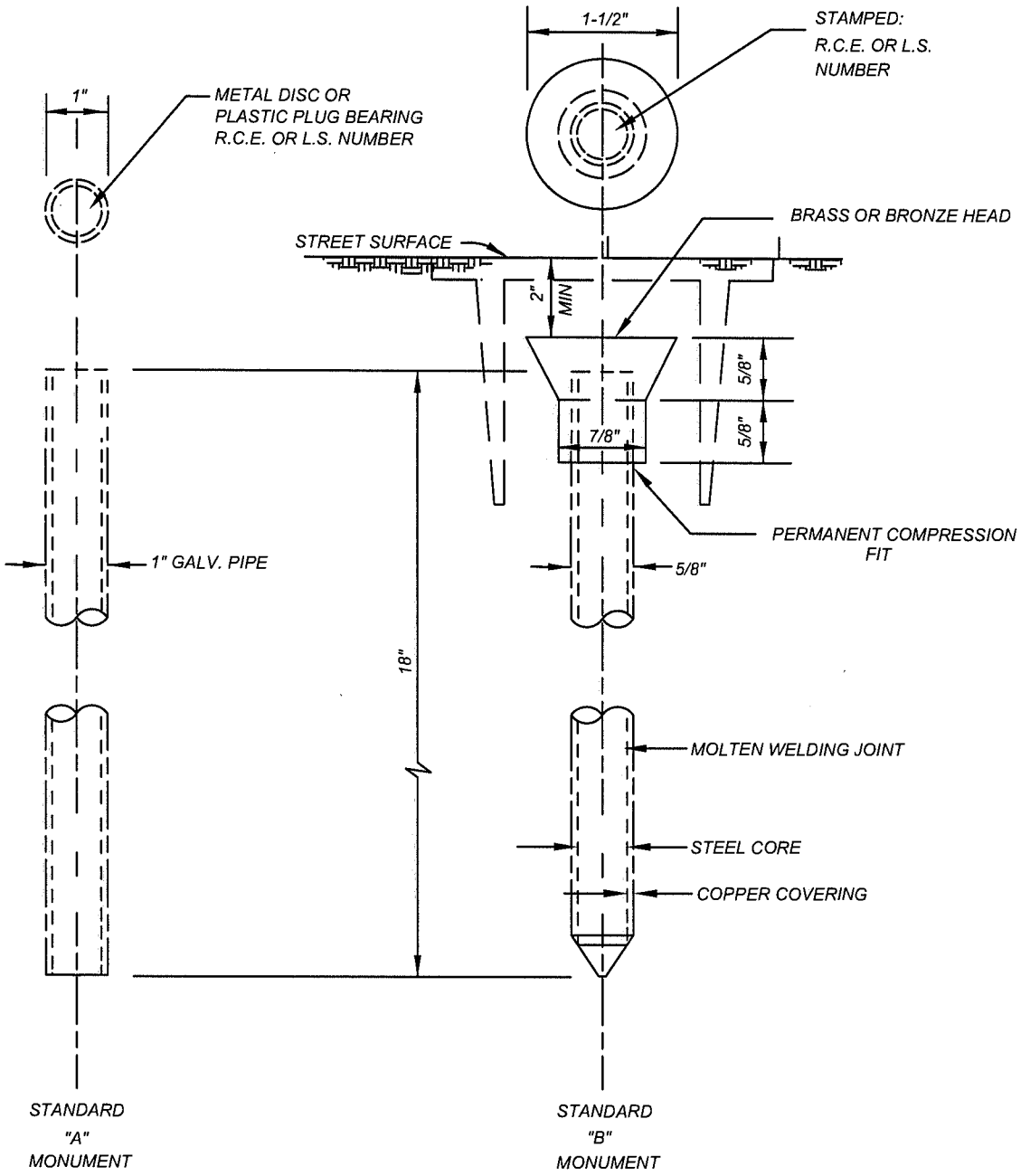

NOTES:

1.) SEE STD. NO. 601E FOR TIE-OUT/MONUMENT NOTES.
2.) MONUMENTS AT STREET INTERSECTIONS, STANDARD KNUCKLE INTERSECTION, AND CUL-DE-SAC RADIAL POINTS SHALL HAVE MONUMENT COVERS.

CAPITAL PROJECTS	DATE 01/11	CITY OF MORENO VALLEY PREPARED BY CAPITAL PROJECTS
APPROVED BY PUBLIC WORKS DIRECTOR/ CITY ENGINEER	DIVISION MANAGER INITIAL	**SURVEY MONUMENT**
		2 of 5 NO. **601B**

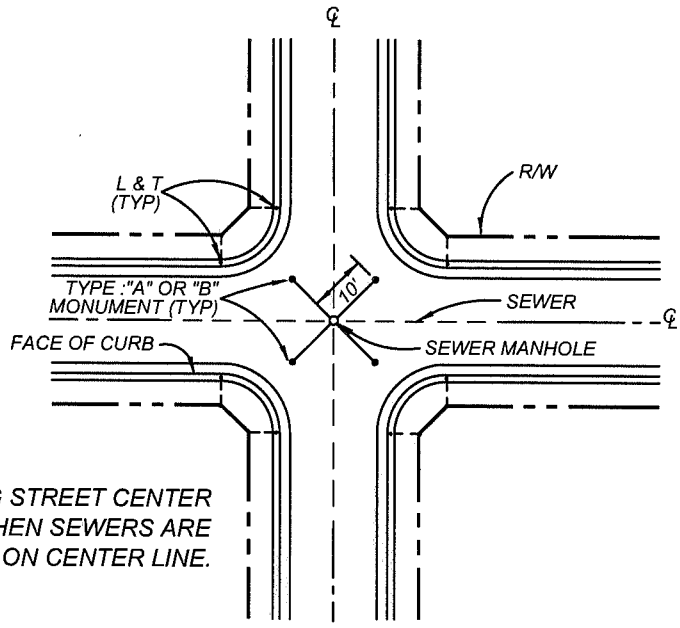

MONUMENTING STREET CENTER LINES WHEN SEWERS ARE LOCATED ON CENTER LINE.

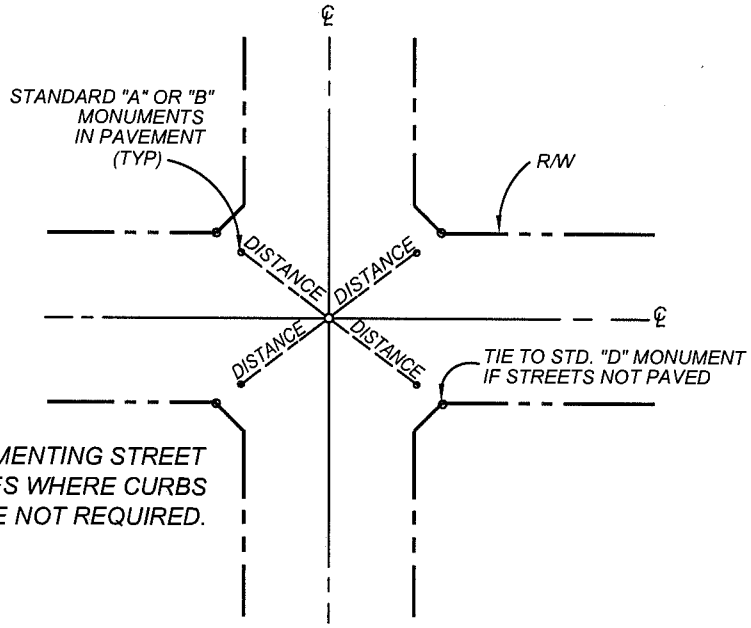

MONUMENTING STREET CENTER LINES WHERE CURBS ARE NOT REQUIRED.

NOTES:

1.) L & T AS SHOWN HEREON INDICATES LEAD AND TACK OR STEEL PIN MONUMENT SET IN CURB.
2.) LEAD AND TACK OR STEEL PIN MONUMENT WITNESS TO PROPERTY CORNER MAY BE SET, NOT REQUIRED.
3.) SEE STD. NO. 601B FOR TYPE "A" AND TYPE "B" MONUMENT.
4.) SEE STD. NO. 601E FOR TIE-OUT/MONUMENT NOTES.

CAPITAL PROJECTS	DATE 1/05	CITY OF MORENO VALLEY PREPARED BY CAPITAL PROJECTS
APPROVED BY PUBLIC WORKS DIRECTOR/ CITY ENGINEER	DIVISION MANAGER INITIAL	TIE-OUT STANDARDS
		3 of 5 NO. 601C

MONUMENTING STREET INTERSECTIONS WHERE CURB AND GUTTERS ARE INSTALLED

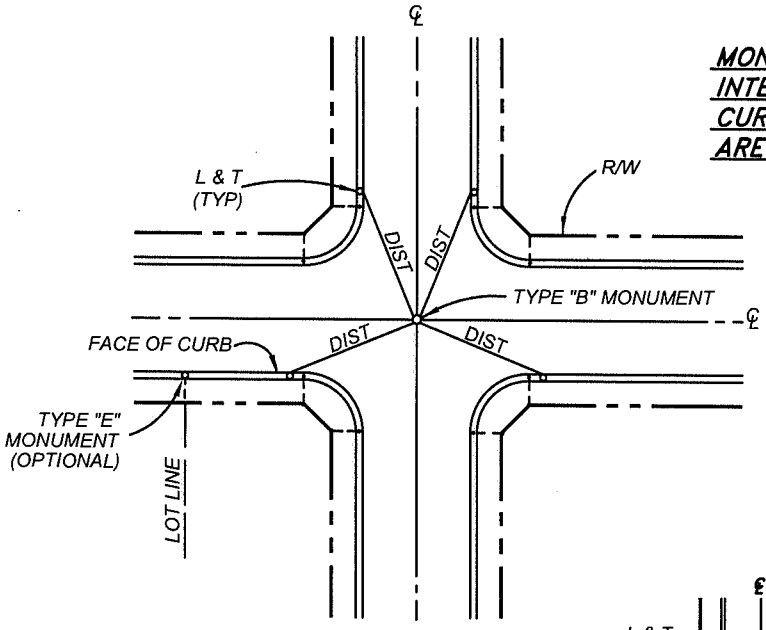

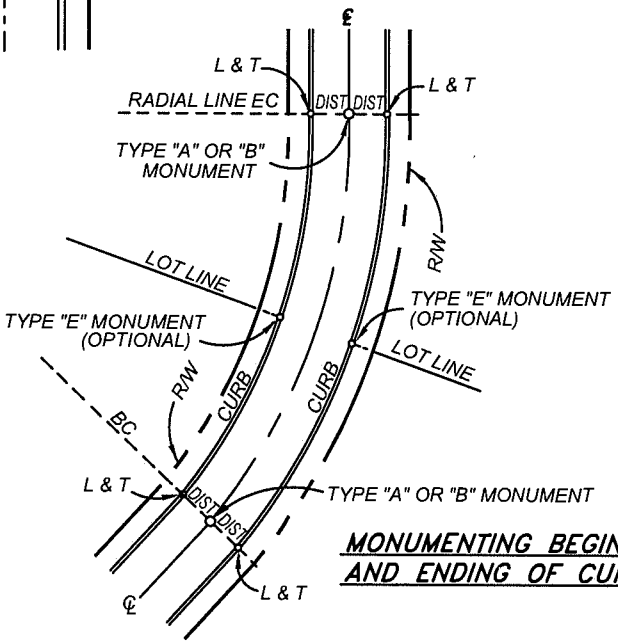

MONUMENTING BEGINNING AND ENDING OF CURVE

NOTES:

1.) L & T SHOWN HEREON INDICATES LEAD AND TACK OR STEEL PIN MONUMENT SET IN CONCRETE CURB.

2.) LEAD AND TACK OR STEEL PIN MONUMENT WITNESS TO PROPERTY CORNER MAY BE SET ("E" MONUMENT) IN LIEU OF SETTING FRONT LOT CORNERS.

3.) THE PI OF THE CURVE ℄ OF A STREET MAY BE MONUMENTED IN LIEU OF EC AND BC IF THE PI FALLS WITHIN THE TRAVELED WAY. IT SHALL BE REFERENCED WITH L&T'S IN CURB.

4.)SEE STD 601B AND 601E FOR TIE-OUT/MONUMENT NOTES.

CAPITAL PROJECTS DATE 01/11		CITY OF MORENO VALLEY PREPARED BY CAPITAL PROJECTS
APPROVED BY PUBLIC WORKS DIRECTOR/ CITY ENGINEER	DIVISION MANAGER INITIAL	STREET CENTERLINE MONUMENT
		4 of 5 NO. 601D

NOTES:

1.) **GENERAL REQUIREMENTS**: THE SUBDIVISION BOUNDARIES, LOT CORNERS, CITY LIMITS, ROAD, STREET, HIGHWAY CENTERLINE, ANGLE POINTS IN ALL LINES, BEGINNING AND END OF ALL CURVED LINES, SHALL BE MONUMENTED IN ACCORDANCE WITH THE HEREINAFTER DESCRIBED STANDARD MONUMENTS AND PROCEDURES. ANY MONUMENT HAVING CHARACTERISTICS OTHER THAN THE HEREINAFTER DESCRIBED MAY BE USED ONLY UPON WRITTEN APPROVAL OF THE CITY ENGINEER. IF AN EXISTING RECORD AND IDENTIFIED MONUMENT IS FOUND ON THE GROUND AT THE LOCATION OF A SUBDIVISION CORNER, THIS MONUMENT MAY BE USED IN LIEU OF REPLACEMENT WITH A NEW MONUMENT PROVIDED THE EXISTING MONUMENT IS A TYPE CONSIDERED TO BE DURABLE.

2.) **STANDARD "A" MONUMENTS**: THIS MONUMENT IS TO BE ONE INCH (INSIDE DIAMETER) GALVANIZED IRON PIPE EIGHTEEN (18") INCHES LONG. A METAL DISC OR PLASTIC PLUG BEARING THE REGISTERED CIVIL ENGINEER OR LAND SURVEYOR NUMBER SHALL BE SECURELY AFFIXED TO THE TOP OF THE PIPE. THE TOP SURFACE OF THE MONUMENT SHALL BE 2⅓" MINIMUM BELOW THE PAVED STREET SURFACE WITH MONUMENT COVER. SEE STANDARD PLANS NOS. 601A AND 601B.

3.) **STANDARD "B" MONUMENTS**: THIS MONUMENT IS TO BE AN EIGHTEEN (18") INCH COPPER CLAD STEEL PIN WITH ONE-HALF (1-½") INCH CONICAL BRASS CAP. THE MONUMENT MAY BE USED AS AN ALTERNATIVE TO THE TYPE "A" MONUMENT TO MARK CENTERLINE CONTROL IN PAVED STREETS. THE MONUMENT IS TO BE DRIVEN 2" MINIMUM BELOW THE STREET SURFACE WITH MONUMENT COVER. AFTER SETTING THE MONUMENT, THE REGISTERED CIVIL ENGINEER OR LAND SURVEYOR NUMBER SHALL BE STAMPED INTO THE SURFACE OF THE BRASS CAP. SEE STANDARD PLAN NOS. 601A AND 601B.

4.) **STANDARD "C" MONUMENTS**: THIS MONUMENT TO CONSIST OF A ½" REBAR, 18" LONG WITH APPROPRIATE STAMPED CAP. SEE MONUMENT SCHEDULE BELOW FOR USE OF THIS MONUMENT.

5.) **STANDARD "D" MONUMENTS**: THIS MONUMENT TO CONSIST OF A ¾" INSIDE DIAMETER x 18" LONG GALVANIZED IRON PIPE DRIVEN TO A POINT NOT TO EXCEED 1" ABOVE THE NATURAL GROUND SURFACE. THE EXACT POINT OF INTERSECTION OF THE LINES SHALL BE MARKED AS SHOWN ON STANDARD 601C, AND ON THE TOP CENTER OF THE PIPE BY A SUITABLE TACK OR NAIL, WHICH IN TURN SHALL BE USED TO SECURE TO THE STAKE THE METAL DISK BEARING THE REGISTERED CIVIL ENGINEER OR LAND SURVEYOR NUMBER OR PLASTIC PLUG WITH RCE OR LS NUMBER. SEE MONUMENT SCHEDULE BELOW FOR USE OF THIS MONUMENT.

6.) **STANDARD "E" MONUMENTS**: THIS MONUMENT TO CONSIST OF LEAD PLUG OR STEEL PIN WITH METAL IDENTIFICATION DISK SET IN CONCRETE CURB. SEE MONUMENT SCHEDULE BELOW FOR USE OF THIS MONUMENT.

7.) **MONUMENT SCHEDULE**:

STANDARD	USE OF MONUMENT	REMARKS
"A"	TRACT BOUNDARY CONTROL: STREET CENTERLINE CONTROL--UNPAVED AND PAVED	AS SPECIFIED BY THE CITY ENGINEER.
"B"	STREET CENTERLINE CONTROL	MAY BE USED IN LIEU OF TYPE "A" MONUMENT IN PAVED STREETS. TYPE "B" SHALL BE USED AT ALL STREET INTERSECTIONS
"C"	LOT CORNER ANGLE POINT IN LOT LINE, E.C. AND B.C., LOT LINE, RIGHT-OF-WAY LINE	
"D"	SAME AS "C"	
"E"	SAME AS "C"	ALL LOT CORNER MONUMENT EXCEPT WHEN LOT CORNER IS COINCIDENT WITH BOUNDARY CORNER MAY BE SET IN THE FACE OF THE CURB ON THE PROLONGATION OF THE LOT LINE. IN THE EVENT IMPROVEMENTS IN A SUBDIVISION INCLUDE A BLOCK WALL ALONG THE REAR LOT LINES, A STANDARD "E" MONUMENT MAY BE SET ON BOTH SIDES OF THE BLOCK WALL TO INDICATE DIRECTION OF THE SIDE LOT LINES. SUCH POINTS SHALL BE NOTED ON THE FINAL MAP AS "POINTS ON LINE".

8.) **MONUMENTS TIES:** UPON COMPLETION OF THE TRACT MONUMENTATION, THE ENGINEER OR LICENSED LAND SURVEYOR SHALL FURNISH TO THE CITY ENGINEER TIES TO ALL STREET CENTERLINE MONUMENTS. SUCH TIES ARE TO BE PERMANENT PHYSICAL OBJECTS, THERE BEING NOT LESS THAN 3 AND PREFERABLY 4 TIES TO EACH MONUMENT. WHENEVER CURB AND GUTTER IS INSTALLED, STREET CENTERLINE MONUMENTS ARE TO BE TIED TO PERMANENT POINTS SET IN THE CURB. THESE PERMANENT POINTS TO CONSIST OF EITHER OF THE FOLLOWING: LEAD AND TACK OR STEEL PIN DRIVEN INTO THE CONCRETE. USE OF A CROSS CUT INTO THE CONCRETE WILL NOT BE ACCEPTABLE. CROSS OVER TIES ARE PREFERRED WHEN MADE WITH TRANSIT AND TAPE. THE TIES FURNISHED TO THE CITY ENGINEER ARE TO BE PREPARED ON 8-½" x 11" SHEETS OF MYLAR. SKETCH TO BE CLEAR AND LEGIBLE AND SPACED TO AVOID CONFUSION OR MISINTERPRETATION.

CAPITAL PROJECTS	DATE 01/11	CITY OF MORENO VALLEY PREPARED BY CAPITAL PROJECTS
APPROVED BY PUBLIC WORKS DIRECTOR/ CITY ENGINEER	DIVISION MANAGER INITIAL	**MONUMENT NOTES**
		5 of 5 NO. **601E**

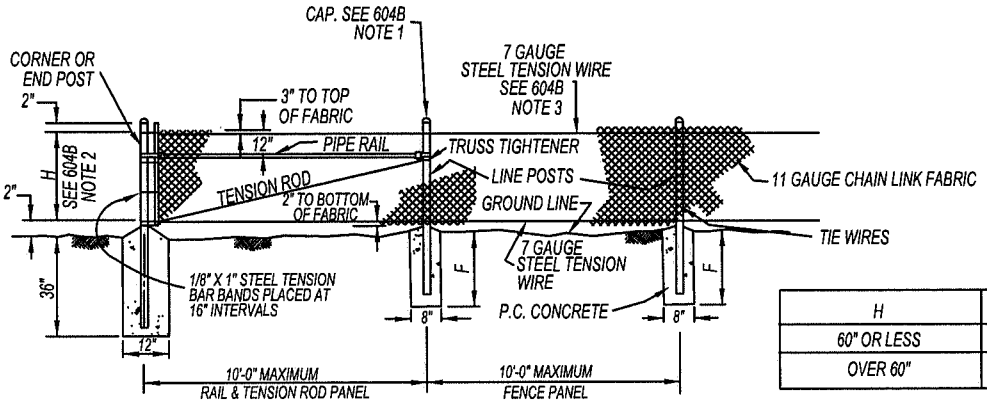

H	F
60" OR LESS	30"
OVER 60"	36"

TYPICAL FENCE ELEVATION

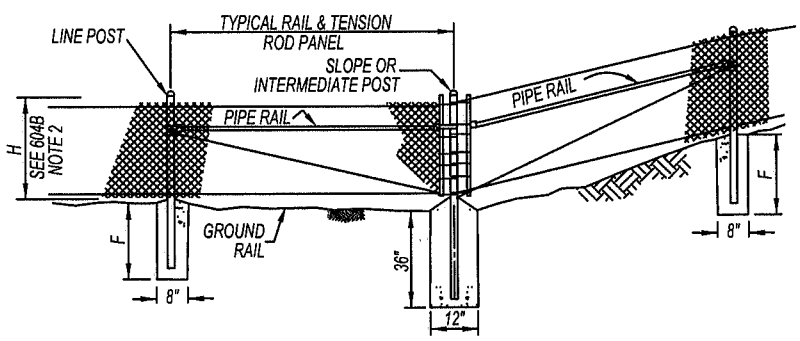

INTERMEDIATE AND SLOPE POSTS SHALL BE INSTALLED AT NOT MORE THAN 300' INTERVALS ALONG FENCE LINE AND AT GRADE CHANGES EXCEEDING 5% ALSO APPLICABLE TO CHANNEL FENCE

INTERMEDIATE POST DETAIL

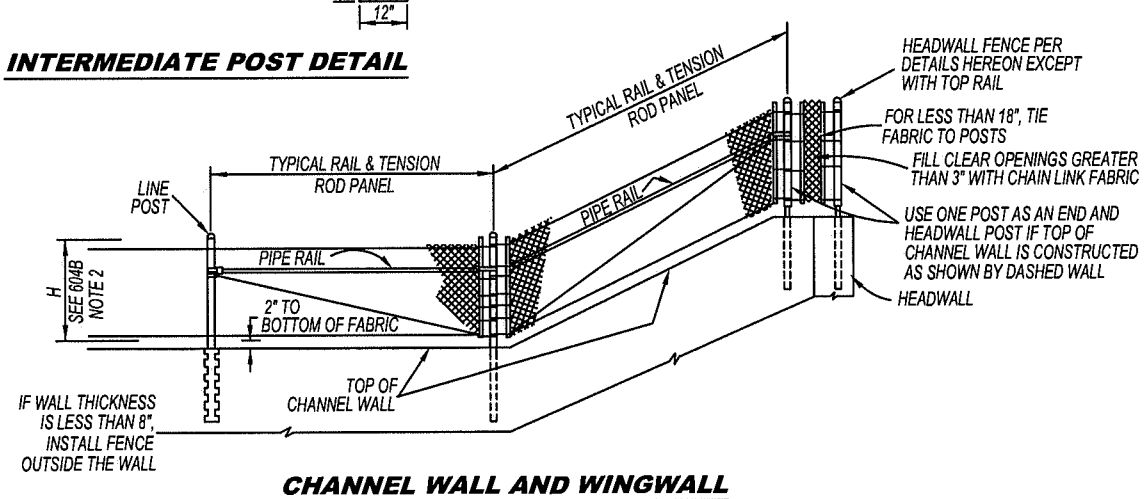

CHANNEL WALL AND WINGWALL DETAIL AT HEADWALL

CAPITAL PROJECTS	DATE 1/08	CITY OF MORENO VALLEY
APPROVED BY	DIVISION MANAGER INITIAL	PREPARED BY CAPITAL PROJECTS
PUBLIC WORKS DIRECTOR/ CITY ENGINEER		**FENCE AND GATES FOR WALL AND CHANNEL** — 1 of 3 — NO. **604A**

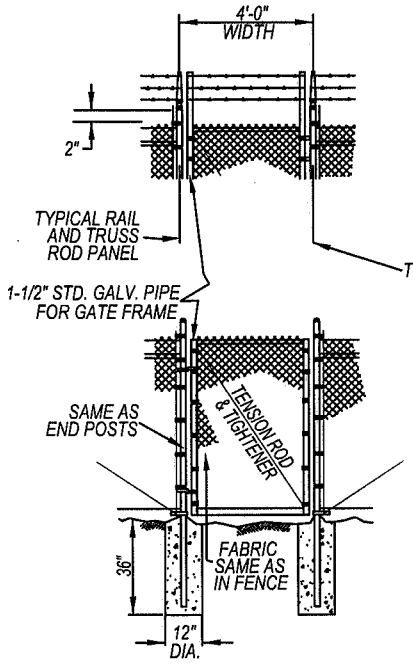

TYPICAL WALK GATE

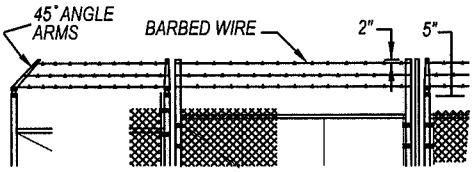

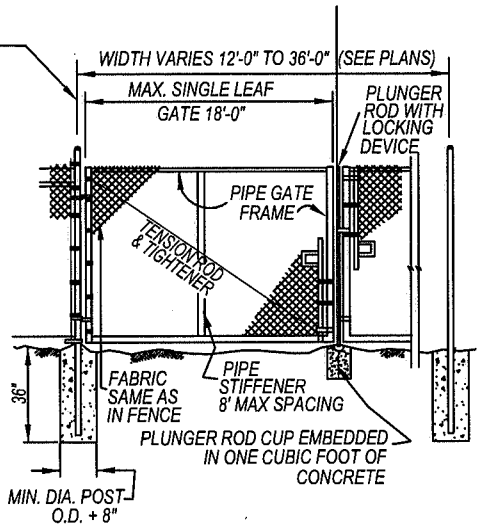

TYPICAL DRIVE GATE

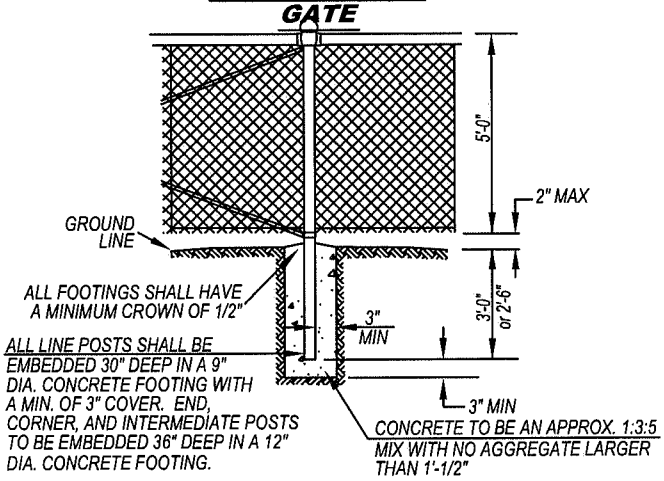

TYPICAL FENCE POST FOOTING EMBEDMENT DETAIL

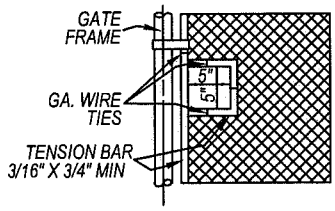

DETAIL OF CUT-OUT FOR CHAIN AND LOCK

NOTES:

1.) SECURE DRIVE FIT GALVANIZED CAP TO POST WITH ¼" ROUND HEAD RIVET.
2.) H DENOTES FABRIC WIDTH AND NORMAL FENCE HEIGHT. H SHALL BE 5'-0" UNLESS OTHERWISE SPECIFIED.
3.) IF CHAIN LINK FENCE WITH TOP RAIL IS SPECIFIED. DELETE STEEL TENSION WIRE AT THE TOP AND THE PIPE RAILS AT THE INTERMEDIATE, END AND CORNER POSTS. EXTEND TENSION ROD TO THE TOP RAIL.
4.) BARBED WIRE SHALL BE USED ONLY WHEN SPECIFIED.
5.) ALL DATA SHOWN ON TYPICAL DETAILS SHALL BE APPLICABLE TO OTHER PERTINENT DETAILS.
6.) THE GALVANIZING OF THE FENCE FABRIC SHALL PRODUCE A ZINC COATING WEIGHING NOT LESS THAN 1.2 OZ. PER SQ. FT..

CAPITAL PROJECTS	DATE 1/08	CITY OF MORENO VALLEY PREPARED BY CAPITAL PROJECTS	
APPROVED BY PUBLIC WORKS DIRECTOR/ CITY ENGINEER	DIVISION MANAGER INITIAL	**HIGHWAY CHAIN LINK FENCE AND GATES**	2 of 3 NO. **604B**

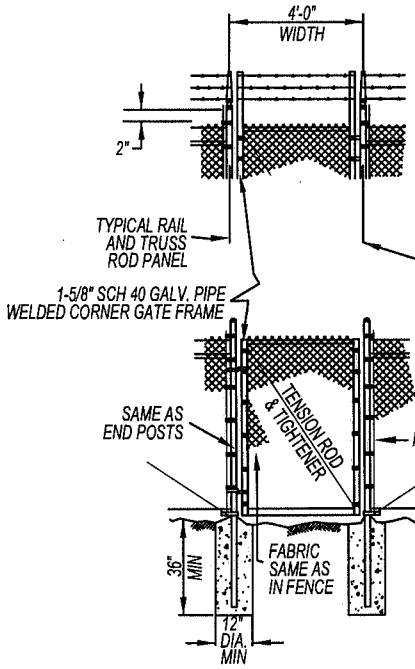

TYPICAL WALK GATE

BARB WIRE (AS REQ'D)

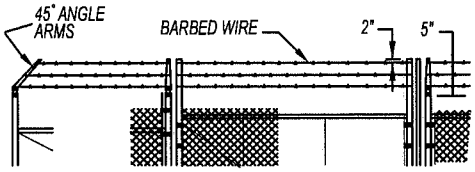

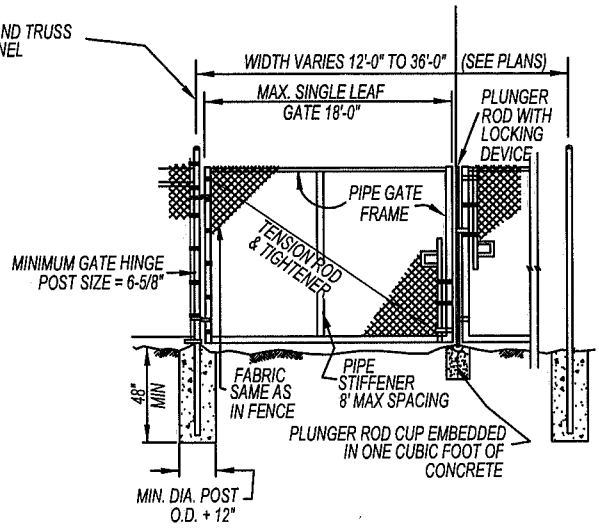

TYPICAL DRIVE GATE

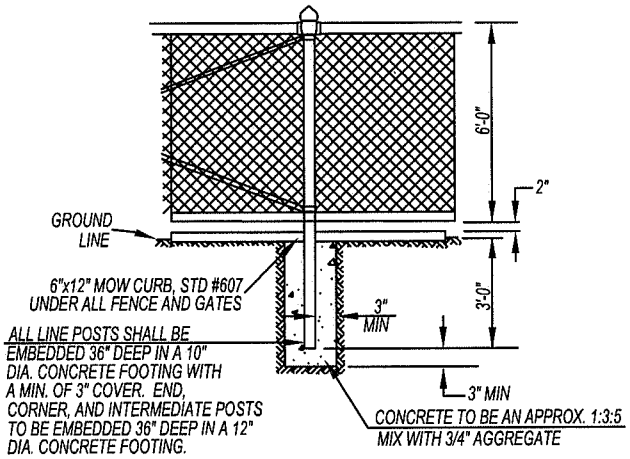

TYPICAL FENCE POST FOOTING EMBEDMENT DETAIL

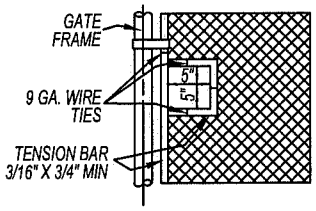

DETAIL OF CUT-OUT FOR CHAIN AND LOCK

NOTES:

1.) SECURE DRIVE FIT GALVANIZED CAP TO POST WITH ¼" ROUND HEAD RIVET.
2.) TYPICAL HEIGHT IS 6'-0" UNLESS OTHERWISE SPECIFIED. MID RAILS ARE REQUIRED ON FENCE OVER 6'.
3.) 6' CHAIN LINK FENCE TO HAVE TOP AND BOTTOM RAIL. RAILS AT INTERMEDIATE, END, AND ANY CHANGE OF DIRECTION.
4.) TYPICAL FABRIC IS 2", 9 GA. GAW, WITH KNUCKLED (KK) SELVAGED ENDS. 3 GA. COLOR VINYL OVER FABRIC AS SPECIFIED.
5.) ALL DATA SHOWN ON TYPICAL DETAILS SHALL BE APPLICABLE TO OTHER PERTINENT DETAILS AND PARK SPECIFICATIONS.
6.) THE GALVANIZING OF THE FENCE FABRIC SHALL PRODUCE A ZINC COATING WEIGHING NOT LESS THAN 1.2 OZ. PER SQ. FT.
7.) POSTS AND RAILS TO BE SCH 40 OR SS 40 (UNLESS OTHERWISE SPECIFIED).
8.) VINYL COATED FENCING REQUIRES VINYL COATED POSTS AND FITTINGS OVER GALVANIZED COATING
9.) MINIMUM LINE POST SIZE IS 2-3/8". MINIMUM TERMINAL POST SIZE IS 2-7/8".

PARKS AND COMMUNITY SERVICES DATE 1/08	CITY OF MORENO VALLEY PREPARED BY CAPITAL PROJECTS	
APPROVED BY PUBLIC WORKS DIRECTOR/ CITY ENGINEER	DIVISION MANAGER INITIAL	PARK PROJECTS CHAIN LINK FENCE AND GATES	3 of 3 NO. 604C

APPENDIX D

CALTRANS STANDARD PLANS

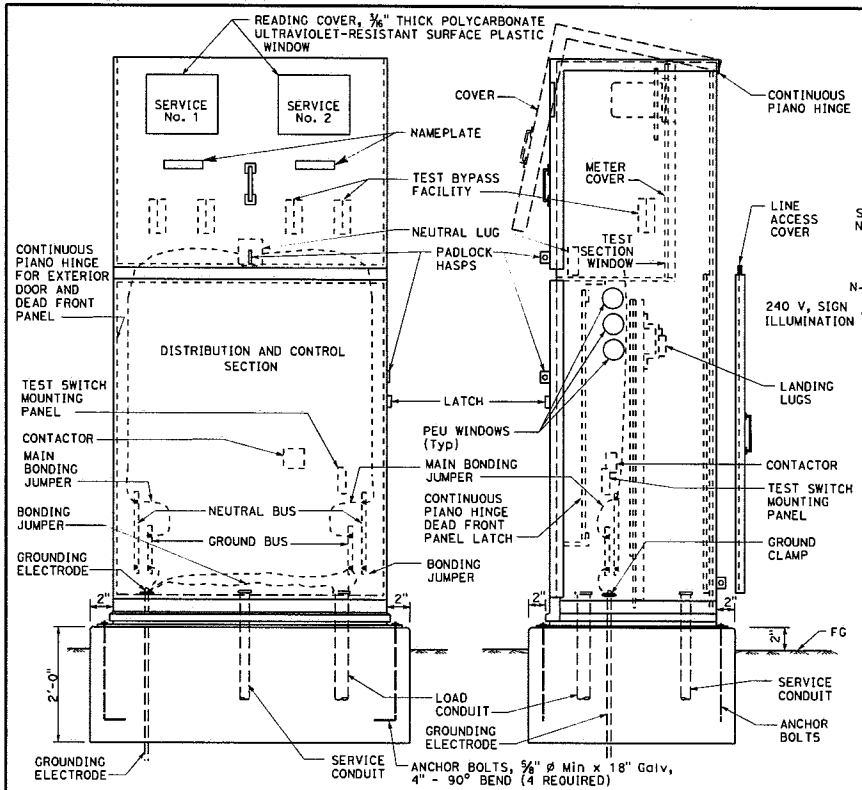

FRONT VIEW SIDE VIEW

TYPE III-CF SERVICE EQUIPMENT ENCLOSURE (TYPICAL)

DETAIL A

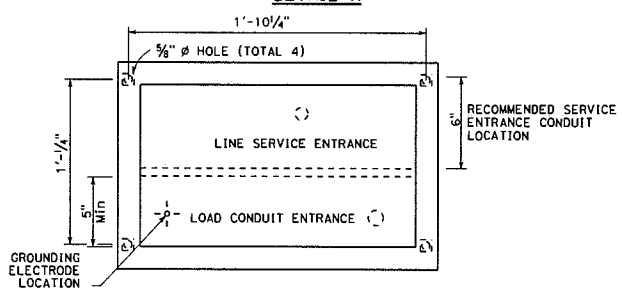

BASE FOR TYPE III-C SERVICE EQUIPMENT ENCLOSURE

DETAIL B

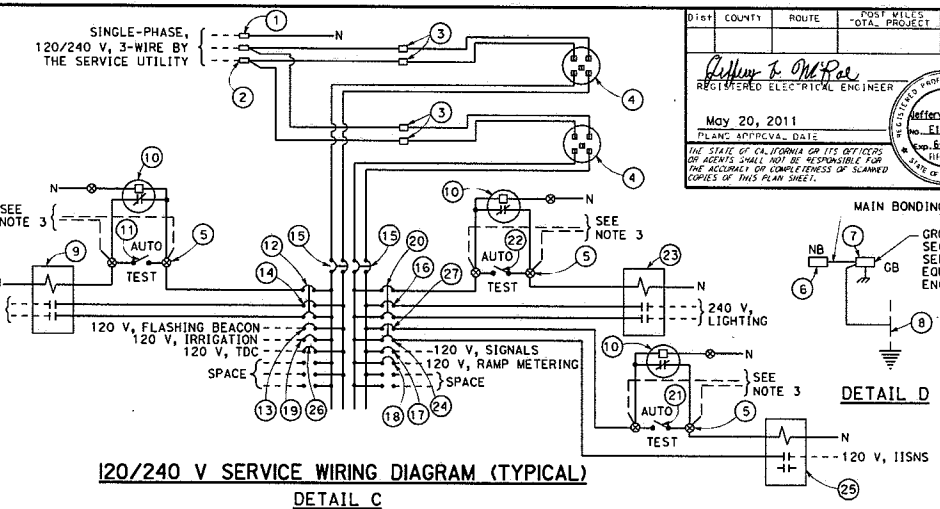

120/240 V SERVICE WIRING DIAGRAM (TYPICAL)

DETAIL C

DETAIL D

Dist	COUNTY	ROUTE	POST MILES TOTAL PROJECT	SHEET NO.	TOTAL SHEETS

REGISTERED ELECTRICAL ENGINEER

May 20, 2011
PLANS APPROVAL DATE

Jeffery G. McRae No. E14512 Exp. 6-30-12 ELECTRICAL STATE OF CALIFORNIA REGISTERED PROFESSIONAL ENGINEER

THE STATE OF CALIFORNIA OR ITS OFFICERS OR AGENTS SHALL NOT BE RESPONSIBLE FOR THE ACCURACY OR COMPLETENESS OF SCANNED COPIES OF THIS PLAN SHEET.

TYPE III-C SERVICE EQUIPMENT ENCLOSURE LEGEND (120/240 V)

ITEM	COMPONENT	NAMEPLATE DESCRIPTION	ITEM	COMPONENT	NAMEPLATE DESCRIPTION
1	NEUTRAL LUG		14	30 A, 240 V, 2P, CB	SIGN ILLUMINATION
2	LANDING LUG (NOTE 6)		15	100 A, 240 V, 2P, CB	MAIN BREAKER
3	TEST BYPASS FACILITY		16	30 A, 240 V, 2P, CB	LIGHTING
4	METER SOCKET AND SUPPORT		17	50 A, 120 V, 1P, CB	SIGNALS
5	TERMINAL BLOCKS		18	30 A, 120 V, 1P, CB	RAMP METERING
6	NEUTRAL BUS		19	20 A, 120 V, 1P, CB	IRRIGATION
7	GROUND BUS		20	15 A, 120 V, 1P, CB	LIGHTING CONTROL
8	GROUNDING ELECTRODE		21	15 A, 1P, TEST SWITCH	IISNS TEST SWITCH
9	30 A, 2P, NO CONTACTOR	SIGN ILLUMINATION	22	15 A, 1P, TEST SWITCH	LIGHTING TEST SWITCH
10	PHOTOELECTRIC UNIT (NOTE 7)	PEU	23	60 A, 2P, NO CONTACTOR	LIGHTING
11	15 A, 1P, TEST SWITCH	SIGN ILLUMINATION TEST SWITCH	24	15 A, 120 V, 1P, CB	IISNS
12	15 A, 120 V, 1P, CB	SIGN ILLUMINATION CONTROL	25	30 A, 2P, NO CONTACTOR	IISNS
13	15 A, 120 V, 1P, CB	FLASHING BEACON	26	20 A, 120 V, 1P, CB	TELEPHONE DEMARCATION CABINET
			27	15 A, 120 V, 1P, CB	IISNS CONTROL

NOTES:

1. Voltage ratings of service equipment shall conform to the service voltages indicated on the plans.
2. Unless otherwise indicated on the plans, service equipment items shall be provided for each service equipment enclosure as shown.
3. Connect to remote test switch mounted on lighting standards, sign post or structure when required.
4. Items 1 and 6 shall be isolated from the service equipment enclosure.
5. Meter sockets shall be 5 clip type.
6. The landing lug shall be suitable for multiple conductors.
7. Type V photoelectric control shall be used unless otherwise indicated on the plans.
8. Item 12, 20 and 27 shall be ganged operated CB.

STATE OF CALIFORNIA
DEPARTMENT OF TRANSPORTATION

ELECTRICAL SYSTEMS (SERVICE EQUIPMENT ENCLOSURE AND TYPICAL WIRING DIAGRAM TYPE III-C SERIES)

NO SCALE

ES-2F

2010 STANDARD PLAN ES-2F

Dist	COUNTY	ROUTE	POST MILES TOTAL PROJECT	SHEET NO.	TOTAL SHEETS

REGISTERED CIVIL ENGINEER

May 20, 2011
PLANS APPROVAL DATE

"THE STATE OF CALIFORNIA OR ITS OFFICERS OR AGENTS SHALL NOT BE RESPONSIBLE FOR THE ACCURACY OR COMPLETENESS OF SCANNED COPIES OF THIS PLAN SHEET."

REGISTERED PROFESSIONAL ENGINEER Stanley P. Johnson No. C57793 Exp. 3-31-12 CIVIL STATE OF CALIFORNIA

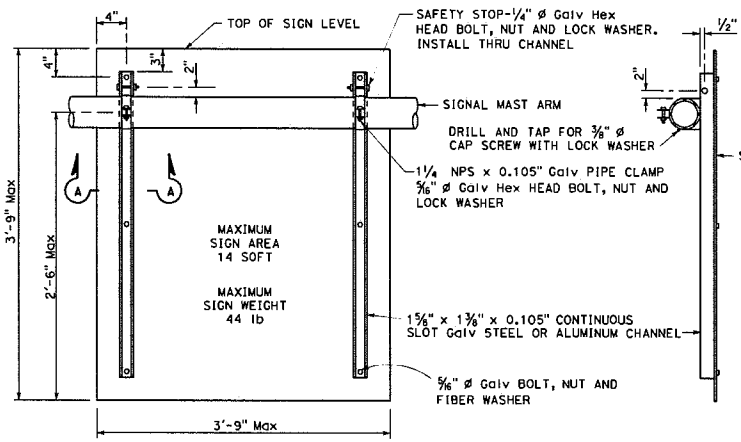

REAR VIEW

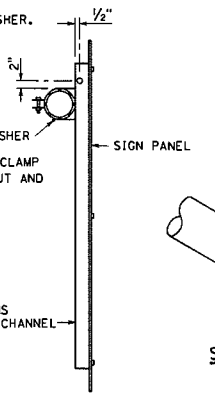

SIDE VIEW

SIGN MOUNTING DETAILS
DETAIL U

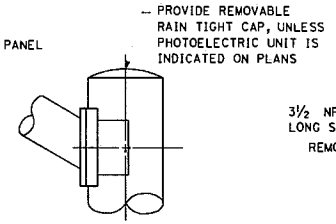

STANDARD TOP
DETAIL B-1

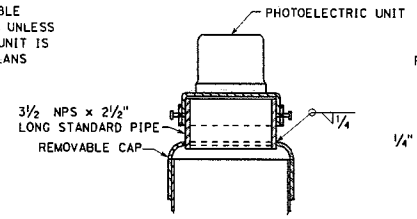

MOUNTING ADAPTER FOR PHOTOELECTRIC UNIT
DETAIL B-2

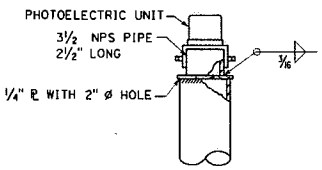

ALTERNATIVE MOUNTING ADAPTER
DETAIL B-3

POLE TOP DETAILS
DETAIL B

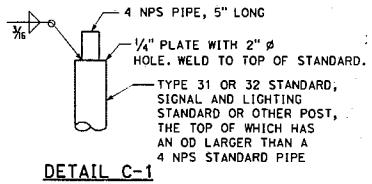

DETAIL C-1

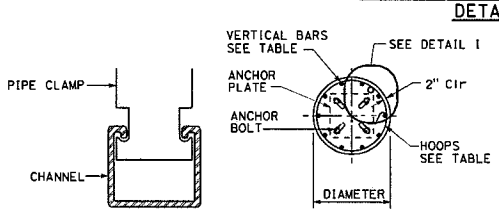

SECTION A-A

SECTION B-B

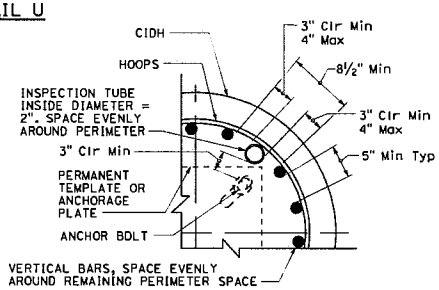

INSPECTION TUBE PLACEMENT
DETAIL I

CIDH REINFORCING AND INSPECTION TUBE SCHEDULE			
CIDH DIAMETER	VERTICAL BARS	HOOPS (WELDED)	INSPECTION TUBE
2 ft	8-#5	#4 AT 6	2
2.5 ft	10-#6		4*
3 ft	12-#7	#5 AT 6	
3.5 ft	14-#8		4
4 ft	18-#9	2-#4 AT 7	5
5 ft	22-#10	2-#5 AT 7	6
6 ft	26-#11	2-#6 AT 7	7

* FOR SLIP BASE VERSIONS WITH 3 ANCHOR BOLTS USE 3 INSPECTION TUBES.

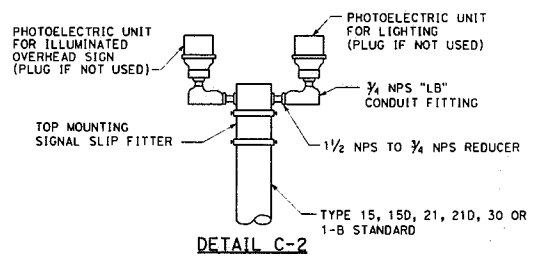

DETAIL C-2

DUAL PHOTOELECTRIC UNIT MOUNTING DETAIL
DETAIL C

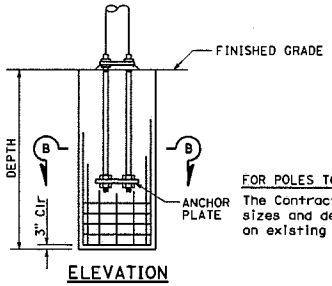

ELEVATION

CAST-IN-DRILLED HOLE PILE FOUNDATION, REINFORCED PILE
DETAIL A

FOR POLES TO BE INSTALLED ON EXISTING FOUNDATION:
The Contractor shall verify bolt circles, anchor bolt sizes and dependent dimensions for poles to be installed on existing foundations before fabricating the poles.

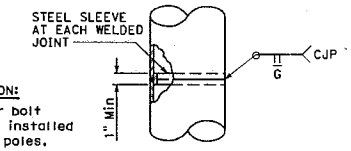

FOR UNIFORM TUBE THICKNESS
DETAIL T-1

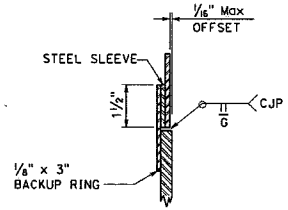

AT TUBE THICKNESS CHANGE
DETAIL T-2

POLE SPLICES
DETAIL T

STATE OF CALIFORNIA
DEPARTMENT OF TRANSPORTATION

ELECTRICAL SYSTEMS (SIGNAL AND LIGHTING STANDARD, DETAIL No. 2)

NO SCALE

ES-7N

2010 STANDARD PLAN ES-7N

Dist	COUNTY	ROUTE	POST MILES TOTAL PROJECT	SHEET No.	TOTAL SHEETS

REGISTERED CIVIL ENGINEER

May 20, 2011

PLANS APPROVAL DATE

REGISTERED PROFESSIONAL ENGINEER Stanley P. Johnson No. C57793 Exp. 3-31-12 CIVIL STATE OF CALIFORNIA

"THE STATE OF CALIFORNIA OR ITS OFFICERS OR AGENTS SHALL NOT BE RESPONSIBLE FOR THE ACCURACY OR COMPLETENESS OF SCANNED COPIES OF THIS PLAN SHEET."

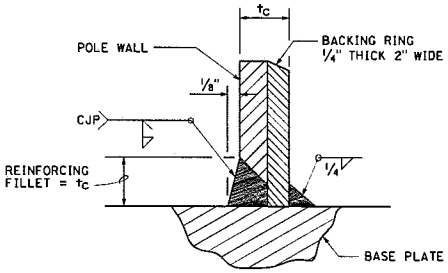

DETAIL B

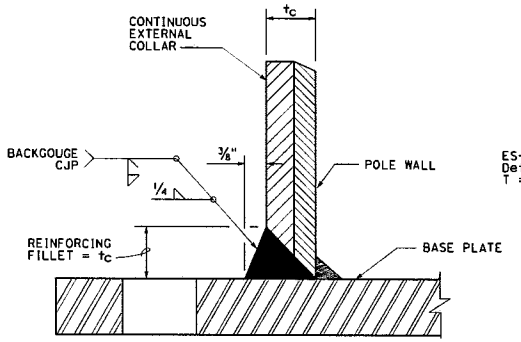

DETAIL C1

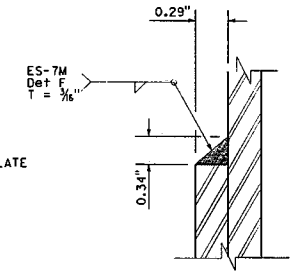

DETAIL C2

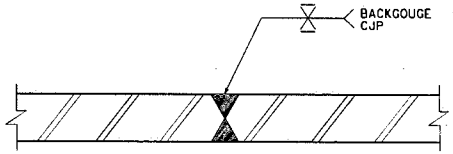

DETAIL C3

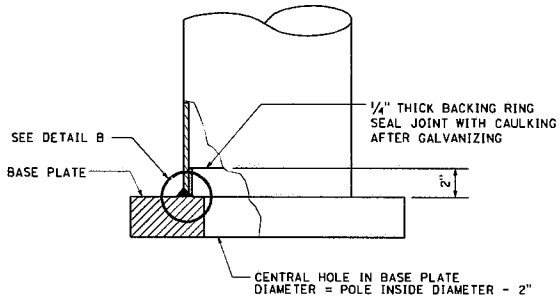

ELEVATION B

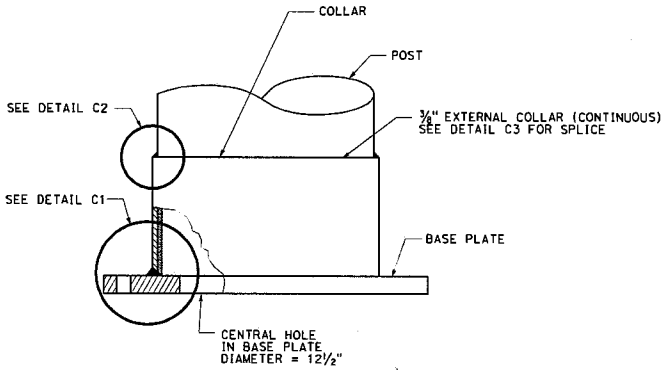

ELEVATION C

For alternative base, see Detail C4

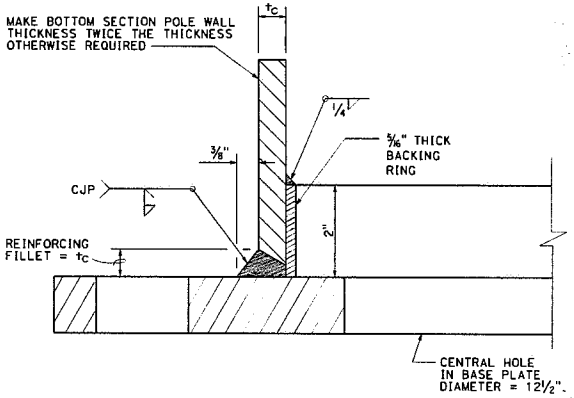

DETAIL C4

STATE OF CALIFORNIA
DEPARTMENT OF TRANSPORTATION

ELECTRICAL SYSTEMS (SIGNAL AND LIGHTING STANDARD, DETAIL No. 3)

NO SCALE

ES-70

2010 STANDARD PLAN ES-70

Dist	COUNTY	ROUTE	POST MILES TOTAL PROJECT	SHEET No.	TOTAL SHEETS

REGISTERED ELECTRICAL ENGINEER

May 20, 2011
PLANS APPROVAL DATE

REGISTERED PROFESSIONAL ENGINEER Jeffery G. McRae No. E14512 Exp. 6-30-12 ELECTRICAL STATE OF CALIFORNIA

THE STATE OF CALIFORNIA OR ITS OFFICERS OR AGENTS SHALL NOT BE RESPONSIBLE FOR THE ACCURACY OR COMPLETENESS OF SCANNED COPIES OF THIS PLAN SHEET.

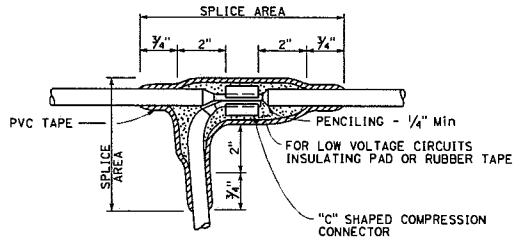

TYPE C SPLICE

See Note 3

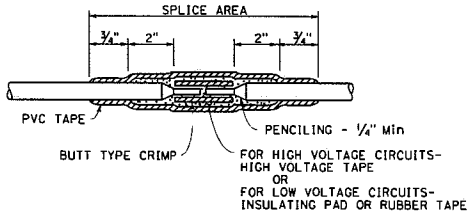

TYPE S SPLICE

See Note 4

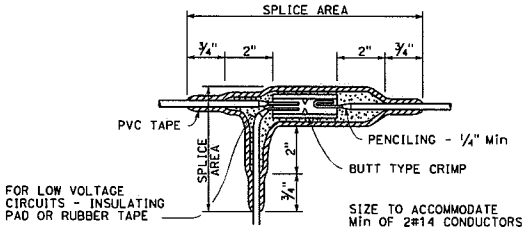

TYPE ST SPLICE

See Note 5

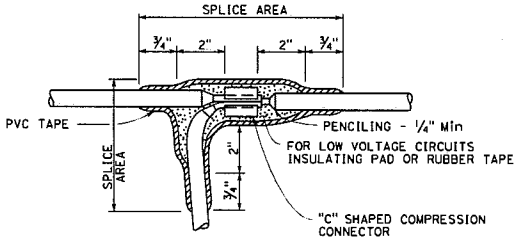

TYPE T SPLICE

See Note 5

NOTES:

1. Dimensions are minimum.
2. Rubber tapes shall be rolled after application.
3. Between 1 free-end and 1 through conductor.
4. Between 2 free-end conductors.
5. Between 3 free-end conductors.

STATE OF CALIFORNIA
DEPARTMENT OF TRANSPORTATION

ELECTRICAL SYSTEMS (SPLICING DETAILS)

NO SCALE

ES-13A

2010 STANDARD PLAN ES-13A

APPENDIX E

OTHER AGENCY STANDARD PLANS

APPENDIX E1

STANDARD PLANS FOR PUBLIC WORKS CONSTRUCTION (SPPWC/APWA)

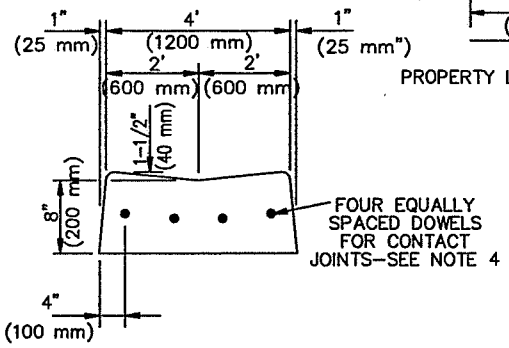

LONGITUDINAL GUTTER

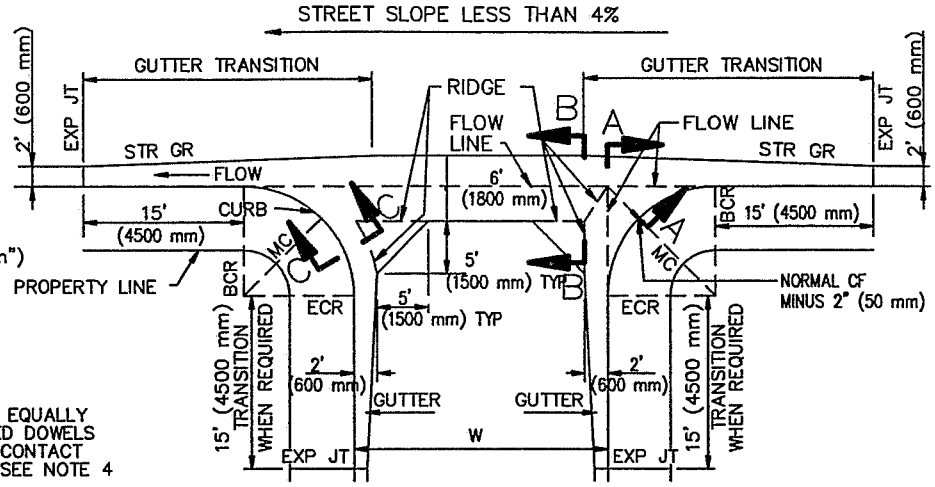

TYPICAL CROSS GUTTER PLAN
STREET SLOPE LESS THAN 4%

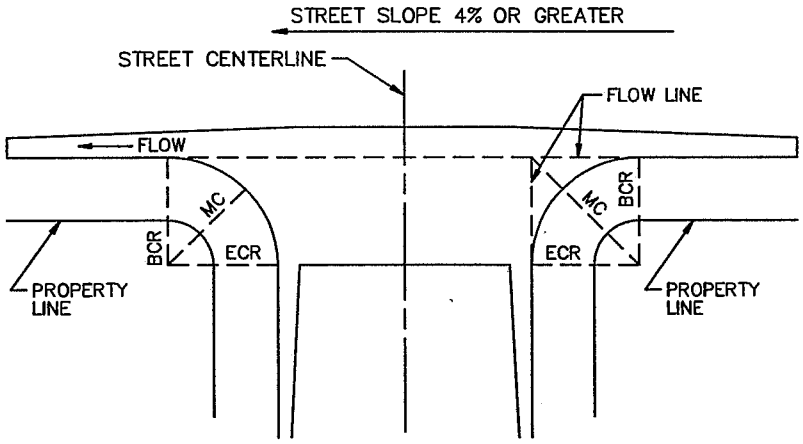

TYPICAL CROSS GUTTER PLAN
STREET SLOPE MORE THAN 4%

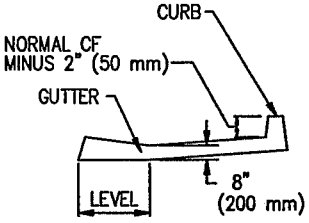

SECTION A–A

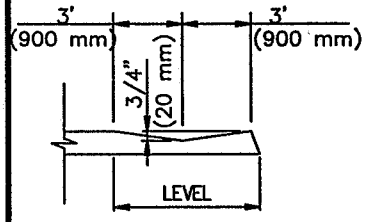

SECTION B–B

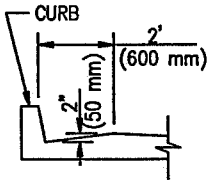

SECTION C–C

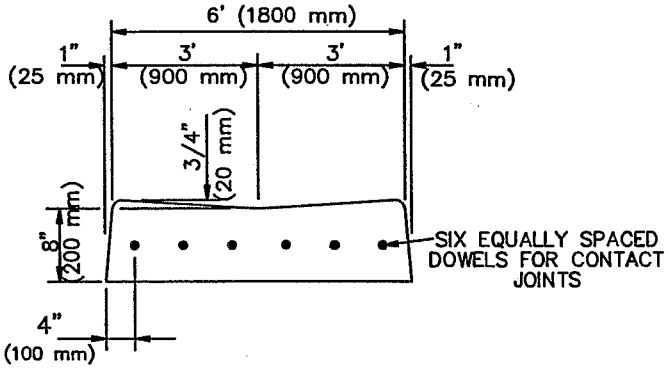

SECTION D–D

STANDARD PLANS FOR PUBLIC WORKS CONSTRUCTION

PROMULGATED BY THE PUBLIC WORKS STANDARDS INC. GREENBOOK COMMITTEE 1984 REV. 1996, 2009

CROSS AND LONGITUDINAL GUTTERS

USE WITH STANDARD SPECIFICATIONS FOR PUBLIC WORKS CONSTRUCTION

STANDARD PLAN 122–2

SHEET 1 OF 2

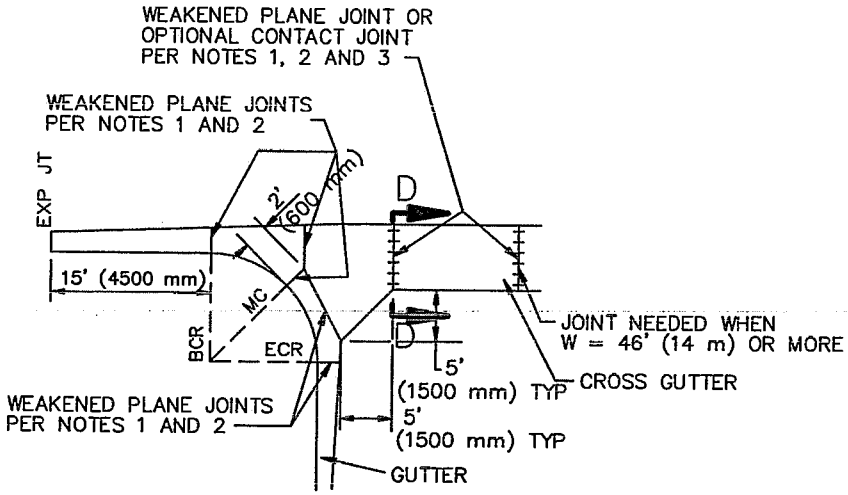

TYPICAL JOINT PLAN

NOTES:

1. WEAKENED PLANE AND/OR CONTACT JOINTS SHALL BE PLACED IN CURB AND GUTTER AT LOCATIONS SHOWN ON THE TYPICAL JOINT PLAN HEREON.
2. WEAKENED PLANE JOINTS SHALL BE PLASTIC CONTROL JOINTS OR 1-1/2" (40 mm) DEEP SAW CUTS. CONCRETE SAWING SHALL TAKE PLACE WITHIN 24 HOURS AFTER CONCRETE IS PLACED.
3. DOWELS FOR CONTACT JOINTS SHALL BE #4 BARS 18" LONG (#13M BARS 450 mm LONG).
4. PLACE A WEAKENED PLANE OR CONTACT JOINT WHERE LONGITUDINAL ALLEY GUTTER JOINS CONCRETE ALLEY INTERSECTION.
5. ALL EXPOSED CORNERS ON PCC GUTTERS SHALL BE ROUNDED WITH 1/2" (15 mm) RADIUS.
6. CONCRETE SHALL BE INTEGRAL WITH CURB UNLESS OTHERWISE SPECIFIED.

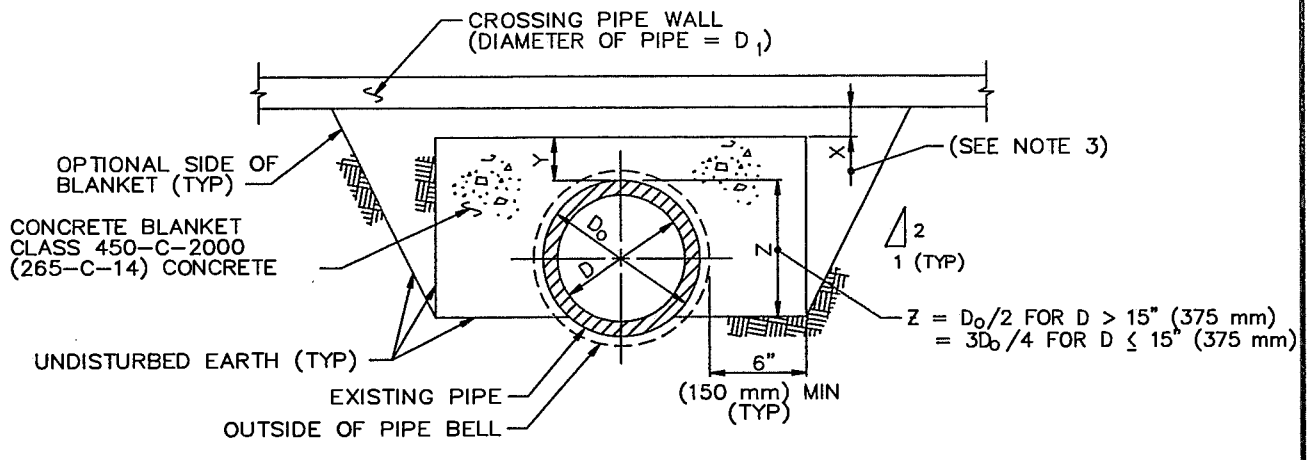

CONCRETE BLANKET
(FOR EXISTING PIPES CROSSED OVER BY A NEW PIPE)

NOTES:

1. CONCRETE BLANKET IS REQUIRED WHEN THE CLEARANCE BETWEEN THE TOP OF THE EXISTING PIPE AND THE BOTTOM OF THE CROSSING PIPE IS LESS THAN 18" (450 mm).
2. Y = D/6 (6" (150 mm) MIN). WHERE THE CLEARANCE BETWEEN THE TOP OF THE EXISTING PIPE AND THE BOTTOM OF THE CROSSING PIPE IS LESS THAN Y, THE CONCRETE SHALL BE PLACED BETWEEN THE PIPES AND AROUND THE SIDES OF THE CROSSING PIPE UP TO A LEVEL EQUAL TO Y ABOVE THE EXISTING PIPE, OR AS REQUIRED BY NOTE 3 BELOW, WHICHEVER IS HIGHER.
3. X = D/12, MINIMUM, TO PROVIDE BEDDING MATERIAL FOR THE CROSSING CONDUIT. WHEN X IS LESS THAN THIS MINIMUM, THE ENTIRE TOP SURFACE OF THE BLANKET SHALL BE RAISED TO MAKE CONTACT WITH THE LOWER 90° OF THE CROSSING PIPE.
4. THE BLANKET SHALL EXTEND LONGITUDINALLY TO THE FIRST JOINT BEYOND THE TRENCH EXCAVATION AT EACH END OF THE BLANKET, EXCEPT THAT THE BLANKET NEED NOT BE EXTENDED MORE THAN 4' (1.2m) BEYOND THE TRENCH.
5. WHENEVER A PIPE BELL IS ENCOUNTERED WITHIN THE LIMITS OF THE BLANKET, ALL DIMENSIONS SHALL REFER TO THE BELL.

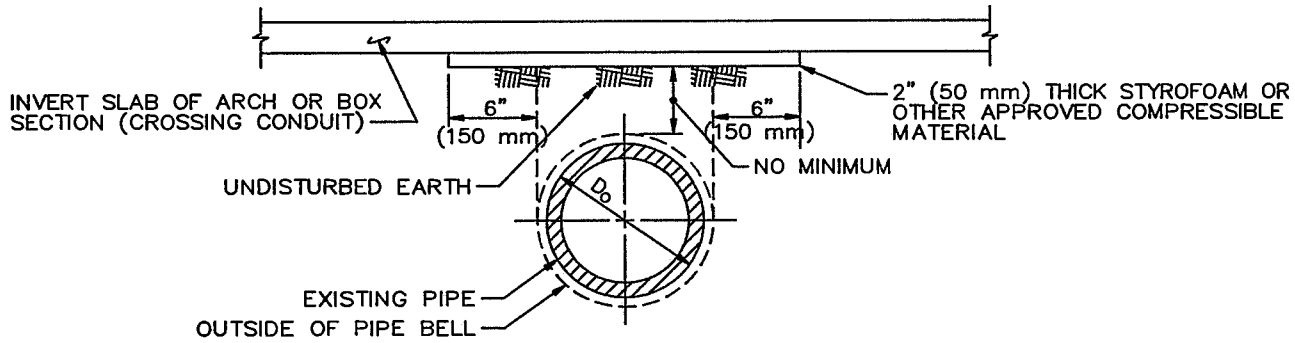

COMPRESSIBLE BLANKET
(FOR EXISTING PIPES CROSSED OVER BY A NEW BOX OR ARCH)

NOTES:

1. COMPRESSIBLE BLANKET IS REQUIRED WHEN THE CLEARANCE BETWEEN THE TOP OF THE EXISTING PIPE AND THE BOTTOM OF THE CROSSING CONDUIT (BOX OR ARCH) IS LESS THAN 18" (450 mm).
2. THE BLANKET SHALL EXTEND LONGITUDINALLY FOR THE FULL CROSSING CONDUIT TRENCH WIDTH.

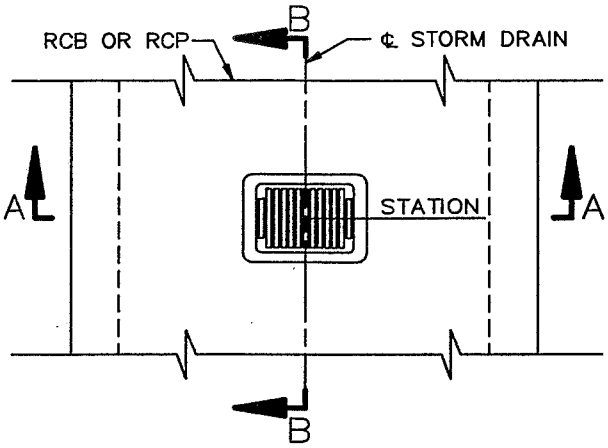

PLAN

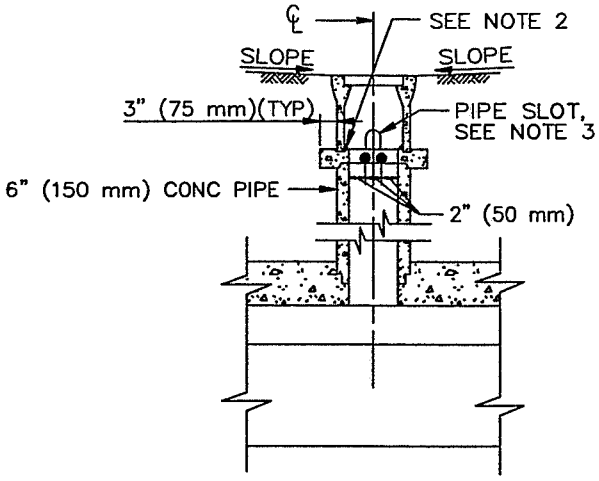

SECTION B – B

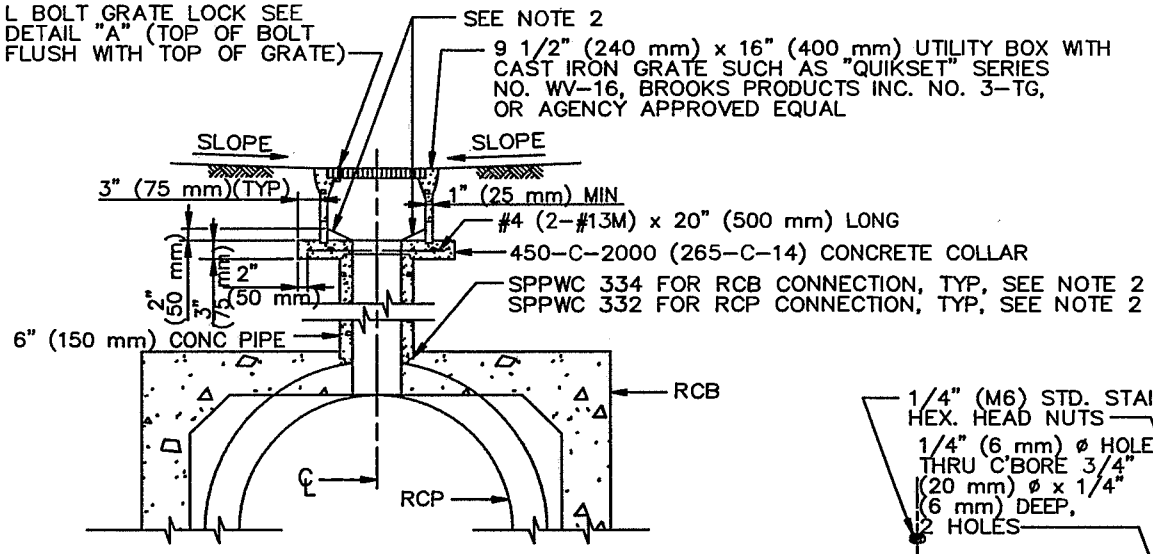

SECTION A – A

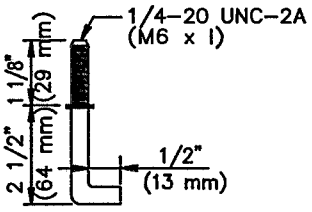

DETAIL OF L BOLT

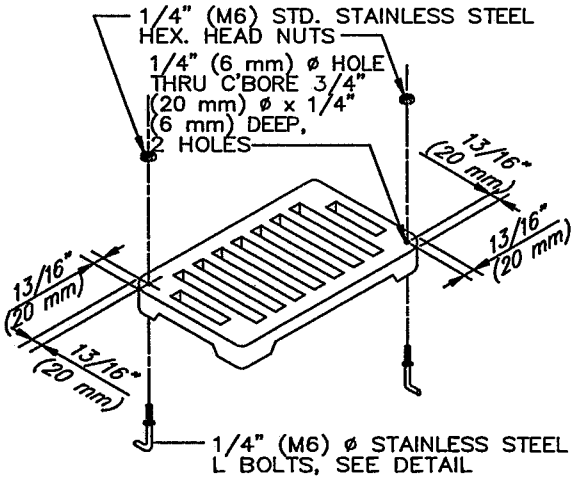

DETAIL "A"

STANDARD PLANS FOR PUBLIC WORKS CONSTRUCTION

PROMULGATED BY THE PUBLIC WORKS STANDARDS INC. GREENBOOK COMMITTEE 1984 REV. 1996, 2009

YARD INLET

USE WITH STANDARD SPECIFICATIONS FOR PUBLIC WORKS CONSTRUCTION

STANDARD PLAN

350-2

SHEET 1 OF 2

NOTES

1. CONNECTOR PIPE

   LOCATE PIPE AS INDICATED ON SHEET 1.

2. CONCRETE

   FLOOR OF BASIN SHALL SLOPE FROM ALL WALLS TO THE OUTLET AND SHALL BE GIVEN A STEEL TROWELED SURFACE FINISH.

   3" (75 mm) THICK CONCRETE ENCASEMENT SHALL BE USED IN LIEU OF 6" (150 mm) THICK CONCRETE ENCASEMENT WHEN REQUIRED BY SPPWC 332 OR 334.

3. GENERAL

   GRATING AND BASIN ARE NOT DESIGNED FOR VEHICULAR TRAFFIC AND SHALL NOT BE USED IN LOCATIONS WHERE SUCH TRAFFIC WILL OCCUR.

   EMBED UTILITY BOX 1/2" (15 mm) INTO CONCRETE COLLAR. SEAL PIPE SLOTS IN UTILITY BOX WALLS WITH CONCRETE.

4. THE FOLLOWING SPPWC ARE INCORPORATED HEREIN:

   332 JUNCTION STRUCTURE PIPE TO PIPE (INLET I.D. ≤ 24" (600 mm))
   334 JUNCTION STRUCTURE PIPE TO BOX (INLET I.D. ≤ 30" (750 mm))

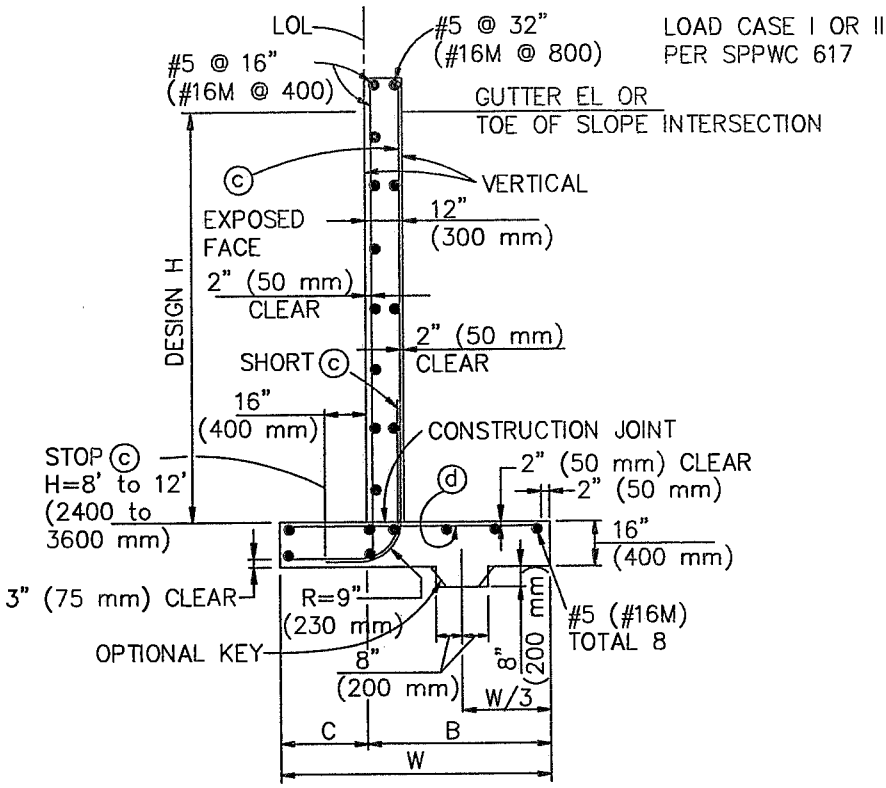

SECTION

NUMBER ABOVE SHORT c BARS
IS DISTANCE, INCHES (mm), FROM TOP OF
FOOTING TO END OF SHORT BARS

BARS ALONG EXPOSED FACE
NOT SHOWN

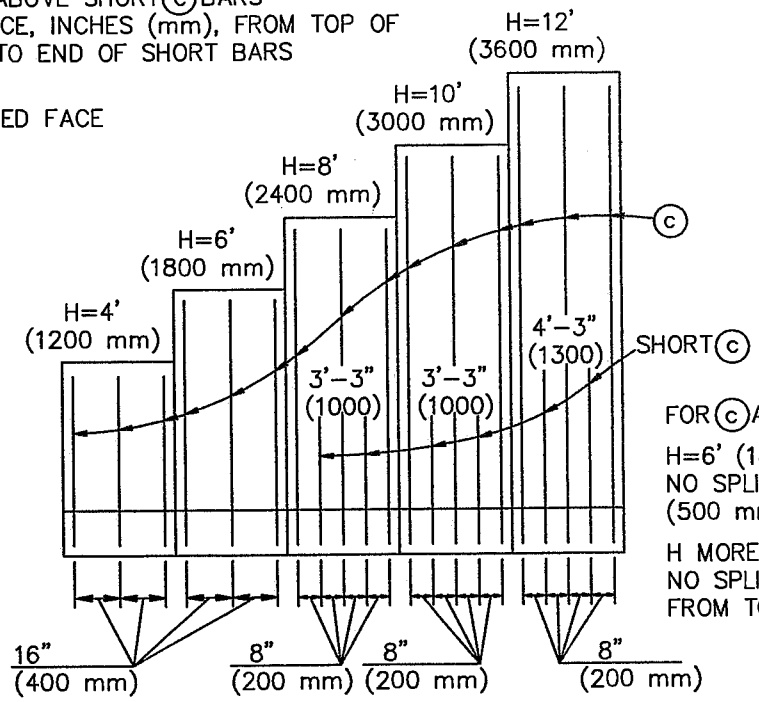

FOR c AND SHORT c BARS

H=6' (1800 mm) OR LESS:
NO SPLICES WITHIN 20"
(500 mm) FROM TOP OF FOOTING

H MORE THAN 6' (1800 mm):
NO SPLICES WITHIN H/4
FROM TOP OF FOOTING

ELEVATION

SIMILAR TO CALTRANS TYPE 1A

STANDARD PLANS FOR PUBLIC WORKS CONSTRUCTION

PROMULGATED BY THE
PUBLIC WORKS STANDARDS INC.
GREENBOOK COMMITTEE
1993
REV. 1996, 2005, 2009

REINFORCED CONCRETE RETAINING WALL TYPE 1

USE WITH STANDARD SPECIFICATIONS FOR PUBLIC WORKS CONSTRUCTION

STANDARD PLAN
610-3
SHEET 1 OF 2

TABLE OF REINFORCING STEEL, DIMENSIONS AND DATA

DESIGN H	4' (1200 mm)	6' (1800 mm)	8' (2400 mm)	10' (3000 mm)	12' (3600 mm)
W	3'–2" (1000)	4'–2" (1300)	5'–2" (1600)	6'–2" (1900)	7'–2" (2200)
C	1'–0" (300)	1'–4" (400)	1'–8" (500)	2'–0" (600)	2'–4" (700)
B	2'–2" (700)	2'–10" (900)	3'–6" (1100)	4'–2" (1300)	4'–10" (1500)
ⓒBARS	#5 @ 16" (#16M @ 400)	#5 @ 16" (#16M @ 400)	#5 @ 8" (#16M @ 200)	#6 @ 8" (#19M @ 200)	#8 @ 8" (#25M @ 200)
ⓓBARS	(#5 @ 16") (#16M @ 400)	#5 @ 16" (#16M @ 400)	#5 @ 16" (#16M @ 400)	#5 @ 8" (#16M @ 200)	#6 @ 8" (#19M @ 200)
CASE I TOE PRESSURE, psf (kPa)	1590 (75)	1930 (95)	2240 (110)	2550 (125)	2840 (135)
CASE II TOE PRESSURE, psf (kPa)	1060 (50)	1460 (70)	1860 (90)	2280 (110)	2700 (130)

NOTES:

1. SEE SPPWC 617 FOR STANDARD WALL DETAILS.
2. METRIC REINFORCING BAR SPACING IS IN MILLIMETERS.

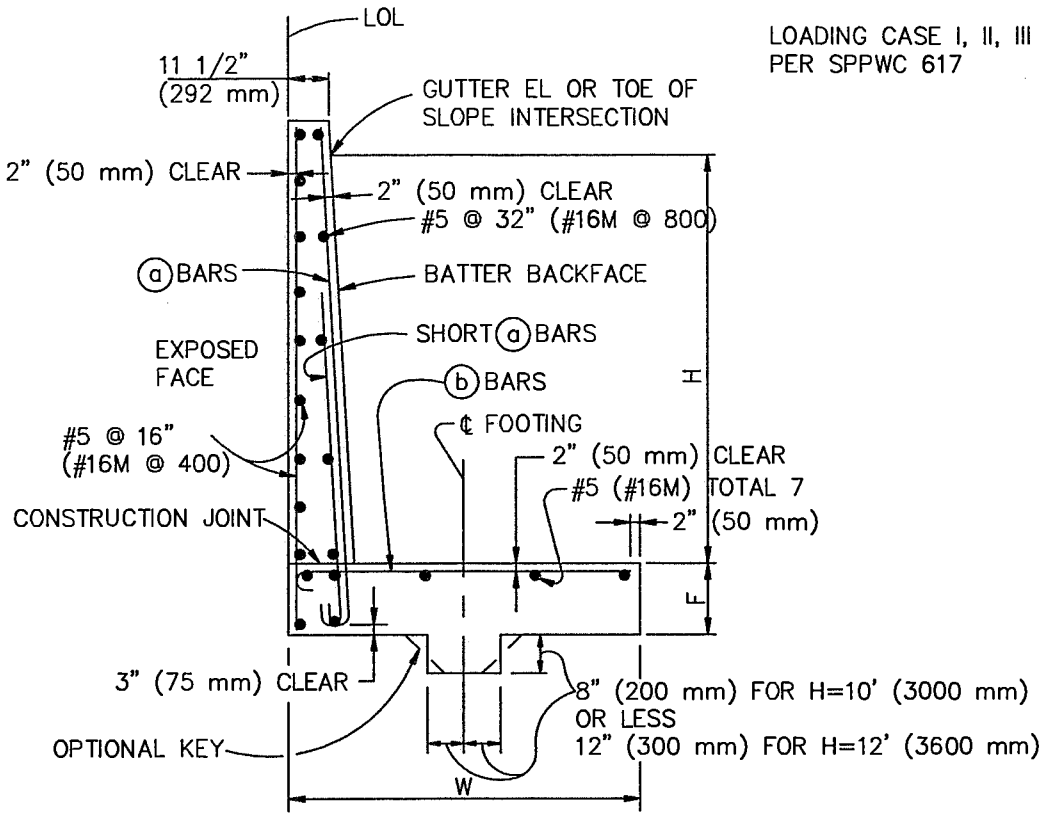

LOADING CASE I, II, III OR IV
PER SPPWC 617

SECTION

NUMBER ABOVE SHORT ⓐ
BARS IS DISTANCE, INCHES (mm), FROM
TOP OF FOOTING TO
END OF BARS

BARS ALONG EXPOSED
FACE NOT SHOWN

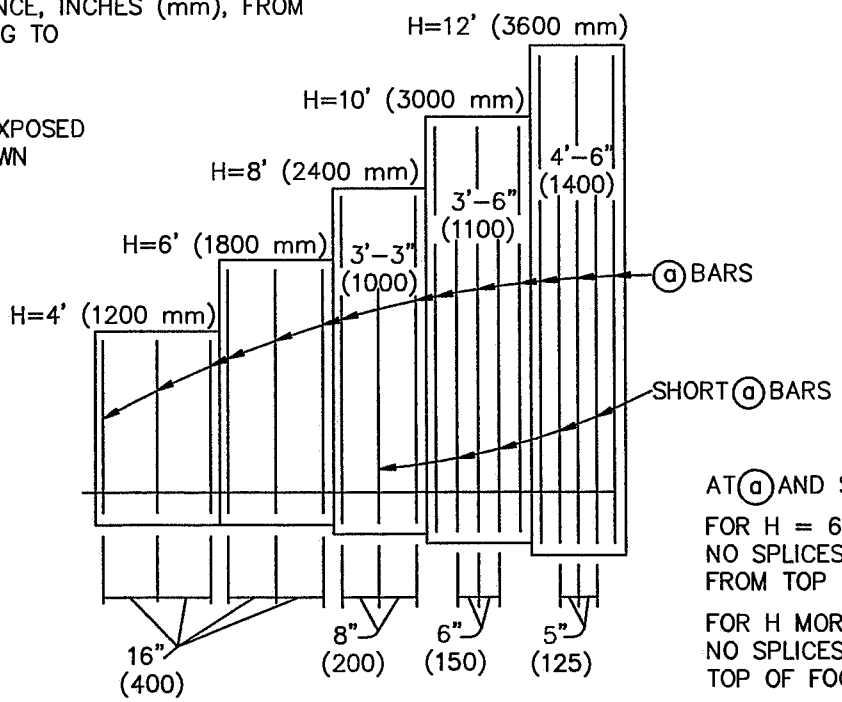

AT ⓐ AND SHORT ⓐ BARS:

FOR H = 6' (1800 mm) OR LESS,
NO SPLICES WITHIN 20" (500 mm)
FROM TOP OF FOOTING.

FOR H MORE THAN 6' (1800 mm),
NO SPLICES WITHIN H/4 FROM
TOP OF FOOTING.

ELEVATION

SIMILAR TO CALTRANS TYPE 5

STANDARD PLANS FOR PUBLIC WORKS CONSTRUCTION

PROMULGATED BY THE PUBLIC WORKS STANDARDS INC. GREENBOOK COMMITTEE 1984 REV. 1991, 1996, 2005, 2009	**REINFORCED CONCRETE RETAINING WALL TYPE 6**	STANDARD PLAN **615-4**
	USE WITH STANDARD SPECIFICATIONS FOR PUBLIC WORKS CONSTRUCTION	SHEET 1 OF 2

TABLE OF REINFORCING STEEL, DIMENSIONS AND DATA

DESIGN H		4' (1200 mm)	6' (1800)	8' (2400)	10' (3000)	12' (3600)
W		4'–0" (1250)	5'–0" (1550)	6'–6" (2000)	8'–0" (2450)	9'–6" (2900)
F		16" (400)	16" (400)	18" (450)	18" (450)	22" (550)
BATTER		NONE	NONE	NONE	100:3	100:6
ⓐ BARS		#5 @ 16" (#16M @ 400)	#5 @ 16" (#16M @ 400)	#5 @ 16" (#16M @ 400)	#5 @ 12" (#16M @ 300)	#5 @ 10" (#16M @ 250)
SHORT ⓐ BARS		———	———	#5 @ 16" (#16M @ 400)	#5 @ 12" (#16M @ 300)	#5 @ 10" (#16M @ 250)
ⓑ BARS		#5 @ 16" (#16M @ 400)	#5 @ 16" (#16M @ 400)	#5 @ 8" (#16M @ 200)	#5 @ 6" (#16M @ 150)	#5 @ 5" (#16M @ 125)
TOE PRESSURE	CASE I psf (kPa)	1600 (80)	2200 (105)	2500 (120)	3000 (145)	3500 (170)
	CASE II psf (kPa)	1500 (75)	2100 (100)	2700 (130)	3400 (165)	4100 (195)
	CASE III psf (kPa)	1600 (80)	2300 (110)	2900 (140)	3800 (185)	4400 (210)
	CASE IV psf (kPa)	2000 (95)	3200 (155)	4200 (200)	5300 (255)	6500 (310)

NOTES:

1. SEE SPPWC 617 FOR STANDARD WALL DETAILS.
2. METRIC REINFORCING BAR SPACING IS IN MILLIMETERS.

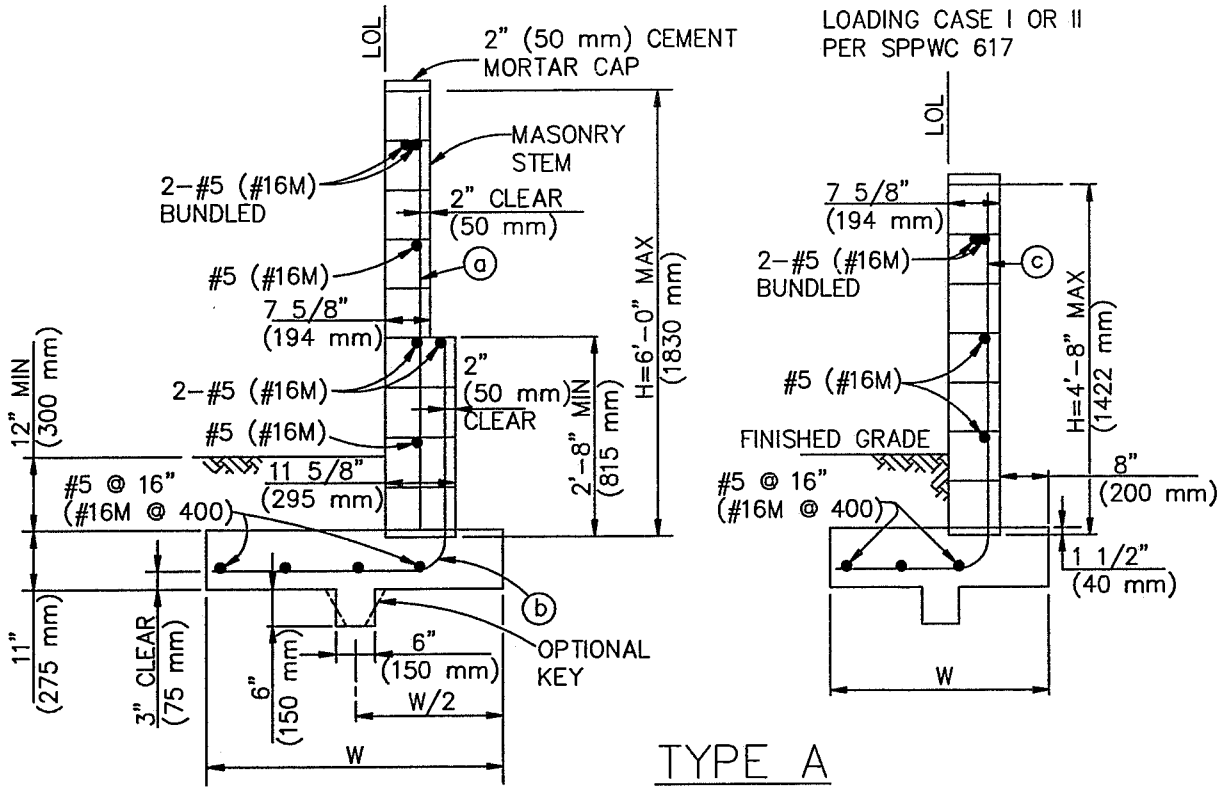

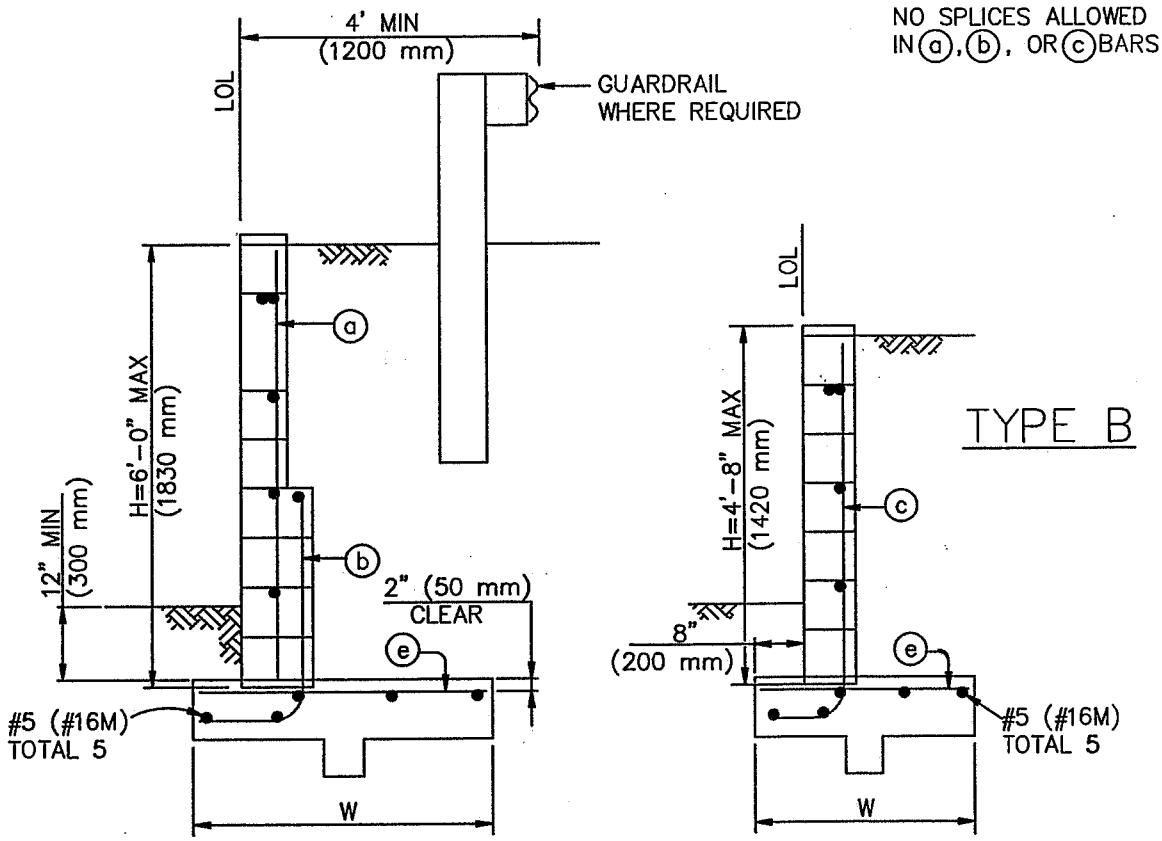

NO SPLICES ALLOWED IN (a), (b), OR (c) BARS

SIMILAR TO CALTRANS TYPE 6

STANDARD PLANS FOR PUBLIC WORKS CONSTRUCTION

PROMULGATED BY THE PUBLIC WORKS STANDARDS INC. GREENBOOK COMMITTEE 1993 REV. 1996, 2005, 2009

MASONRY RETAINING WALL

USE WITH STANDARD SPECIFICATIONS FOR PUBLIC WORKS CONSTRUCTION

STANDARD PLAN 618-3

SHEET 1 OF 3

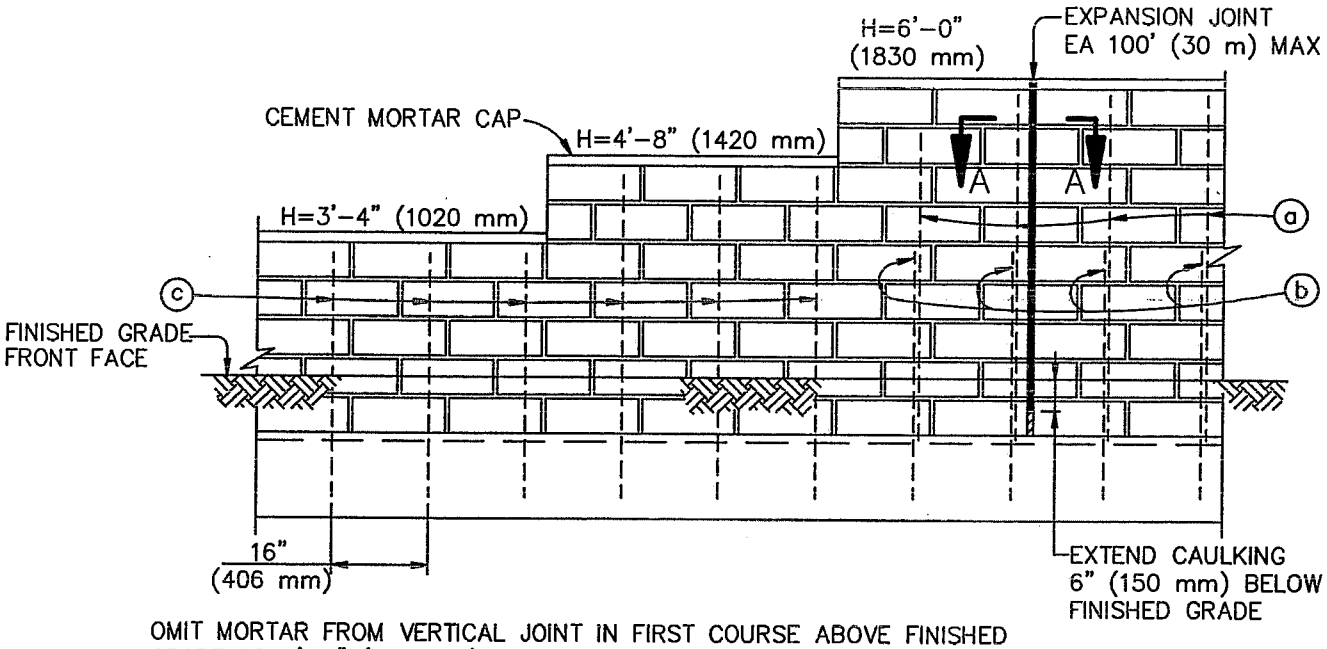

OMIT MORTAR FROM VERTICAL JOINT IN FIRST COURSE ABOVE FINISHED GRADE AT 2'-8" (813 mm) CENTERS FOR WEEP HOLES. FILL ALL CELLS WITH GROUT.

ELEVATION

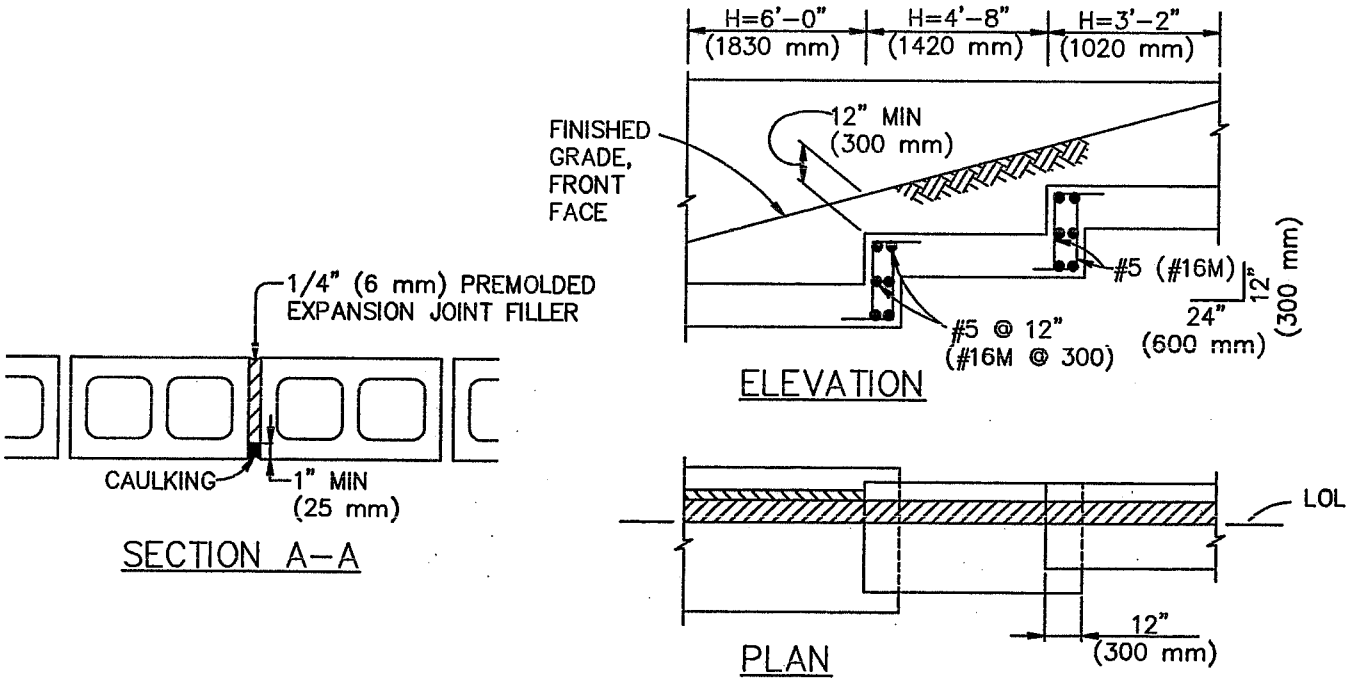

FOOTING STEP DETAILS

STANDARD PLANS FOR PUBLIC WORKS CONSTRUCTION	STANDARD PLAN
MASONRY RETAINING WALL	**618-3**
	SHEET 2 OF 3

TYPE A WALL

DESIGN H	3'–4" (1020)	4'–0" (1220)	4'–8" (1420)	5'–4" (1630)	6'–0" (1830)
W	3'–2" (1000 mm)	3'–6" (1100)	3'–10" (1200)	4'–2" (1300)	4'–6" (1400)
ⓐ BARS	———	———	———	#5 @ 16" (#16M @ 406)	#5 @ 16" (#16M @ 406)
ⓑ BARS	———	———	———	#5 @ 16" (#16M @ 406)	#5 @ 16" (#16M @ 406)
ⓒ BARS	#5 @ 16" (#16M @ 406)	#5 @ 16" (#16M @ 406)	#5 @ 16" (#16M @ 406)	———	———

TYPE B WALL

DESIGN H	3'–4" (1020 mm)	4'–0" (1220)	4'–8" (1420)	5'–4" (1630)	6'–0" (1830)
W	2'–8" (850)	3'–0" (950)	3'–4" (1050)	3'–8" (1150)	4'–0" (1250)
ⓐ BARS	———	———	———	#5 @ 15" (#16M @ 375)	#5 @ 15" (#16M @ 375)
ⓑ BARS	———	———	———	#5 @ 15" (#16M @ 375)	#5 @ 15" (#16M @ 375)
ⓒ BARS	#5 @ 15" (#16M @ 375)	#5 @ 15" (#16M @ 375)	#5 @ 15" (#16M @ 375)	———	———
ⓔ BARS	#5 @ 15" (#16M @ 375)	#5 @ 15" (#16M @ 375)	#5 @ 15" (#16M @ 375)	#5 @ 15" (#16M @ 375)	#5 @ 12" (#16M @ 300)

DESIGN DATA (SEE SPPWC 617 FOR PCC, STEEL, AND OTHER SOIL DATA)

f_m = 500 psi (3.5 MPa) f'_m = 1500 psi (10.5 MPa)

REQUIRED SOIL BEARING CAPACITY 2000 psf (95 kPa)

NOTES:

1. SEE SPPWC 617 FOR STANDARD WALL DETAILS.
2. METRIC REINFORCING BAR SPACING IS IN MILLIMETERS.

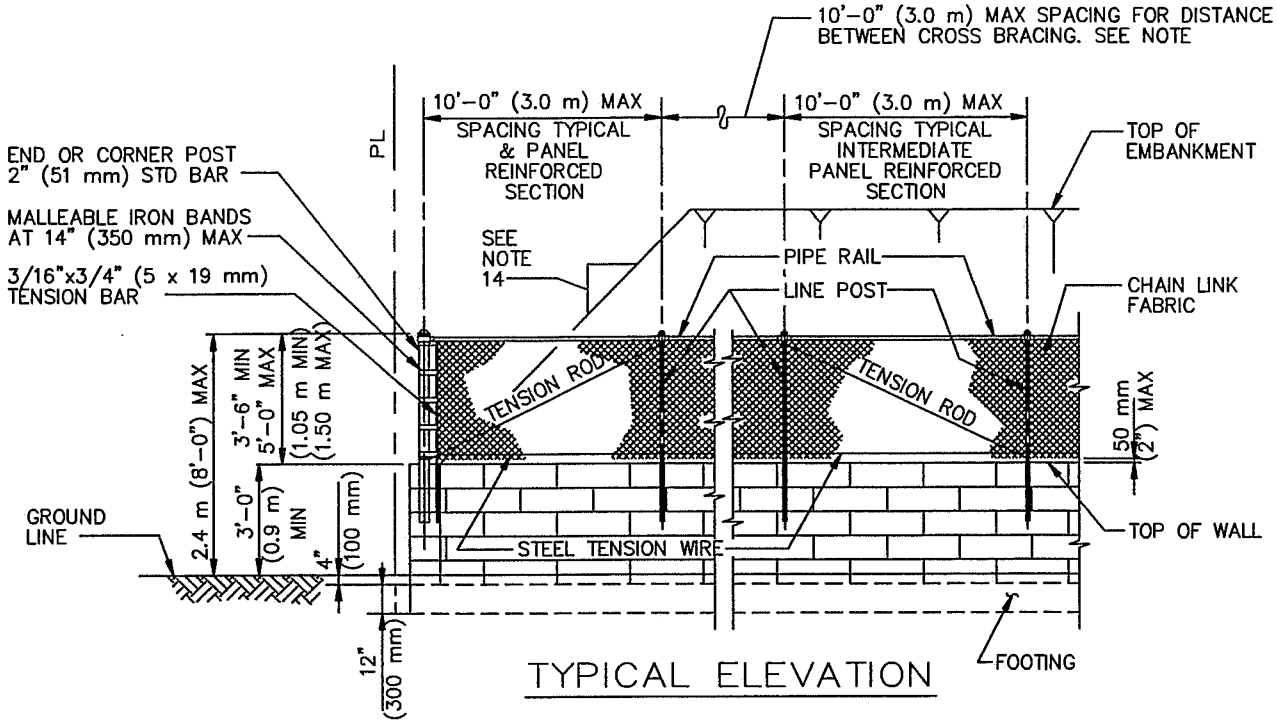

TYPICAL ELEVATION

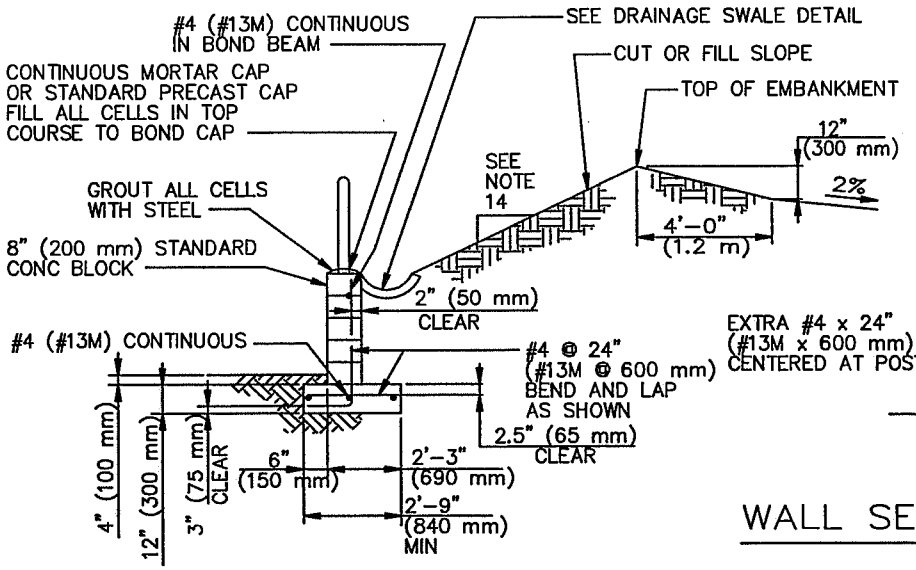

TYPICAL WALL SECTION

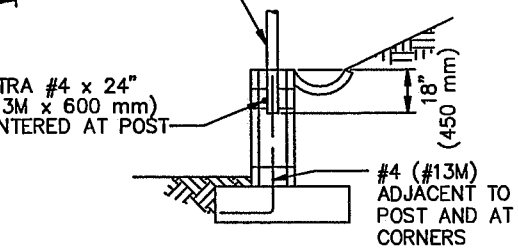

WALL SECTION AT POST

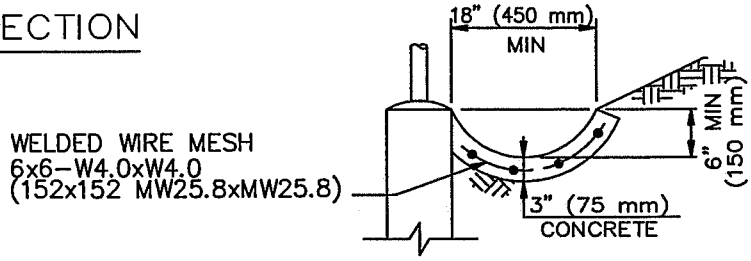

DRAINAGE SWALE DETAIL

STANDARD PLANS FOR PUBLIC WORKS CONSTRUCTION

PROMULGATED BY THE PUBLIC WORKS STANDARDS INC. GREENBOOK COMMITTEE 1993 REV. 1996, 2009

REINFORCED CONCRETE BLOCK WALL AND CHAIN LINK FENCE COMBINATION

USE WITH STANDARD SPECIFICATIONS FOR PUBLIC WORKS CONSTRUCTION

STANDARD PLAN 621-2

SHEET 1 OF 2

NOTES:

1. THE BLOCK WALL SHALL BE CONSTRUCTED IN ACCORDANCE WITH SSPWC 303-4.1.
2. USE STANDARD 8" (200 mm) WIDE NORMAL WEIGHT CONCRETE BLOCK PER SSPWC 202-2.
3. USE CONCRETE BOND BEAM BLOCK WHERE HORIZONTAL STEEL IS CALLED FOR.
4. MORTAR, GROUT AND WATER SHALL BE IN ACCORDANCE WITH SSPWC 202-2.
5. REINFORCING STEEL SHALL BE GRADE 40 (GRADE 300) PER SSPWC 201-2.
6. ALL BLOCKS SHALL BE LAID UP IN MORTAR HEAD AND BED JOINTS FOR FULL THICKNESS OF FACE SHELLS. WEBS OF EACH COURSE SHALL CENTER ON WEBS OF COURSES BELOW. OMIT HEAD JOINT IN GRADE COURSE.
7. PLACE A MINIMUM 4" (100 mm) LAYER OF NO. 4 CONCRETE AGGREGATE BETWEEN THE SOIL BACKFILL AND THE OPEN HEAD JOINT.
8. ALL CELLS IN WHICH STEEL IS PLACED SHALL BE FILLED WITH GROUT.
9. CONCRETE SHALL BE 500-A-2500 (310-A-17) PER SSPWC 201-2.
10. POUR FOOTING AGAINST UNDISTURBED NATURAL SOIL OR SOIL THAT HAS BEEN COMPACTED TO 90% OPTIMUM DENSITY PER ASTM D1557-78.
11. CHAIN LINK FENCING SHALL BE CONSTRUCTED IN ACCORDANCE WITH SSPWC 304-3. MATERIAL SHALL BE IN ACCORDANCE WITH SSPWC 206-6.
12. PROVIDE OPEN HEAD JOINTS AT INTERVALS NO GREATER THAN 48" (1.2 m). WHERE WALL IS LOCATED ADJACENT TO A SIDEWALK, PROVIDE 2" ø (50 mm ø) WEEP HOLES UNDER SIDEWALK.
13. FOR PRIVATE PROPERTY, USE 1V:2H SLOPE. FOR PUBLIC PROPERTY, USE ENGINEER'S DESIGNATION.
14. WELDED WIRE MESH SHALL BE PER SSPWC 201-2.4.

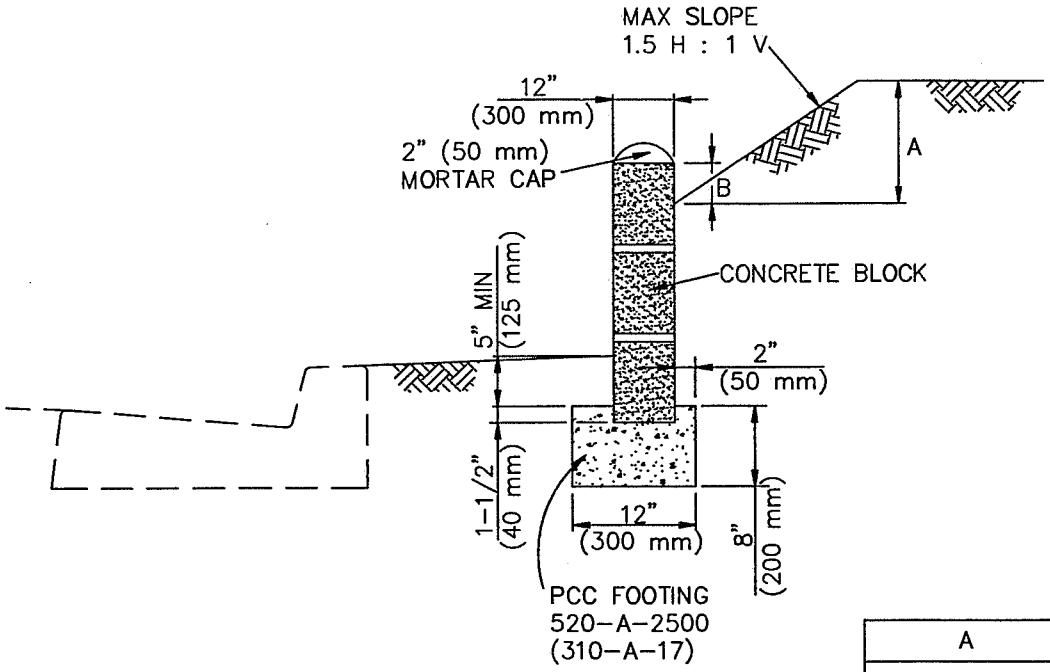

A	B
0 TO 6" (0 TO 150 mm)	2" (50 mm)
6" TO 16" (151 TO 400 mm)	4" (100 mm)
17" TO 48" (410 TO 1200 mm)	6" (150 mm)

NOTES:

1. MAX HEIGHT OF WALL IS 3 COURSES OF 8" (200 mm) HIGH BLOCK.
2. NO LIVE-LOAD SURCHARGE SHALL BE ALLOWED ON RETAINED SOIL.
3. POUR FOOTING AGAINST UNDISTURBED EARTH.
4. TOP OF FOOTING MAY BE PLACED AT SAME GRADE AS STREET IF STREET GRADE IS UNIFORM AND 5% MAX.
5. PLACE CONCRETE BLOCKS IMMEDIATELY AFTER POURING THE FOOTING. FILL ALL CELLS SOLID WITH GROUT AND ROD SO THAT GROUT IS MONOLITHIC WITH FOOTING.
6. IN FIRST COURSE ABOVE FINISHED GRADE, OMIT MORTAR FROM VERTICAL JOINTS EACH 32" (800 mm) TO SERVE AS WEEP HOLES.

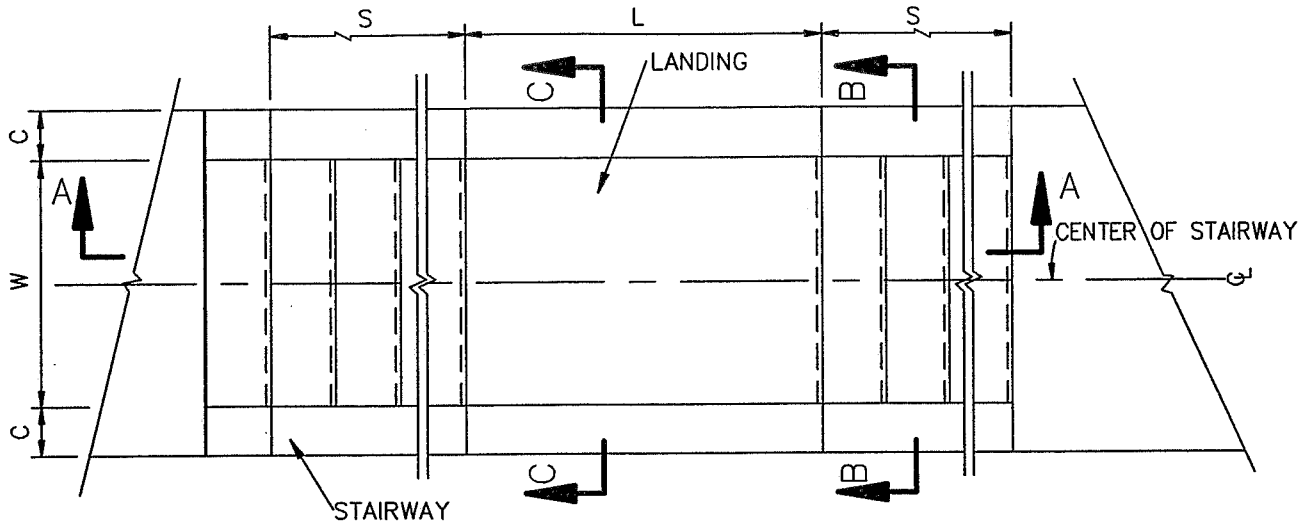

PLAN

SEE PLANS OR SPPWC 606
FOR HANDRAIL DETAILS.

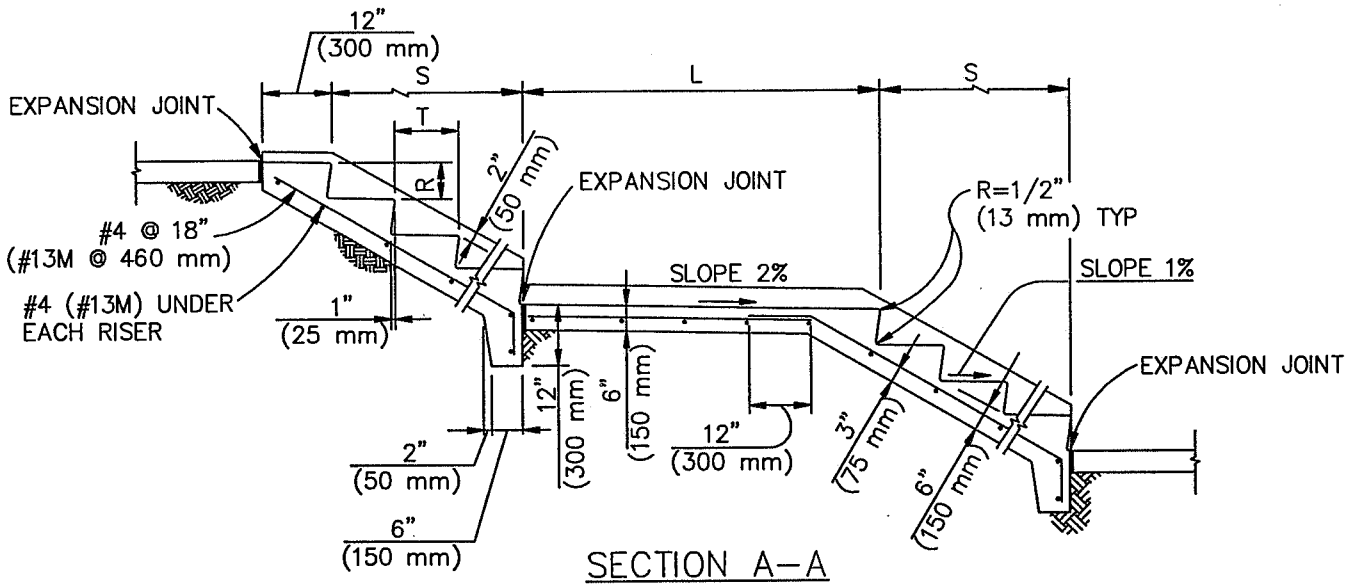

SECTION A–A

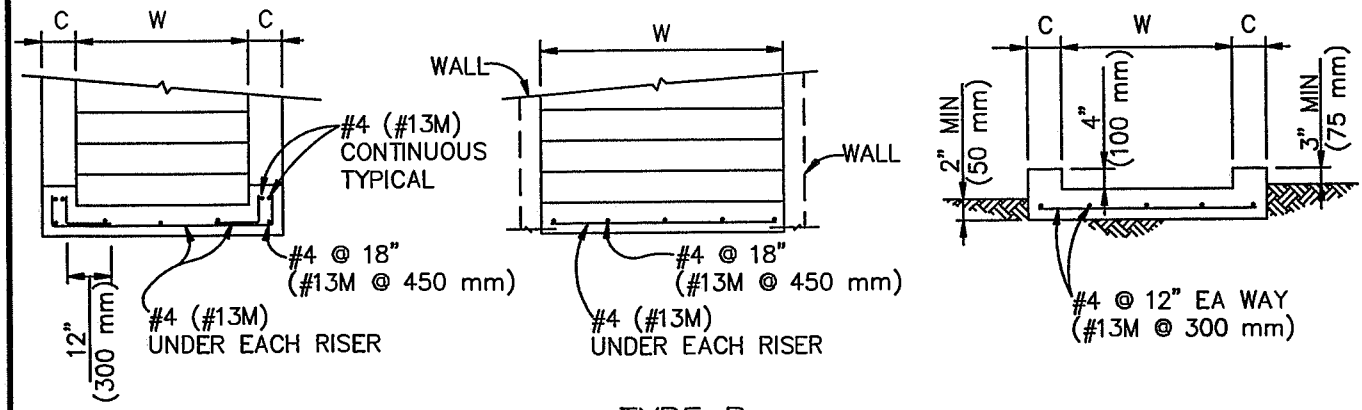

TYPE A

TYPE B

SECTION B–B

SECTION C–C

STANDARD PLANS FOR PUBLIC WORKS CONSTRUCTION

PROMULGATED BY THE
PUBLIC WORKS STANDARDS INC.
GREENBOOK COMMITTEE
1993
REV. 1996, 2005, 2009

REINFORCED CONCRETE STAIRWAY

USE WITH STANDARD SPECIFICATIONS FOR PUBLIC WORKS CONSTRUCTION

STANDARD PLAN
640–3
SHEET 1 OF 2

NOTES:

1. SEE THE PLANS FOR THE FOLLOWING INFORMATION:
   TYPE OF STAIRWAY AND LOCATION
   W = WIDTH OF STAIRWAY
   L = LENGTH OF LANDINGS
   T = LENGTH OF TREAD
   R = HEIGHT OF RISER
   C = WIDTH OF CURB
   S = LENGTH OF STAIRWAY FLIGHT

2. CONCRETE FINISH FOR EXPOSED SURFACES SHALL BE CLASS I, EXCEPT THAT TREADS AND LANDINGS SHALL BE TROWELLED SMOOTH AND GIVEN A FINE BROOM FINISH IN A DIRECTION PERPENDICULAR TO THE CENTERLINE OF THE STAIRWAY. THE BROOM FINISH SHALL BE BROUGHT TO THE NOSE OF THE TREADS AND LANDINGS.

3. ONE HANDRAIL IS REQUIRED FOR STAIRWAYS 4' (1.22 m) WIDE OR LESS. TWO HANDRAILS ARE REQUIRED FOR WIDER STAIRWAYS.

APPENDIX E2

RIVERSIDE COUNTY FLOOD CONTROL AND WATER CONSERVATION DISTRICT (RCFC&WCD) STANDARD PLANS

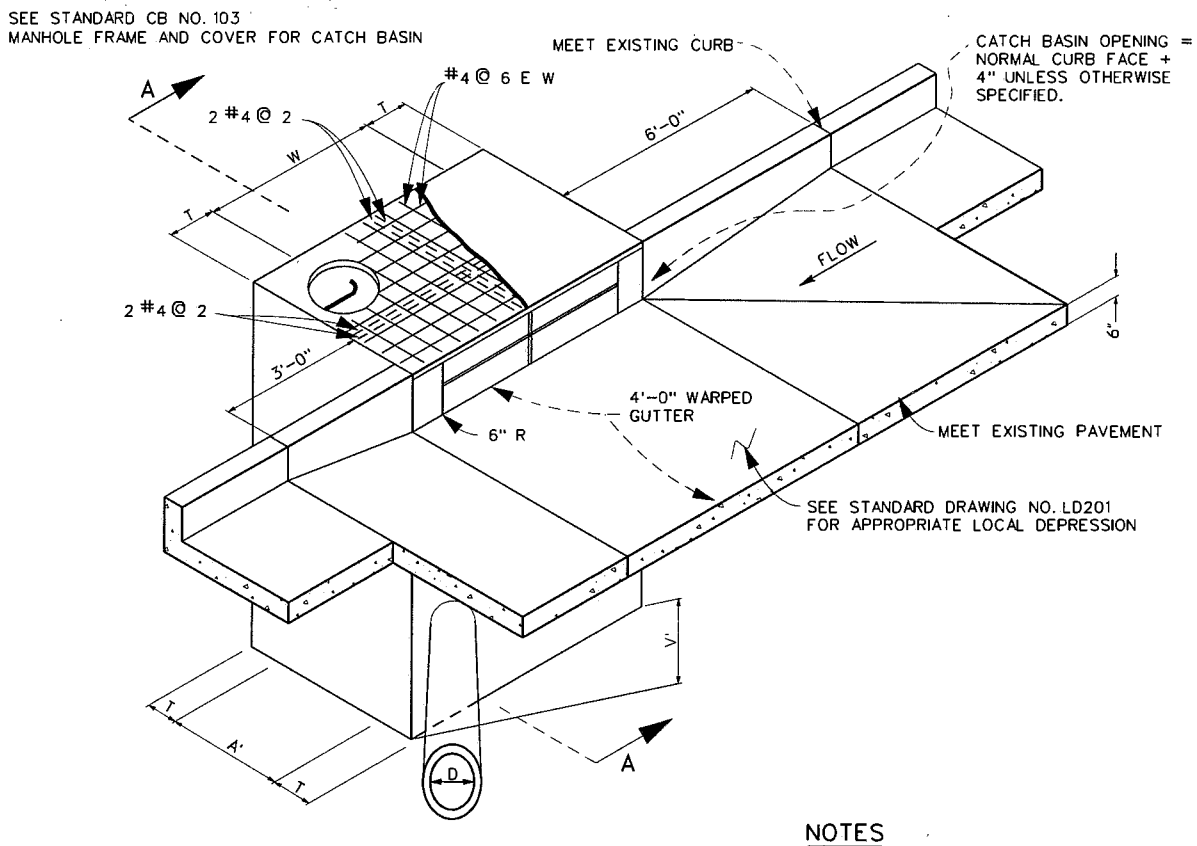

PERSPECTIVE OF CATCH BASIN NO.1

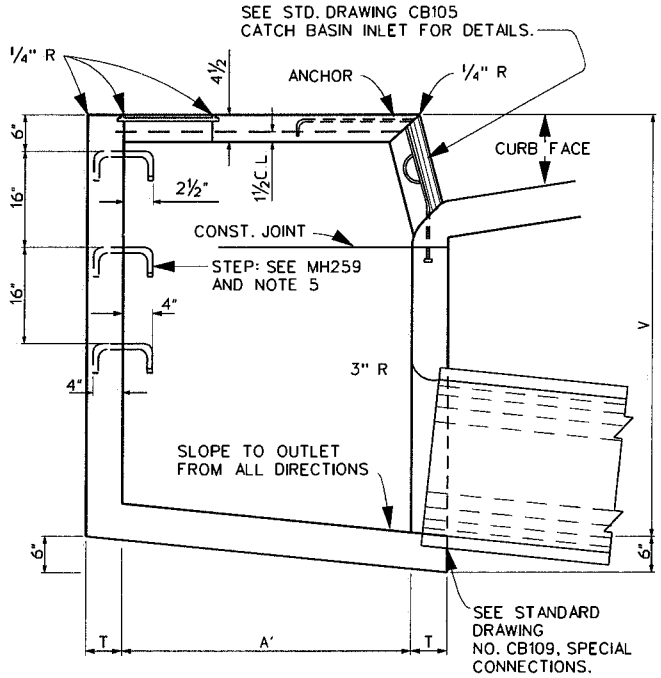

SECTION A–A

NOTES

1. DIMENSIONS: UNLESS OTHERWISE SPECIFIED
   V' = 6"@ W =7',9"@ W =14',12"@ W =21'
   V = SHALL BE SHOWN ON THE PLANS.
   W = SHALL BE SHOWN ON THE PLANS (7 FOOT MIN.)
   T = 6" IF V IS 4' OR LESS.
   T = 8" IF V IS LESS THAN 8'.
   T = 10" IF V IS 8' OR MORE.
   D = 18" UNLESS OTHERWISE SPECIFIED.
   A' = 38" UNLESS OTHERWISE SPECIFIED.
2. STRUCTURAL CONCRETE SHALL BE CLASS "A" P.C.C. (6 SACK)
3. THE REINFORCING STEEL SHALL BE NUMBER 4 DEFORMED BARS. CLEARANCE SHALL BE 1 1/2" FROM THE BOTTOM OF THE SLAB. SEE NOTE 7.
4. THE SURFACE OF ALL EXPOSED CONCRETE SHALL CONFORM TO SLOPE, GRADE, COLOR, FINISH AND SCORING IN THE EXISTING OR PROPOSED CURB & WALK ADJACENT TO THE BASIN. THE BASIN FLOOR SHALL BE GIVEN A TIGHT WOOD FLOAT FINISH. CURVATURE OF THE LIP AND SIDEWALLS AT THE GUTTER OPENING SHALL NOT BE MADE BY PLASTERING. THE OUTLET PIPE SHALL BE TRIMMED TO FINAL SHAPE AND LENGTH BEFORE THE CONCRETE IS POURED.
5. STEPS:
   3/4" PLAIN ROUND GALVANIZED STEEL STEPS SHALL BE INSTALLED 16" APART WHEN V EXCEEDS 4'–6". THE TOP STEP SHALL BE 6" BELOW THE TOP SURFACE AND SHALL BE 2 1/2" CLEAR FROM THE WALL . ALL OTHER STEPS SHALL BE 4" CLEAR FROM THE WALL. ONLY ONE STEP 12" FROM THE BOTTOM SHALL BE INSTALLED IF V IS 4'–6" OR LESS. ALL STEPS SHALL BE ANCHORED NOT LESS THAN 4" INTO THE WALL OF THE BASIN.
6. CURB, GUTTER AND LOCAL DEPRESSIONS SHALL BE CLASS "B" CONCRETE.
7. SEE STANDARD DRAWING CB106 FOR WALL & FLOOR STEEL REINFORCING.

REGISTERED PROFESSIONAL ENGINEER
WARREN D. WILLIAMS
No. 32336
Exp. 12-31-06
CIVIL
STATE OF CALIFORNIA

RIVERSIDE COUNTY FLOOD CONTROL AND WATER CONSERVATION DISTRICT

APPROVED BY:

CHIEF ENGINEER

DATE: JAN.10, 2005 R.E. NO. 32336

CATCH BASIN NO.1

STANDARD DRAWING NUMBER CB100

L.A.C.F.C.D. No. 2–D162, 2–D163

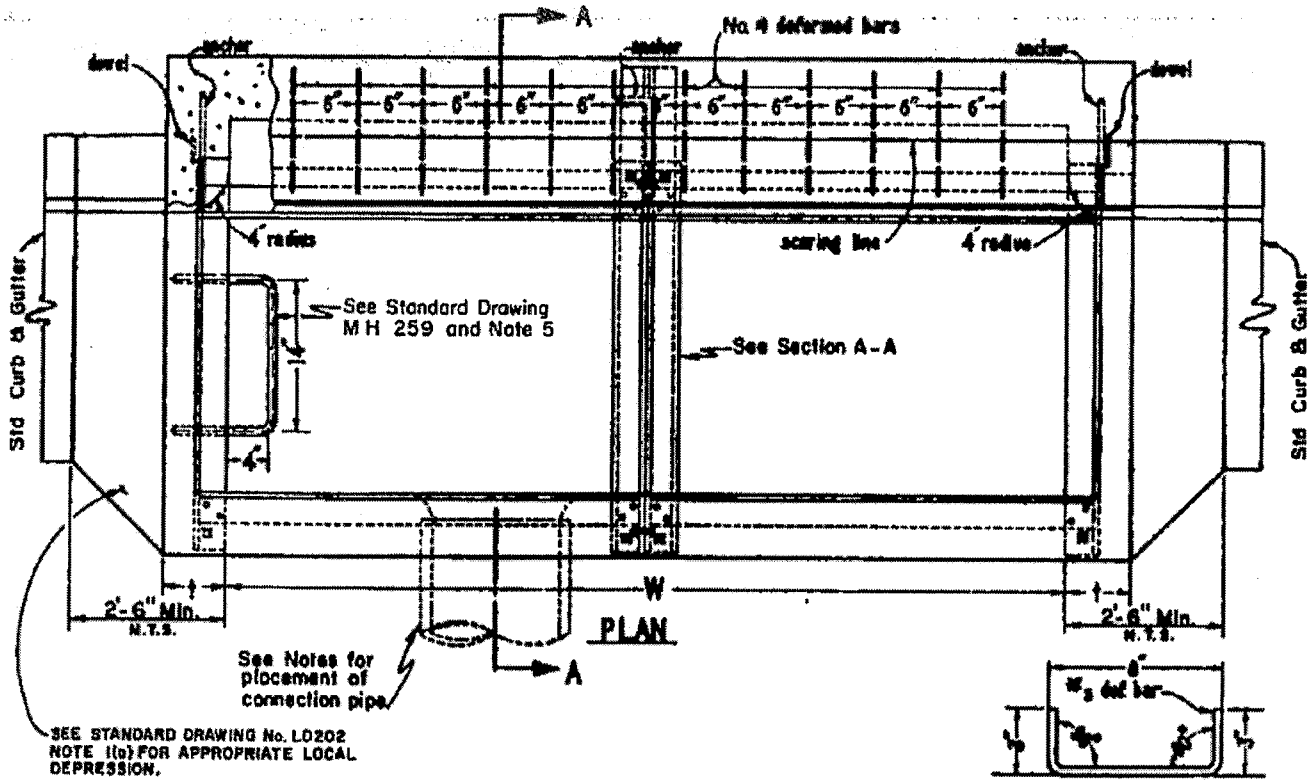

DETAIL OF DOWEL

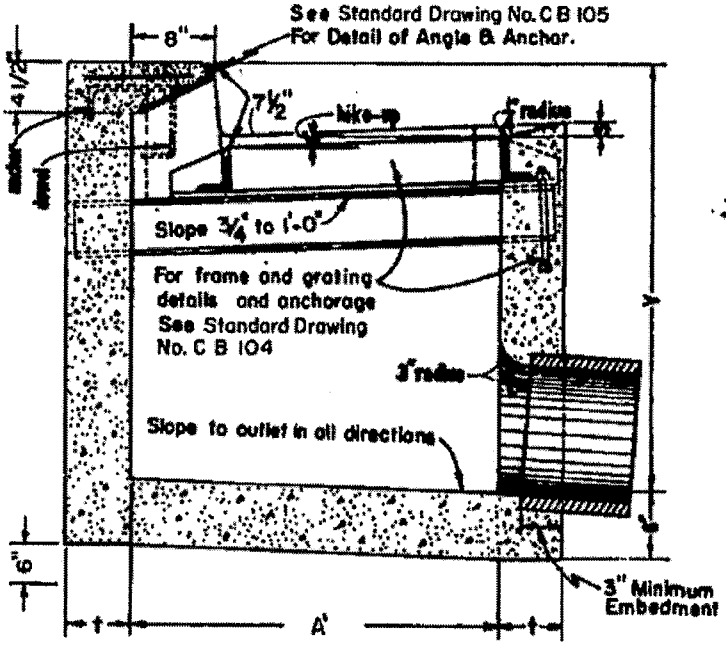

SECTION - AA

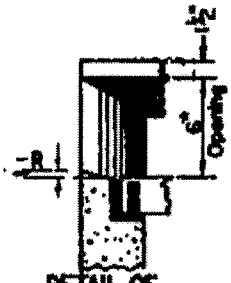

DETAIL OF
END WALL

STEEL LIST					
No. of gratings	#4 Def. bars 11" long	5/16"x10" Face Plate	Dowels	Anchors	3/4" Galv. steel steps
1	5	3'-11"	2	2	See notes
2	12	7'-4"	2	3	
3	19	10'-10"	2	4	

⚠

A'	GRATE TYPE
34"	R.C.F.C. STD. CB104
32"	CALTRANS STD. D77-8

CITY OF RIV. STD. NO. 406
CITY OF L.A. STD. NO. B-1536

REGISTERED PROFESSIONAL ENGINEER
WARREN D. WILLIAMS
No. 32336
Exp. 12-31-04
CIVIL
STATE OF CALIFORNIA

RIVERSIDE COUNTY FLOOD CONTROL
AND
WATER CONSERVATION DISTRICT

APPROVED BY:
CHIEF ENGINEER
DATE: April 5, 2004
R.C.E. NO. 32336

CATCH BASIN
NO. 4

STANDARD DRAWING NUMBER CB101
SHEET 1 OF 2

NOTES FOR CATCH BASIN NO. 4

1. Dimensions: Unless otherwise specified.

   V = 3.5 feet.
   T = 6 inches, if V is 4 feet or less.
   T = 8 inches, if V is between 4 feet and 8 feet.
   T = 10 inches, if V is 8 feet or over.
   W = 2 feet, 11-3/8 inches for one grating. Add 3 feet, 5-3/8 inches for each additional grating.
   Hike-up shall be parallel to plane of gutter - slope 3/4 inch to 1 foot.
   Slope of floor parallel with curb shall be 1 in 12.

   S = 1½ inches.
   R = 3/4 inch.

2. Concrete shall be Class "A" Portland Cement Concrete (6.0 Sack).

3. The reinforcing steel shall be Number 4 deformed bars. Clearance shall be 1-1/2 inches from top of slab. See standard drawing CB106 and note 3.

4. The surface of all exposed concrete shall conform to slope, grade, color, finish, and scoring in the existing of proposed curb and walk adjacent to the basin. The basin floor shall be given a tight wood float finish. Curvature of the lip and sidewalls at the gutter opening shall not be made by plastering. The outlet pipe shall be trimmed to final shape and length before the concrete is poured.

5. Steps: 3/4 inch plain round galvanized steel steps are required as follows:

   If V is 4.5 feet or less, no steps are required.
   If V is more than 4.5 feet, and not more than 5.0 feet, install one step 12 inches above floor of basin.
   If V is more than 5.0 feet, install steps 16 inches apart, with the top step 6 inches below the top of grating.
   All steps shall be 4 inches clear from the wall, and anchored not less than 4 inches in wall of basin.

CITY OF RIV. STD. NO. 406
CITY OF L.A. STD. NO. B-1536

REGISTERED PROFESSIONAL ENGINEER WARREN D. WILLIAMS No. 32336 Exp. 12-31-04 CIVIL STATE OF CALIFORNIA

RIVERSIDE COUNTY FLOOD CONTROL AND WATER CONSERVATION DISTRICT
APPROVED BY:
CHIEF ENGINEER
DATE: April 5, 2004 R.C.E. NO. 32336

CATCH BASIN NO. 4

STANDARD DRAWING NUMBER CB101
SHEET 2 OF 2

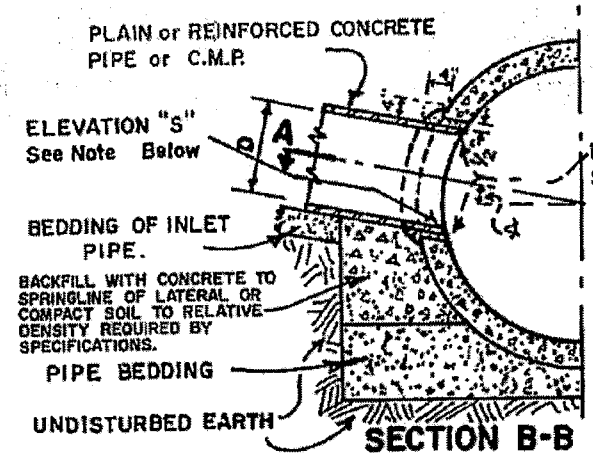

SECTION B-B

CASE-1

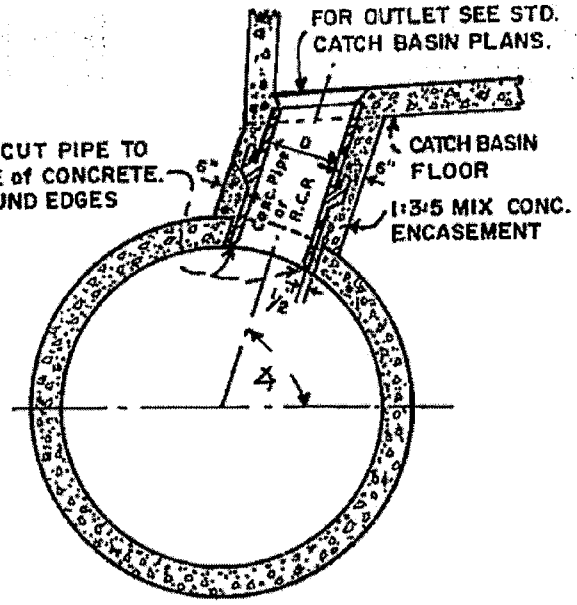

CASE-2

CATCH BASIN ABOVE STORM DRAIN

NOTE

ALL CONNECTOR PIPES (within the angles specified for Case 2) shall be encased when laid within the main line excavated trench, or when laid on fill which has not been densified.

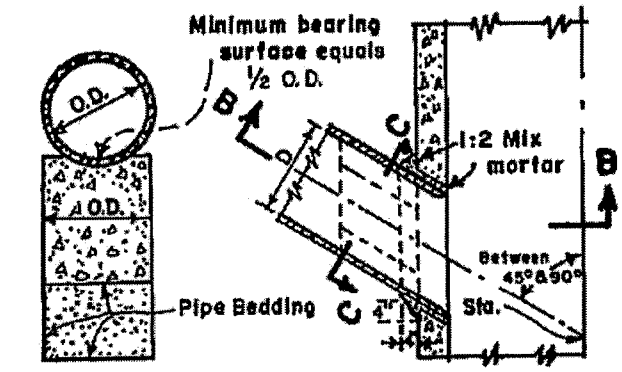

SECTION C-C

SECTION A-A

CASE-1-SIDE INLET

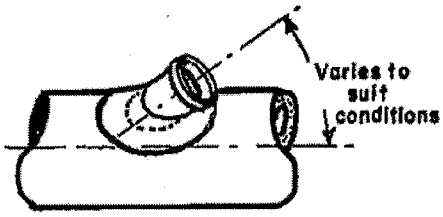

PLAN

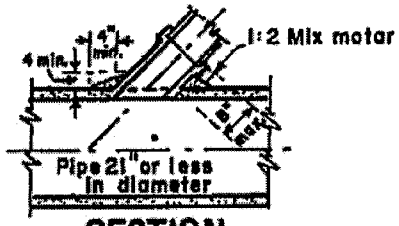

SECTION

CASE-3-SADDLE CONNECTION

NOTES CASES 1 & 2

1. D shall be 24" or less, and in no case shall the outside diameter of the inlet pipe exceed one-half the inside diameter of the main line. If ∡ is 45° or less, use Case 1. If ∡ is greater than 45°, use Case 2.
2. ℄ of inlet shall be on radius of main storm drain except when elevation "S" is shown on project drawing PROFILE.
3. The minimum opening into the existing storm drain shall be the outside diameter of the connecting pipe plus 1 inch.
4. All corrugated metal pipe and fittings shall be galvanized.
5. Sta. at F.L. & center of pipe, shown on project dwg. PROFILE

NOTES CASE-3-SADDLE CONNECTION

1. Connections to pipes 21" or less in diameter without junction structures or precast Y branches shall be made with saddles.
2. Trim or cut saddle to fit snugly over the outside of the main pipe and so it's axis will be on the line and grade of the connecting pipe.
3. The opening into the pipe shall be cut and trimmed to fit the saddle so that no part will project within the bore of the saddle pipe.
4. The connecting pipe shall be supported as shown in Case 1 and 2.

REGISTERED PROFESSIONAL ENGINEER WARREN D. WILLIAMS No. 32338 Exp. 12-31-04 CIVIL STATE OF CALIFORNIA

RIVERSIDE COUNTY FLOOD CONTROL AND WATER CONSERVATION DISTRICT

APPROVED BY: _____ CHIEF ENGINEER

DATE: April 5, 2004 R.C.E. NO. 32338

JUNCTION STRUCTURE NO. 4

STANDARD DRAWING NUMBER JS229

L.A.C.F.C.D. STD. NO. 2-0183

L.A.C.F.C.D. No. 2-D88

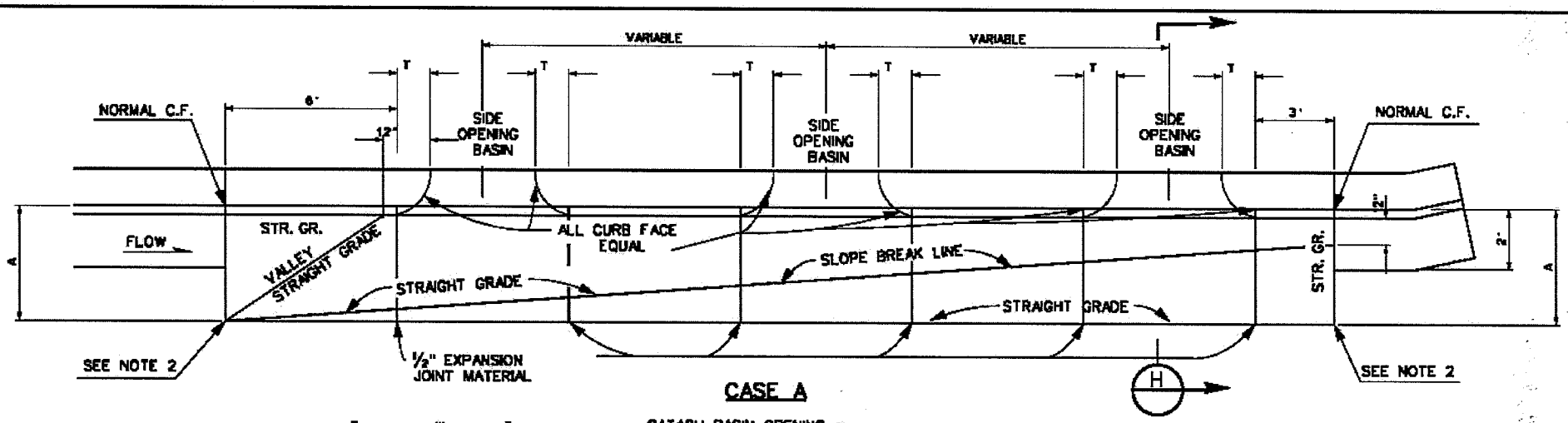

CASE A

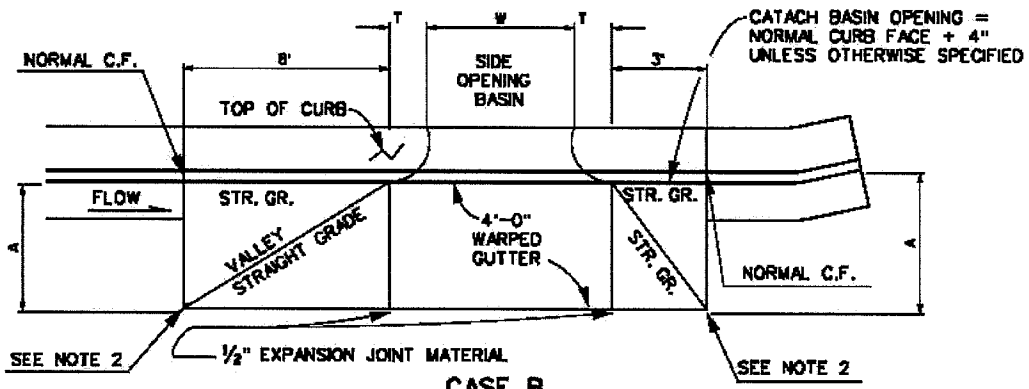

CASE B

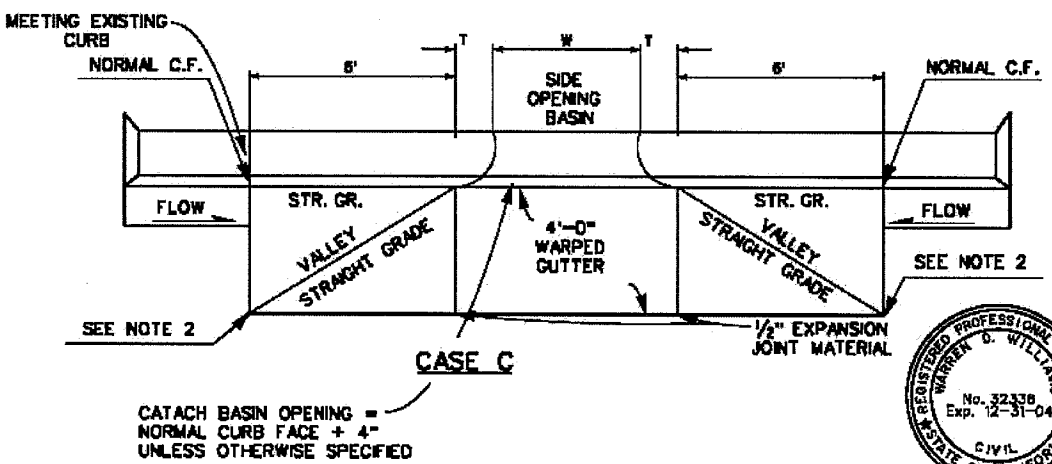

CASE C

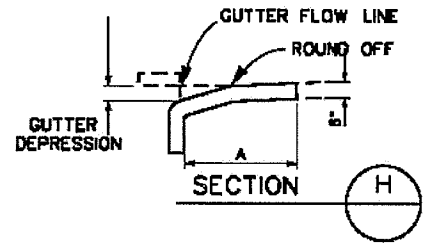

NOTES

1. LOCAL DEPRESSION SHALL BE CASE B OTHERWISE SPECIFIED ON GENERAL PLAN.
2. ELEVATIONS AT OUTER CORNERS SHOWN ON GENERAL PLAN. IF NO ELEVATIONS ARE SPECIFIED, THE OUTER EDGE OF LOCAL DEPRESSION SHALL CONFORM TO FINISHED STREET SURFACE.
3. A= 4' UNLESS OTHERWISE SPECIFIED.
   T= SEE STANDARD DRAWING CB-100, NOTE 1.
   W= SEE STANDARD DRAWING CB-100, NOTE 1.
4. WHERE NO CURB EXIST, CURBS SHALL BE CONSTRUCTED BETWEEN ENDS OF LOCAL DEPRESSION. CURB SECTION SHALL CONFORM TO THAT OF CONTROLLING AGENCY.
5. DEPRESSION SHALL BE CLASS "B" CONCRETE

REGISTERED PROFESSIONAL ENGINEER WARREN D. WILLIAMS No. 32336 Exp. 12-31-04 CIVIL STATE OF CALIFORNIA

RIVERSIDE COUNTY FLOOD CONTROL AND WATER CONSERVATION DISTRICT

APPROVED BY: William D. Williams
CHIEF ENGINEER

DATE: April 5, 2004 R.C.E. NO. 32336

LOCAL DEPRESSION NO. 2

STANDARD DRAWING NUMBER LD201

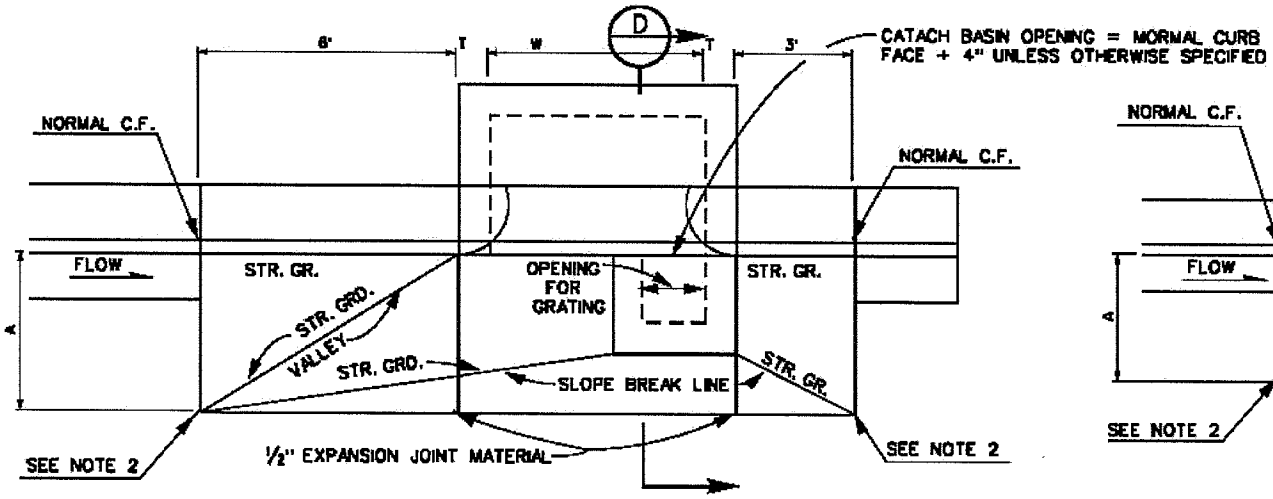

CASE B

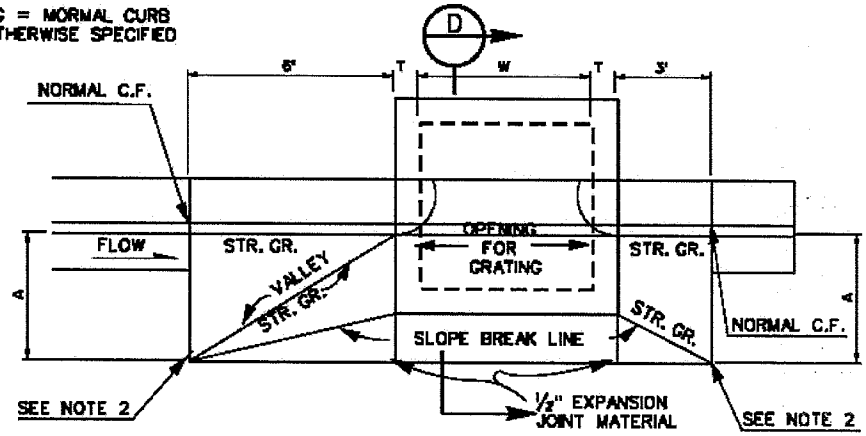

CASE A

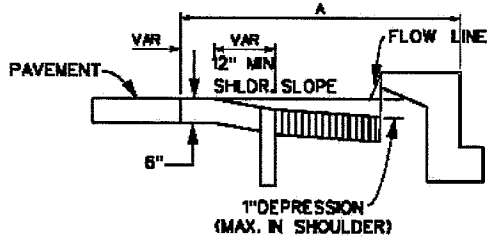

SECTION D

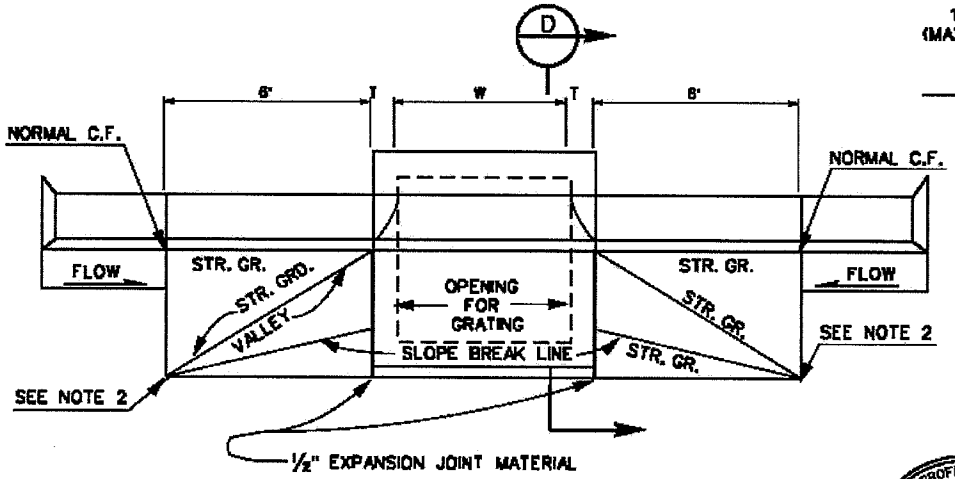

CASE C

NOTES

1. LOCAL DEPRESSION SHALL BE:
   (A) CASE "A" FOR CATCH BASIN NO. 4 (SEE STANDARD DRAWING CB 101) UNLESS OTHERWISE SPECIFIED.
   (B) CASE"B" FOR CATCH BASIN NO. 6 (SEE STANDARD DRAWING CB 102) UNLESS OTHERWISE SPECIFIED.
2. ELEVATIONS AT OUTER CORNERS SHOWN ON PROJECT DRAWINGS. IF NO ELEVATIONS ARE SPECIFIED, THE OUTER EDGE OF LOCAL DEPRESSION SHALL CONFORM TO FINISHED STREET SURFACE.
3. A= 4' UNLESS OTHERWISE SPECIFIED.
   T= SEE STANDARD DRAWING CB101 OR CB102
   W= SEE STANDARD DRAWING CB101 OR CB102
4. WHERE NO CURB EXIST, CURBS SHALL BE CONSTRUCTED BETWEEN ENDS OF LOCAL DEPRESSION. CURB SECTION SHALL CONFORM TO THAT OF CONTROLLING AGENCY.
5. DEPRESSION SHALL BE CLASS "B" CONCRETE

REGISTERED PROFESSIONAL ENGINEER
WARREN D. WILLIAMS
No. 32336
Exp. 12-31-04
CIVIL
STATE OF CALIFORNIA

RIVERSIDE COUNTY FLOOD CONTROL AND WATER CONSERVATION DISTRICT

APPROVED BY:

CHIEF ENGINEER

DATE: April 5, 2004

R.C.E. NO. 32336

LOCAL DEPRESSION NO. 3

STANDARD DRAWING NUMBER LD202

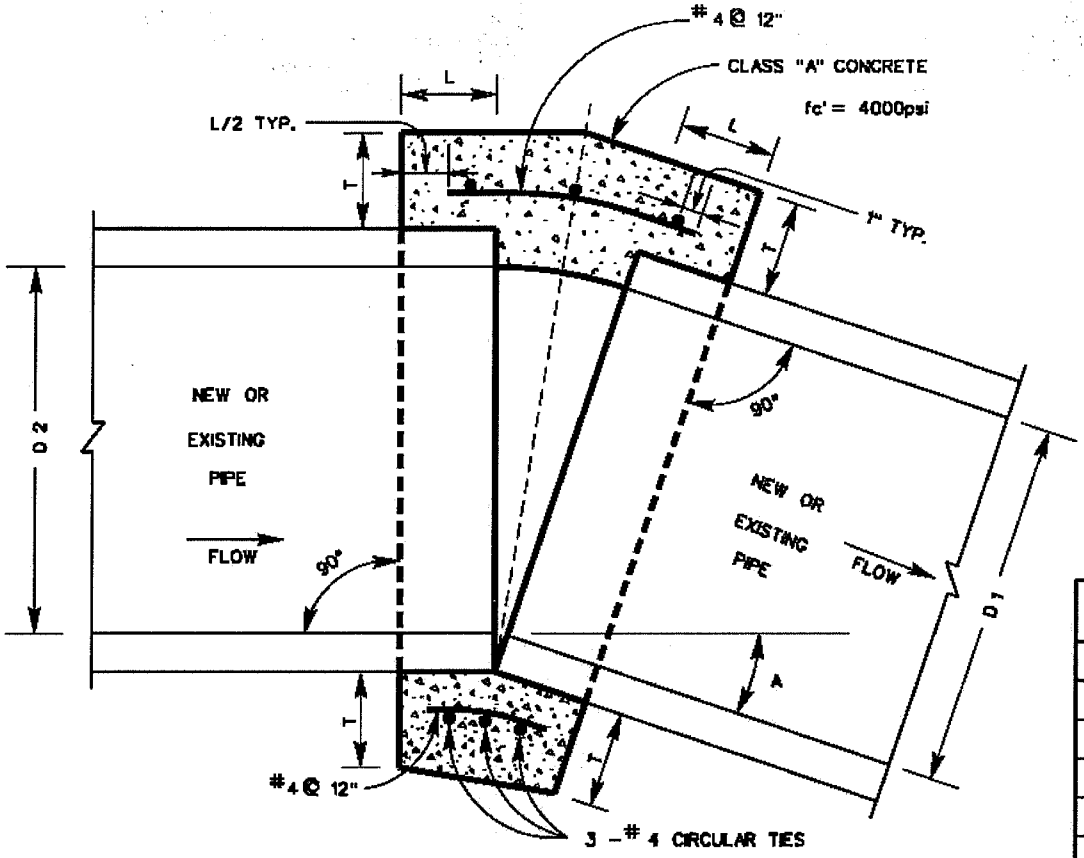

D	L	T
12"	1.0'	4"
18"	1.0'	5"
24"	1.0'	6"
36"	1.5'	8"
48"	1.5'	10"
57"	1.5'	10"
60"	1.75'	11"
66"	1.75'	11"

NOTES

1. A CONCRETE COLLAR IS REQUIRED WHERE THE CHANGE IN GRADE EXCEEDS 0.10 FT. PER FOOT, OR IF CHANGE IN ALIGNMENT EXCEEDS 0.10 FT. PER FOOT.
2. IF THE EXTREME ENDS OF THE PIPE LEAVE A CLEAR SPACE THAT IS GREATER THAN 1", BUT LESS THAN 6", A CONCRETE COLLAR IS REQUIRED (SEE DETAIL A THIS SHEET). IF THE CLEAR SPACE IS 6" OR GREATER, A TRANSITION STRUCTURE IS REQUIRED.
3. CONCRETE COLLAR SHALL NOT BE USED FOR A SIZE CHANGE ON THE MAIN LINE.
4. WHERE PIPES OF DIFFERENT DIAMETERS ARE JOINED WITH A CONCRETE COLLAR, L AND T SHALL BE THOSE OF THE LARGER PIPE. $D=D_1$ OR D_2, WHICHEVER IS GREATER.
5. FOR PIPE LARGER THAN 66" A SPECIAL COLLAR DETAIL IS REQUIRED.
6. FOR PIPE SIZE NOT LISTED USE THE NEXT SIZE LARGER.
7. OMIT REINFORCING ON PIPES 24" AND LESS IN DIAMETER AND ON ALL PIPES WHERE ANGLE A IS LESS THAN 10°.
8. WHERE REINFORCING IS REQUIRED THE DIAMETER OF THE CIRCULAR TIES SHALL BE D + (2 X WALL THICKNESS) + 8".
9. WHEN D_1 IS EQUAL TO OR LESS THAN D_2 JOIN INVERTS AND WHEN D_1 IS GREATER THAN D_2 JOIN SOFFITS.
10. PIPE MAY BE CORRUGATED METAL PIPE, CONCRETE PIPE, OR REINFORCED CONCRETE PIPE.

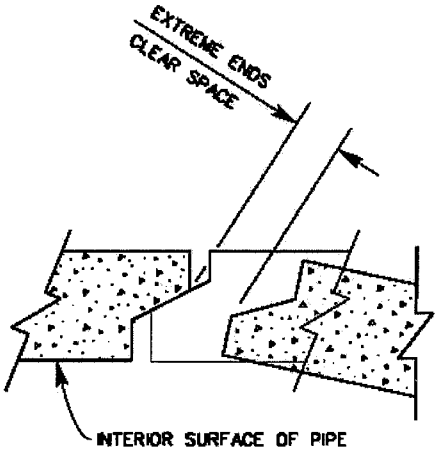

DETAIL "A"
TYPICAL JOINT FOR REINFORCED CONCRETE PIPE

APWA STD. PLAN 380-1
L.A.C.F.C. 2-0393

REGISTERED PROFESSIONAL ENGINEER WARREN D. WILLIAMS No. 32336 Exp. 12-31-04 CIVIL STATE OF CALIFORNIA

RIVERSIDE COUNTY FLOOD CONTROL AND WATER CONSERVATION DISTRICT
APPROVED BY: CHIEF ENGINEER
DATE: April 5, 2004 R.C.E. NO. 32336

CONCRETE COLLAR FOR PIPE 12 INCHES THROUGH 66 INCHES
STANDARD DRAWING NUMBER M803

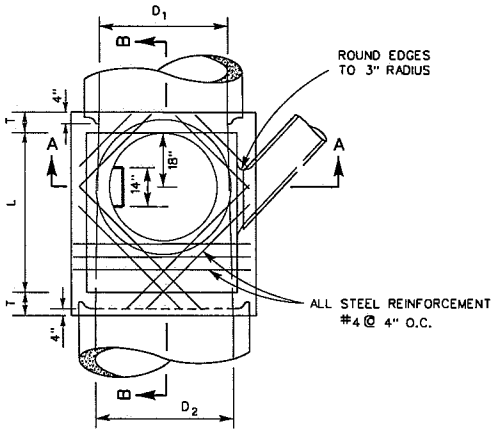

PLAN
(SHAFT NOT SHOWN)

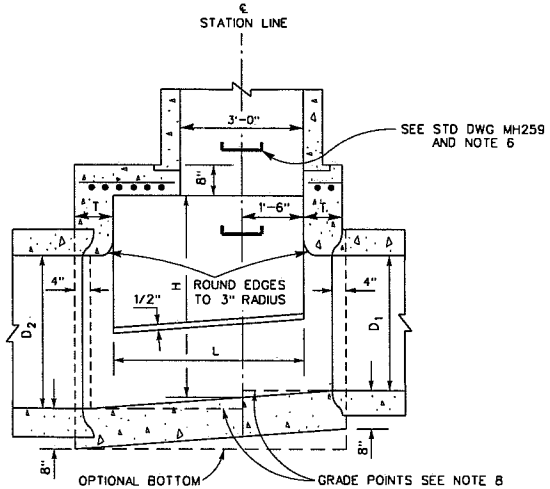

SECTION B-B

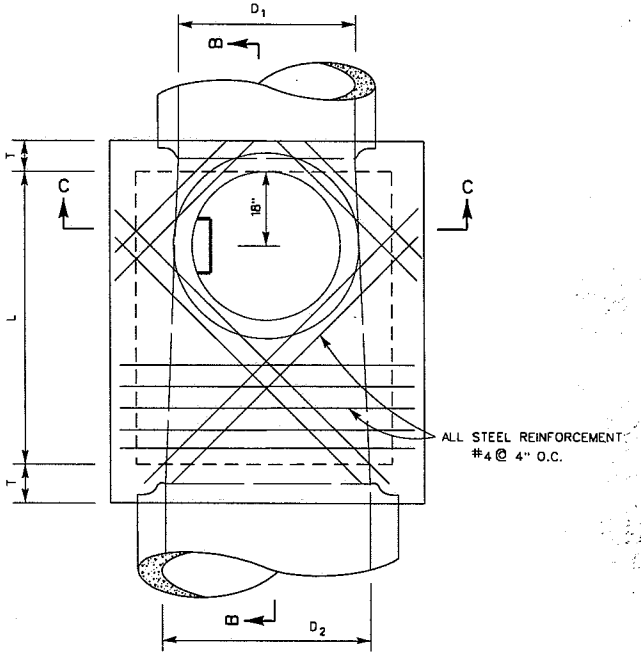

DETAIL N PLAN
(SHAFT NOT SHOWN, SEE NOTE 3)

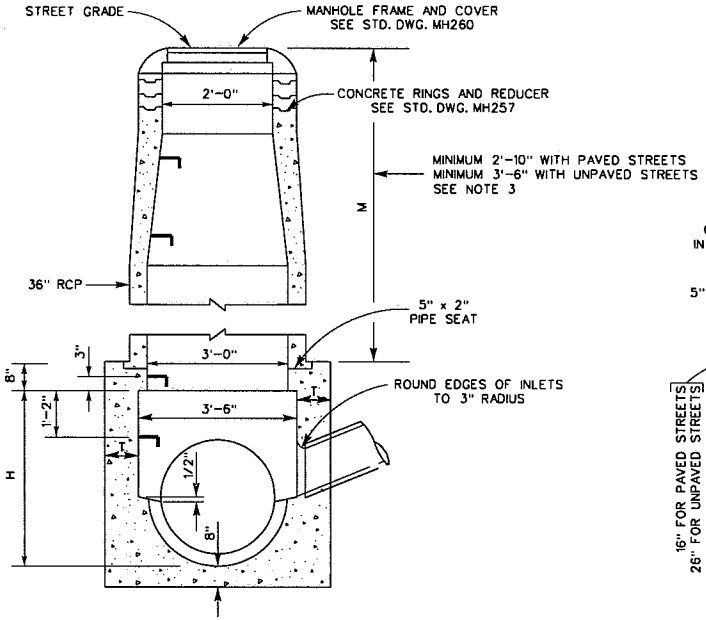

SECTION A-A

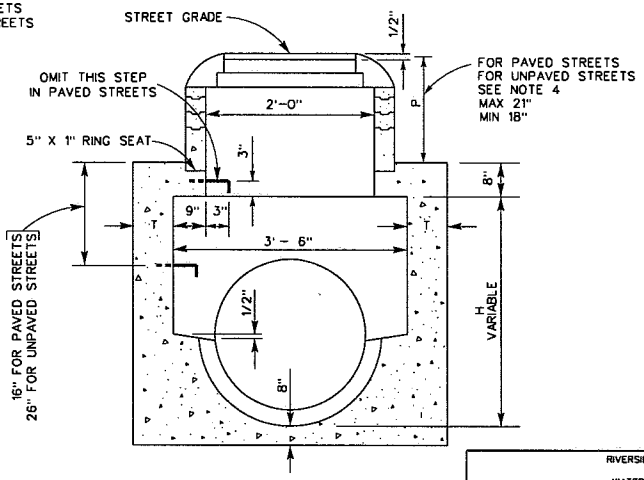

SECTION C-C

RIVERSIDE COUNTY FLOOD CONTROL AND WATER CONSERVATION DISTRICT		
RECOMMENDED FOR APPROVAL BY: CHIEF, DESIGN & CONSTRUCTION	APPROVED BY: CHIEF ENGINEER	MANHOLE NO. 1
DATE: JANUARY 2011 R.E. No. 44684	DATE: JANUARY 2011 R.C.E. NO. 32335	STANDARD DRAWING NUMBER MH251 SHEET 1 OF 2

NOTES

1. HEIGHT H SHALL BE NOT LESS THAN 4'-0" BUT MAY BE INCREASED AT OPTION OF CONTRACTOR PROVIDED THAT THE VALUE OF M SHALL NOT BE LESS THAN THE MINIMUM SPECIFIED AND THAT THE REDUCER SHALL BE USED. FOR H (IN SEC. C-C) SEE NOTE 4.

2. LENGTH L SHALL BE 4' UNLESS OTHERWISE SHOWN ON IMPROVEMENT PLAN. L MAY BE INCREASED OR LOCATION OF MANHOLE SHIFTED TO MEET PIPE ENDS, AT THE OPTION OF CONTRACTOR, EXCEPT THAT ANY CHANGE IN LOCATION OF MANHOLE MUST BE APPROVED BY THE ENGINEER.

3. SHAFT SHALL BE CONSTRUCTED AS PER SECTION C-C AND DETAIL N WHEN DEPTH M FROM STREET GRADE TO TOP OF BOX IS LESS THAN 2'-10 1/2" FOR PAVED STREETS OR 3'-6" FOR UNPAVED STREETS.

4. DEPTH P MAY BE REDUCED TO AN ABSOLUTE LIMIT OF 6" WHEN LARGER VALUES OF P WOULD REDUCE H (IN SECTION C-C) TO BE 3'-6" OR LESS.

5. T SHALL BE 8" FOR VALUES OF H UP TO AND INCLUDING 8'.
   T SHALL BE 10" FOR VALUES OF H OVER 8'.

6. STEPS SHALL BE 3/4" ROUND, GALVANIZED STEEL AND ANCHORED NOT LESS THAN 4" IN THE WALLS OF STRUCTURES. UNLESS OTHERWISE SHOWN, STEPS SHALL BE SPACED 16" ON CENTER. THE LOWEST STEP SHALL BE NOT MORE THAN 2' ABOVE THE INVERT.

7. REINFORCING STEEL SHALL BE ROUND, DEFORMED, BARS, NO. 4 AND 1 1/2" CLEAR FROM INSIDE FACE OF CONCRETE.

8. STATIONS REFER TO PLAN AND PROFILE SHEETS. ELEVATIONS AT ℄ AND PROLONGED INVERT GRADE LINE. SEE NOTE 2 FOR SHIFTING LOCATION.

9. RINGS, REDUCER AND PIPE FOR ACCESS SHAFT SHALL BE SEATED IN CEMENT MORTAR AND NEATLY POINTED OR WIPED INSIDE SHAFT.

10. FLOOR OF MANHOLE SHALL BE STEEL TROWELED TO SPRINGLINE.

11. CONCRETE SHALL BE CLASS "A".

12. WHERE PRESSURE MANHOLE NO. 1 IS SPECIFIED ON PLANS SEE STD DWG MH256 AND MH258.

RIVERSIDE COUNTY FLOOD CONTROL AND WATER CONSERVATION DISTRICT		MANHOLE NO. 1
RECOMMENDED FOR APPROVAL BY: CHIEF, DESIGN & CONSTRUCTION	APPROVED BY: CHIEF ENGINEER	STANDARD DRAWING NUMBER MH251
DATE: JANUARY 2011 R.E. No. 44684	DATE: JANUARY 2011 R.C.E. NO. 32336	SHEET 2 OF 2

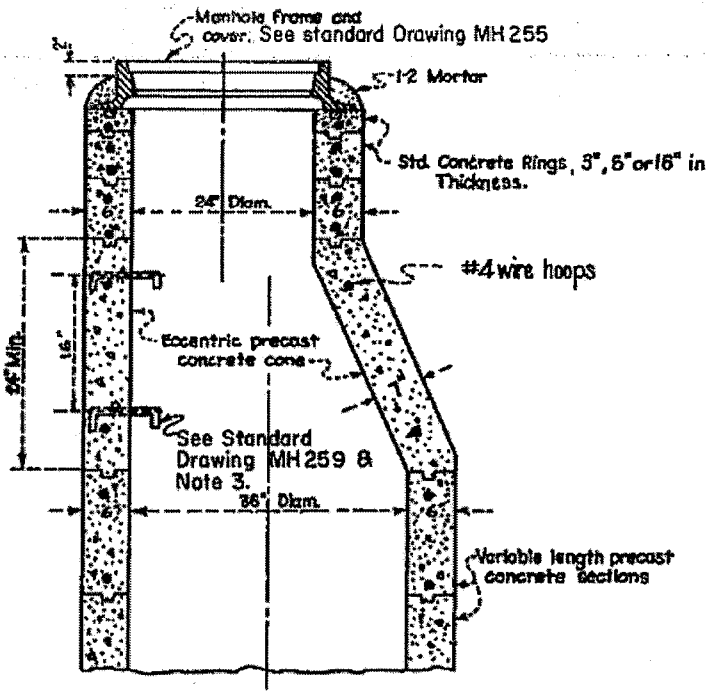

VERTICAL SECTION OF PLAIN CONCRETE ECCENTRIC MANHOLE SHAFT

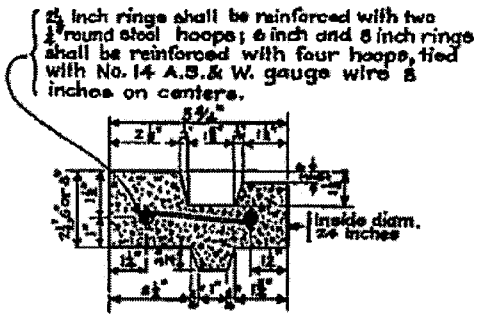

CROSS SECTION OF REINFORCED CONCRETE RING

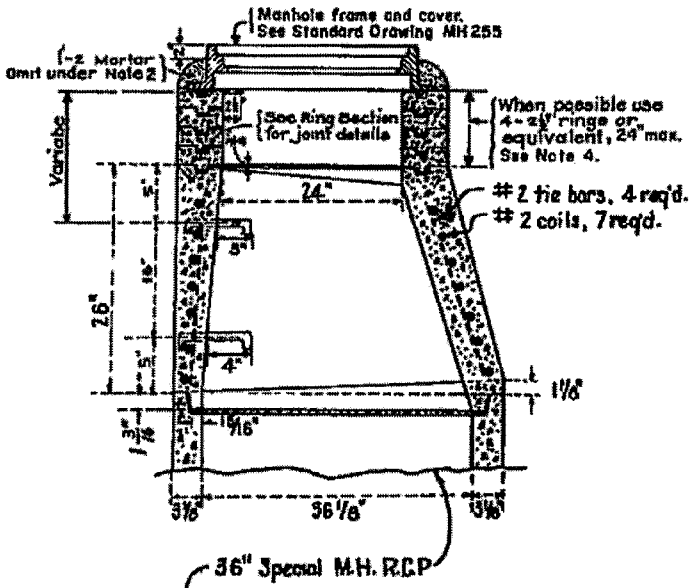

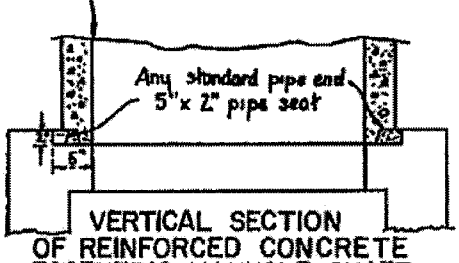

VERTICAL SECTION OF REINFORCED CONCRETE ECCENTRIC MANHOLE SHAFT

NOTES

1. ALL JOINTS shall be filled with 1-2 mortar and neatly pointed or wiped on inside of shaft.
2. COLLAR of 1-2 mortar around cover frame shall be omitted in rock and oil streets and in paved streets.
3. STEPS shall be ¾ inch round galvanized steel. Top step shall be placed directly beneath the manhole cover frame.

   Width of all steps shall be 14 inches between leg centers. Except where shown otherwise, spacing of steps in shaft shall be 16 inches on center.
4. ECCENTRIC MANHOLE shaft, reducer, and rings may be plain concrete. For unreinforced sections, the minimum thickness shall be 6 inches. The concrete used shall be *Class "A"*.

REGISTERED PROFESSIONAL ENGINEER WARREN D. WILLIAMS No. 32338 Exp. 12-31-04 CIVIL STATE OF CALIFORNIA

RIVERSIDE COUNTY FLOOD CONTROL AND WATER CONSERVATION DISTRICT

APPROVED BY: _____
CHIEF ENGINEER

DATE: April 5, 2004 R.C.E. NO. 32338

MANHOLE SHAFT FOR CAST PIPE

STANDARD DRAWING NUMBER MH257

L.A.C.F.C.D. STD. No. 2-D107

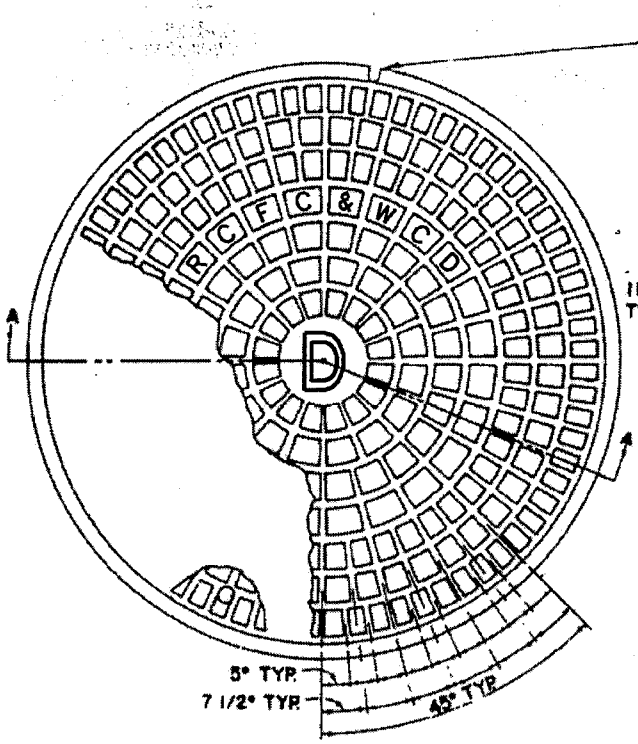

COVER FOR 24" CLEAR OPENING FRAME

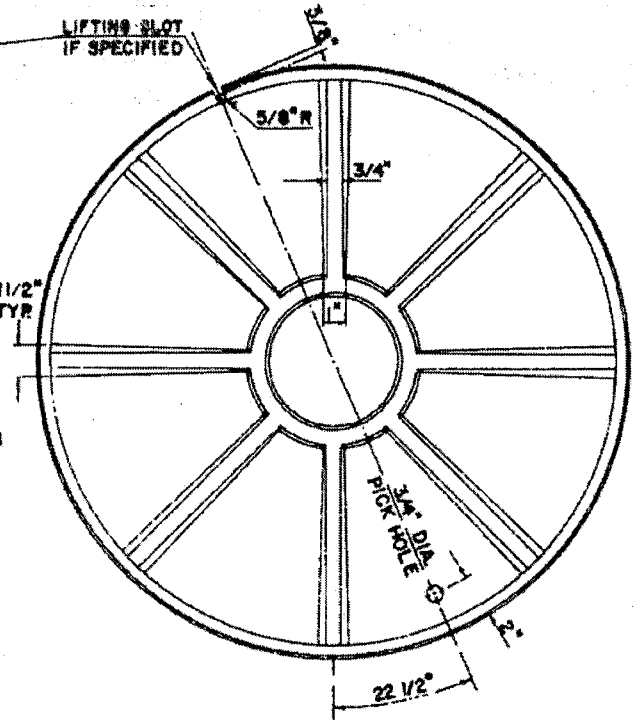

BOTTOM PLAN OF COVER

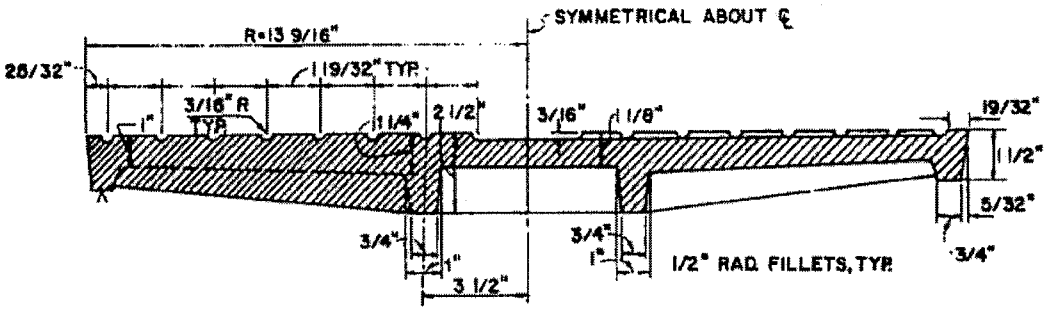

SECTION A-A

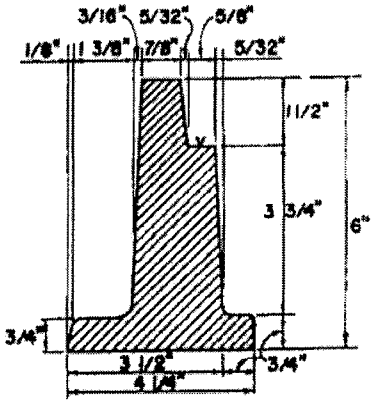

DETAIL OF FRAME

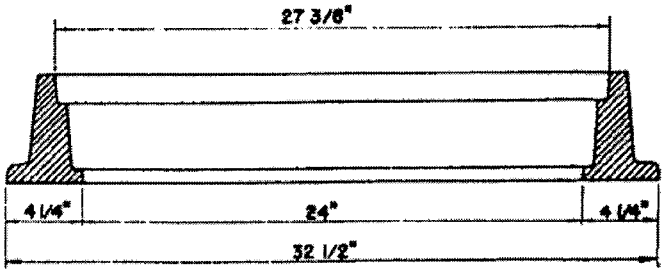

SECTION THRU FRAME

APWA STD PLAN 630-1

REGISTERED PROFESSIONAL ENGINEER
WARREN D. WILLIAMS
No. 32336
Exp. 12-31-04
CIVIL
STATE OF CALIFORNIA

RIVERSIDE COUNTY FLOOD CONTROL AND WATER CONSERVATION DISTRICT APPROVED BY: CHIEF ENGINEER DATE: April 5, 2004 R.C.E. NO. 32336	24-INCH MANHOLE FRAME AND COVER STANDARD DRAWING NUMBER MH260 SHEET 1 OF 2

NOTES:

1. THE CAST IRON USED SHALL CONFORM WITH ASTM A-48 CLASS 35B.
2. THE FRAME AND COVER SHALL BE COATED WITH ASPHALTUM OR BITUMINOUS PAINT AFTER TESTING AND INSPECTION.
3. COVERS SHALL BE CAST WITH THE LETTERS "D" AND "RCFC&WCD". THE LETTER "D" SHALL BE APPROXIMATELY 2 1/2 INCHES HIGH WITH 1/2-INCH LINE WIDTH AND PLACED IN THE CENTER OF THE COVER. ALL LETTERS SHALL BE FLUSH WITH THE FINISHED SURFACE OF THE COVER.
4. FOUNDRY IDENTIFYING MARK, HEAT AND DATE SHALL BE CAST ON THE BOTTOM OF THE COVER AND ON THE INSIDE OF THE FRAME.
5. IMPORTED COVERS AND FRAMES SHALL HAVE THE COUNTRY OF ORIGIN MARKING IN COMPLIANCE WITH FEDERAL REGULATIONS.
6. WEIGHT OF FRAME SHALL BE 265 POUNDS. WEIGHT OF COVER SHALL BE 175 POUNDS. ACTUAL WEIGHTS SHALL BE WITHIN A RANGE OF 95% TO 110%.
7. THE MANHOLE FRAME AND COVER SHALL BE INSPECTED BY THE ENGINEER PRIOR TO SHIPMENT TO THE JOB SITE. ACCEPTANCE WILL BE INDICATED BY THE AGENCY'S MARK.
8. THE PROOF-LOAD FOR TEST METHOD B OF THE STANDARD SPECIFICATIONS IS 40,700 POUNDS.
9. COVERS FOR MANHOLES LOCATED IN EASEMENTS, ALLEYS, PARKWAYS AND ALL OTHER PLACES EXCEPT PAVED STREETS SHALL BE PROVIDED WITH SOCKET SET SCREW LOCKING DEVICES. DRILL AND TAP TWO HOLES TO A DEPTH OF ONE INCH AT 90 DEGREES TO PICK HOLE AND INSTALL ¾-INCH X ¾-INCH STAINLESS STEEL SOCKET SET SCREWS WITH ⅜-INCH RECESSED HEX HEAD. ALL THREADS SHALL BE N.C.

APWA STD PLAN 630-1

REGISTERED PROFESSIONAL ENGINEER
WARREN D. WILLIAMS
No. 32336
Exp. 12-31-04
CIVIL
STATE OF CALIFORNIA

RIVERSIDE COUNTY FLOOD CONTROL AND WATER CONSERVATION DISTRICT

APPROVED BY:

CHIEF ENGINEER

DATE: April 5, 2004 R.C.E. NO. 32336

24-INCH MANHOLE FRAME AND COVER

STANDARD DRAWING NUMBER MH260
SHEET 2 OF 2

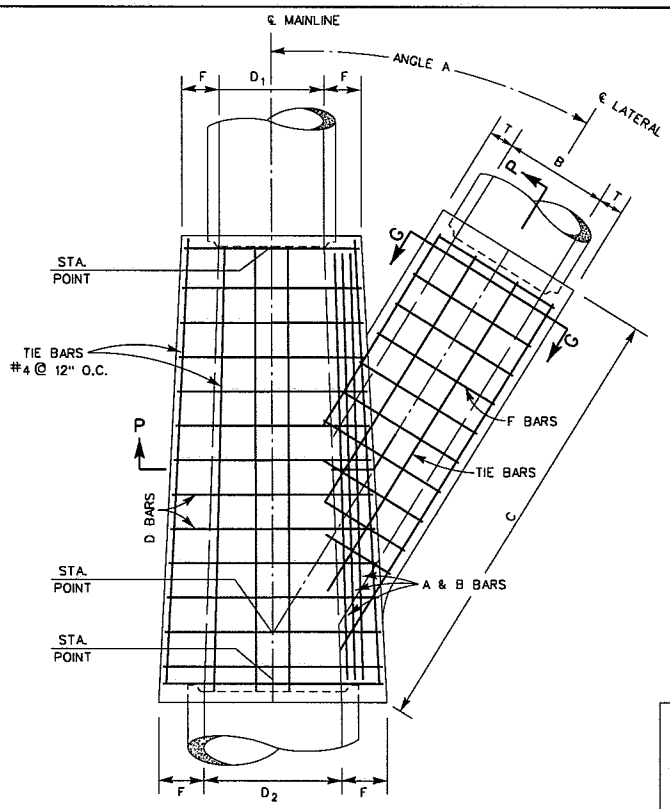

PLAN

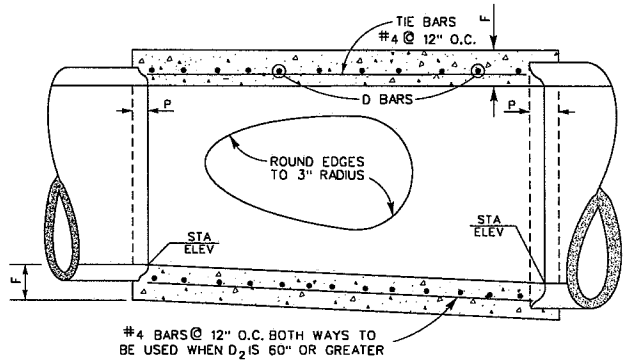

LONGITUDINAL SECTION

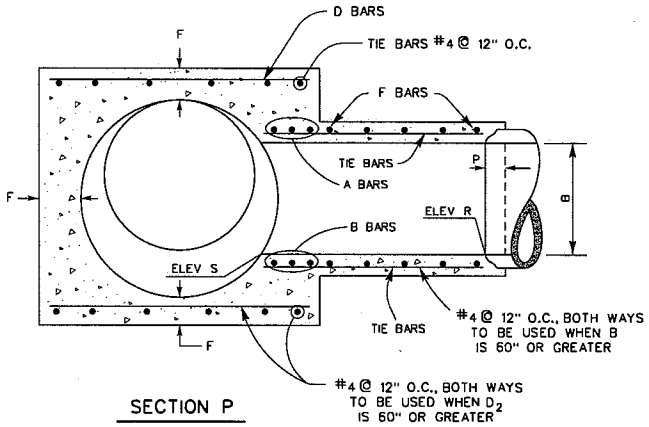

SECTION P

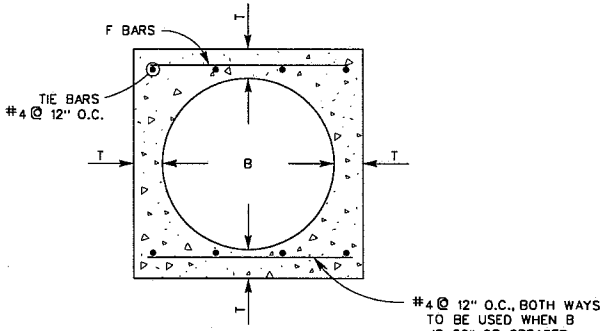

SECTION G

TABLE

×D2, D1, OR B	F OR T	A OR B BARS	D OR F BARS	P
12	4	#5 @ 3" O.C.	#4 @ 6" O.C.	5"
18	4 1/2			
24	5 1/4			
30	6			
36	6 1/2			
42	7 1/2	#6 @ 3" O.C.	#5 @ 6" O.C.	
48	8			
54	9			
60	9 1/2			
66	10 1/4			
72	11			
84	12 1/2			
90	13 1/4	#7 @ 3" O.C.	#6 @ 6" O.C.	
96	14			
102	15 1/2			8"
108	16			
114	16 1/2			
120	17			
126	17			
132	17 1/2			
138	17 1/2			
144	18			

× USE D2, OR D1, WHICHEVER IS GREATER, OR B

NOTES

1. NUMBER OF A&B BARS SHOWN IS REPRESENTATIONAL. SEE TABLE FOR SPACING & BAR COUNT.
2. VALUES FOR A, B, C, D1, D2, ELEV. R AND ELEV. S ARE SHOWN ON IMPROVEMENT PLAN. LENGTH OF THE STRUCTURE MAY BE INCREASED TO MEET PIPE ENDS USING D BARS IN EXTENDED PORTION OF SAME DIMENSION AND SPACING AS SPECIFIED.
3. CONCRETE SHALL BE CLASS "A". FLOOR OF THE STRUCTURE SHALL BE STEEL-TROWELED TO SPRING LINE. STRUCTURE SHALL BE POURED IN ONE CONTINUOUS OPERATION, EXCEPT THAT THE CONTRACTOR SHALL HAVE THE OPTION OF PLACING AT THE SPRING LINE A CONSTRUCTION JOINT WITH A LONGITUDINAL KEYWAY.
4. REINFORCING STEEL CLEAR COVER SHALL BE 1½" ON INSIDE. TIE BARS SHALL BE NO.4 AND SPACED 12" C/C.
5. WHEN DIMENSION "C" IS NOT SPECIFIED THE SPUR SHALL NOT BE CONSTRUCTED AND A & B BARS SHALL BE OMITTED.
6. THE MAXIMUM COVER ABOVE THIS STRUCTURE SHALL BE 25'. IF THE COVER EXCEEDS 25', A SPECIAL STRUCTURE SHALL BE DESIGNED FOR THE COVER AND DETAILED ON THE PROJECT DRAWINGS.

RIVERSIDE COUNTY FLOOD CONTROL AND WATER CONSERVATION DISTRICT

RECOMMENDED FOR APPROVAL BY: CHIEF, DESIGN & CONSTRUCTION
DATE: JANUARY 2011 R.E. No. 44664

APPROVED BY: CHIEF ENGINEER
DATE: JANUARY 2011 R.C.E. NO. 32338

TRANSITION STRUCTURE NO. 3

STANDARD DRAWING NUMBER TS303

APPENDIX F

CERTIFIED PAYROLL FORM

California Department of Industrial Relations

PUBLIC WORKS PAYROLL REPORTING FORM

Page _____ of _____

NAME OF CONTRACTOR:
OR SUBCONTRACTOR:

CONTRACTOR'S LICENSE NO.:
SPECIALITY LICENSE NO.:

ADDRESS:

PAYROLL NO.:

FOR WEEK ENDING:

SELF-INSURED CERTIFICATE NO.:
WORKERS' COMPENSATION POLICY NO.:

PROJECT OR CONTRACT NO.:
PROJECT AND LOCATION:

(1) NAME, ADDRESS AND SOCIAL SECURITY NUMBER OF EMPLOYEE	(2) NO. OF WITH-HOLDING EXEMPTIONS	(3) WORK CLASSIFICATION	(4) DAY	M	T	W	TH	F	S	S	(5) TOTAL HOURS	(6) HOURLY RATE OF PAY	(7) GROSS AMOUNT EARNED		(8) DEDUCTIONS, CONTRIBUTIONS AND PAYMENTS							(9) NET WGS PAID FOR WEEK	CHECK NO.
				DATE																			
				HOURS WORKED EACH DAY																			
			S										THIS PROJECT	ALL PROJECTS	FED. TAX	FICA (SOC. SEC.)	STATE TAX	SDI	VAC/ HOLIDAY	HEALTH & WELF.	PENSION		
			O												TRAING.	FUND ADMIN	DUES	TRAV/ SUBS.	SAVINGS	OTHER*	TOTAL DEDUC-TIONS		
			S										THIS PROJECT	ALL PROJECTS	FED. TAX	FICA (SOC. SEC.)	STATE TAX	SDI	VAC/ HOLIDAY	HEALTH & WELF.	PENSION		
			O												TRAING.	FUND ADMIN	DUES	TRAV/ SUBS.	SAVINGS	OTHER*	TOTAL DEDUC-TIONS		
			S										THIS PROJECT	ALL PROJECTS	FED. TAX	FICA (SOC. SEC.)	STATE TAX	SDI	VAC/ HOLIDAY	HEALTH & WELF.	PENSION		
			O												TRAING.	FUND ADMIN	DUES	TRAV/ SUBS.	SAVINGS	OTHER*	TOTAL DEDUC-TIONS		
			S										THIS PROJECT	ALL PROJECTS	FED. TAX	FICA (SOC. SEC.)	STATE TAX	SDI	VAC/ HOLIDAY	HEALTH & WELF.	PENSION		
			O												TRAING.	FUND ADMIN	DUES	TRAV/ SUBS.	SAVINGS	OTHER*	TOTAL DEDUC-TIONS		

Form A-1-131 (New 2-80)

S = STRAIGHT TIME
O = OVERTIME
SDI = STATE DISABILITY INSURANCE

*OTHER – Any other deductions, contributions and/or payments whether or not included or required by prevailing wage determinations must be separately listed. Use extra sheet(s) if necessary

CERTIFICATION MUST be completed
(See reverse side)

NOTICE TO PUBLIC ENTITY

For Privacy Considerations

Fold back along dotted line prior to copying for release to general public (private persons).

(Paper Size then 8-1/2 x 11 inches)

- -

I, _____, the undersigned, am the
(Name – print)

_____ with the authority to act for and on behalf of
(Position in business)

_____, certify under penalty of perjury
(Name of business and/or contractor)

that the records or copies thereof submitted and consisting of _____
(Description, number of pages)

are the originals or true, full, and correct copies of the originals which depict the payroll record(s) of the actual disbursements by way of cash, check, or whatever form to the individual or individuals named.

Date: _____ Signature: _____

A public entity may require a stricter and/or more extensive form of certification.

STATE OF CALIFORNIA • DEPARTMENT OF TRANSPORTATION

STATEMENT OF COMPLIANCE

CEM-2503 (REV 8/1996)

CONTRACTOR/SUBCONTRACTOR	CONTRACT NUMBER
FIRST DAY AND DATE OF PAY PERIOD	LAST DAY AND DATE OF PAY PERIOD

I do hereby certify under penalty of perjury:

(1) That I pay or supervise payment to employees of the above-referenced contractor on the above-referenced contract. All persons employed on said project for the above-referenced time period have been paid their full weekly wages earned, that no rebates have been or will be made either directly or indirectly to or on behalf of said contractor from the full weekly wages earned by any person and that no deductions have been made either directly or indirectly from the full wages earned by any person other than permissible deductions.

(2) That any payrolls otherwise under this control required to be submitted for the above period are correct and complete; that the wage rates for laborers or mechanics contained therein are not less that the applicable wages rates:

(a) ☐ Specified in the applicable wage determination incorporated into the contract;

(b) ☐ Determined by the Director of Industrial Relations for the county or counties in which the work is performed; that the classification set forth therein for each laborer or mechanic conform with the work he or she performed.

(3) That any apprentices employed in the above period are duly registered in a bona fide apprenticeship program registered with a State apprenticeship agency.

(4) That fringe benefits as listed in the contract:

(a) ☐ Have been or will be paid to the approved plan(s), fund(s), or program(s) for the benefit of listed employee(s), except as noted below.

(b) ☐ Have been paid directly to the listed employee(s), except as noted below.

(c) ☐ See exceptions noted below.

[redacted]	[redacted]

REMARKS:

NAME (PLEASE PRINT.)	TITLE
SIGNATURE	DATE

On federally-funded projects, permissible deductions are defined in title 29, Code of Federal Regulations, part 3, issued by the Secretary of Labor under the Copeland Act, (40 U. S. C. 276c).

Also, the willful falsification of any of the above statements may subject the contractor or subcontractor to civil or criminal prosecution (See section 1001 of title 18 and section 3729 of title 31 of the United States Code).

ADA Notice For individuals with sensory disabilities, this document is available in alternate formats. For information call (916) 654-6410 or TDD (916) 654-3880 or write Records and Forms Management, 1120 N Street, MS-89, Sacramento, CA 95814.

STATE OF CALIFORNIA • DEPARTMENT OF TRANSPORTATION

STATEMENT OF COMPLIANCE

CEM-2503 (REV 8/96) INSTRUCTIONS

This statement of compliance meets needs of the state and federal payroll requirements to pay fringe benefits in addition to payment of the minimum rates. The contractor's obligation to pay fringe benefits may be met by payment of the fringes to the various preapproved plans, funds, or programs or by making these payments directly to the employees as part of their weekly wage payments.

The contractor must **show on the face of his or her payroll all monies paid to the employees** whether as basic rates or total hourly wage amount in lieu of fringes. The contractor shall report in the statement of compliance that **he or she is paying to others** fringes required by the contract and not paid directly to the employees in lieu of fringes.

Detailed instructions follow:

Contractors required to pay Federal Wage Rates:

Such a contractor shall check paragraph 2(a) of the statement to indicate that the wage rates for laborers or mechanics contained in the payroll are not less than the applicable wage rates specified in the applicable wage determination incorporated into the contract.

Contractors required to pay the State Prevailing Wage Rates as determined by the Director of Industrial Relations:

Such a contractor shall check paragraph 2(b) of the statement to indicate that the wage rates for laborers or mechanics contained in the payroll are not less than the applicable wage rates determined by the Director of Industrial Relations for the county or counties in which the work is preformed.

Contractor who pay all required fringe benefits:

A contractor who pays fringe benefits to approved plans, funds, or programs in amounts not less than were determined in the applicable wage decisions shall continue to show on the face of his or her payroll the basic hourly rate and overtime rate paid to his or her employees, just as he or she has always done. Such a contractor shall check paragraph 4(a) of the statement to indicate that he or she is also paying approved plans, funds, or programs within the times required for the receipt of those sums, not less than the amount predetermined as fringe benefits for each craft. Any exception shall be noted in Section 4(c).

Contractors who pay no fringe benefits:

A contractor who does not pay fringe benefits to an approved plan shall pay a like amount to the employee. This payment can be reported by inserting in the straight time hourly rate column of his or her payroll an amount not less than the predetermined rate for each classification plus the amount of fringe benefits determined for each classification in the applicable wage decision. Inasmuch as it is not necessary to pay time and a half on wages paid in lieu of fringes, the overtime rate shall be not less than one and one-half the basic predetermined rate, plus the required cash in lieu of fringes at the straight time rate. To simplify computation of overtime, it is suggested that the straight time basic rate and payment in lieu of fringes be separately stated in the hourly rate column. In addition, the contractor shall check paragraph 4(b) of the statement to indicate that he or she is paying fringe benefits directly to his or her employees. Any exceptions shall be noted in Section 4(c).

Use of Section 4(c), Exceptions:

Any contractor who is making payment to approved plans, funds, or programs in amounts less than the wage determination required is obligated to pay the deficiency directly to the employees as wages in lieu of fringes. Any exceptions to Section 4(a) and 4(b), whichever the contractor may check, shall be entered in Section 4(c). Enter in the Exception column the craft, and enter in the Explanation column the hourly amount paid the employees as wages in lieu of fringes, and the hourly amount paid to plans, funds, or programs as fringes.

STATE OF CALIFORNIA • DEPARTMENT OF TRANSPORTATION

FRINGE BENEFIT STATEMENT

CEM-2501 (REV 8/1994)

CONTRACTOR/SUBCONTRACTOR (Please Print)	CONTRACT NUMBER	FEDERAL AID PROJECT NUMBER	DATE

TO: RESIDENT ENGINEER/DISTRICT LABOR COMPLIANCE OFFICER	BUSINESS ADDRESS

The following information (as shown or referenced on wage rate determinations) paid to or on behalf of employees in various crafts or classifications is used to check payrolls or applied to force account work on the above contract.

THIS FORM MUST BE COMPLETED AND SUBMITTED WITH THE FIRST CERTIFIED PAYROLL, OR WHEN THERE HAVE BEEN ANY CHANGES.

CLASSIFICATION	FRINGE BENEFIT HOURLY AMOUNT	NAME AND ADDRESS OF PLAN, FUND, OR PROGRAM
Effective Date _____	Vacation $ _____	
_____	Health & Welfare $ _____	_____
	Pension $ _____	_____
Subsistence and/or Travel Pay:	Apprentice/ Training $ _____	_____
$ _____	Other $ _____	_____

CLASSIFICATION	FRINGE BENEFIT HOURLY AMOUNT	NAME AND ADDRESS OF PLAN, FUND, OR PROGRAM
Effective Date _____	Vacation $ _____	
_____	Health & Welfare $ _____	_____
	Pension $ _____	_____
Subsistence and/or Travel Pay:	Apprentice/ Training $ _____	_____
$ _____	Other $ _____	_____

CLASSIFICATION	FRINGE BENEFIT HOURLY AMOUNT	NAME AND ADDRESS OF PLAN, FUND, OR PROGRAM
Effective Date _____	Vacation $ _____	
_____	Health & Welfare $ _____	_____
	Pension $ _____	_____
Subsistence and/or Travel Pay:	Apprentice/ Training $ _____	_____
$ _____	Other $ _____	_____

I certify under penalty of perjury that fringe benefits are paid to the approved Plans, Funds, or Programs as listed above.

NAME AND TITLE (Please Print)

SIGNATURE	BUSINESS TELEPHONE NUMBER

ADA Notice For individuals with sensory disabilities, this document is available in alternate formats. For information call (916) 654-6410 or TDD (916) 654-3880 or write Records and Forms Management, 1120 N Street, MS-89, Sacramento, CA 95814.

STATE OF CALIFORNIA • DEPARTMENT OF TRANSPORTATION

EMPLOYEE INTERVIEW: LABOR COMPLIANCE / EEO

CEM 2504 (REV 6/1999) (Front) CT #7541-3512-3

ADA Notice

For individuals with sensory disabilities, this document is available in alternate formats. For information call (916) 654-6410 or TDD (916) 654-3880 or write Records and Forms Management, 1120 N Street, MS-89, Sacramento, CA 95814.

CONFIDENTIAL

This document contains personal information and pursuant to Civil Code 1798.21 it shall be kept confidential in order to protect against unauthorized disclosure.

INSTRUCTIONS - (SEE REVERSE SIDE)

CONTRACT NO

FED. NO.

1. TO BE FILLED IN BY INTERVIEWER ***(Data may be obtained from payroll records or during source document review)***

EMPLOYEE NAME		LABOR CLASSIFICATION
MINIMUM BASE WAGE PER CONTRACT:	BASE RATE	FRINGE BENEFITS
MINIMUM BASE WAGE PER CONTRACT:	BASE RATE	FRINGE BENEFITS
EMPLOYER		PRIME CONTRACTOR ON THE PROJECT *(IF SAME, SO STATE)*

WORK BEING PERFORMED AT TIME OF INTERVIEW

2. QUESTIONS TO BE ASKED OF EMPLOYEE

A. HOW LONG HAVE YOU WORKED FOR YOUR PRESENT EMPLOYER? | HOW LONG ON THIS PROJECT?

B. DESCRIBE THE TYPE OF WORK YOU HAVE BEEN DOING THIS PAST WEEK

C. WHAT IS YOUR WAGE *[Include Base and Fringe Benefits (Compare to Payroll)]* | DO YOU KEEP A RECORD OF THE HOURS YOU WORK? ☐ YES ☐ NO

D. DO YOU WORK OVERTIME? ☐ FREQUENTLY ☐ SELDOM ☐ NONE | ARE YOU PAID TIME AND ONE-HALF FOR OVERTIME? ☐ YES ☐ NO | IF NO, EXPLAIN

E. HAS YOUR EMPLOYER DIRECTED YOUR ATTENTION TO THE REQUIRED WAGE RATE POSTERS ON THE PROJECT? ☐ YES ☐ NO | HAVE YOU SEEN THOSE POSTERS? ☐ YES ☐ NO | IF NO, EXPLAIN

F. ARE YOU AWARE OF THE CONTRACTOR'S EEO POLICIES? ☐ YES ☐ NO | DOES THE CONTRACTOR HOLD REGULAR EEO MEETINGS? ☐ YES ☐ NO | HOW OFTEN?

WHO CONDUCTS THE MEETINGS? | WHO IS THE EEO OFFICER FOR YOUR EMPLOYER? | WHO IS THE EEO OFFICER FOR THE PROJECT?

G. ARE YOU INTERESTED IN / OR HAS YOUR EMPLOYER INFORMED YOU OF UPGRADING AND TRAINING POSSIBILITIES? ☐ YES ☐ NO | IF YES, PLEASE EXPLAIN

3. ADDITIONAL QUESTIONS FOR OWNER OPERATORS

A. EQUIPMENT DESCRIPTION | TRUCK LICENCE NO. | TRUCK CA #

HOURLY RATE *(Fully operated and maintained)* $ | BASE EQUIPMENT RATE $ | ON WHAT DO YOU BASE YOUR EQUIPMENT RENTAL RATE? ☐ HOURLY ☐ WEEKLY ☐ MONTHLY

B. DO YOU OWN THE EQUIPMENT? ☐ YES ☐ NO | MAY I SEE YOUR CERTIFICATE OF OWNERSHIP? *(Interviewer Note Response)*

LEGAL OWNER | REGISTERED OWNER

4. EMPLOYEE COMMENTS

DO YOU HAVE ANY COMMENTS OR COMPLAINTS ABOUT WAGES OR EEO POLICIES? BE SPECIFIC:

5. INTERVIEWER'S COMMENTS

NAME OF INTERVIEWER (PRINT) | DATE

SIGNATURE OF INTERVIEWER

NAME OF RESIDENT ENGINEER (PRINT) | DATE

SIGNATURE OF RESIDENT ENGINEER

EMPLOYEE INTERVIEW: LABOR COMPLIANCE / EEO

CEM 2504 (REV 6/1999) (Back) CT #7541-3512-3

DIRECTIONS TO INTERVIEWER

1. ***Fill in Section 1 from payroll records, if available, after interview.***
2. ***Fill in Section 2 completely. (does not apply to owner operators)***
3. ***Fill in Section 3 completely.***
4. ***Employee comments optional in Section 4.***
5. ***Interviewer comments on findings and recommends further actions to be taken. Attach additional sheets if necessary.***

Monthly Employment Utilization Report

U.S. Department of Labor

Employment Standards Administration - Office of Federal Contract Compliance Programs

This report is required by Executive Order 11246, Sec. 203. Failure to report can result in contracts being cancelled, terminated or suspended in whole or in part and the contractor may be declared ineligible for further Government contracts of federally assisted construction contracts.

1. Covered Area (SMSA or EA): This is the covered area

2. Employers I.D. No.: 55-5555555

OMB No. 1215-01633

3. Current Goals
Minority 20%
Female 10%

4. Reporting Period
From 5/1/2006
To 5/31/2006

Name and Location of Contractor
ABC Contractors
210 Lakeview Road
Sometown, IL 99999

Federal Funding Agency
this is the funding agency.

5. CONSTRUCTION TRADE	Classifications	6. TOTAL FEDERAL & NON-FEDERAL CONSTRUCTION WORK HOURS										7. Minority Percentage	8. Female Percentage	9. Total Number of Employees		10. Total Number of Minority Employees	
		6a. Total All Employees By Trade		6b. Black (Not of Hispanic Origin)		6c. Hispanic		6d. Asian or Pacific Islander		6e. American Indian or Native American							
		M	F	M	F	M	F	M	F	M	F			M	F	M	F
Laborer	Journey Worker	40	115	0	0	0	0	0	0	0	0	0.00%	74.19%	1	1	0	0
	Apprentice	0	0	0	0	0	0	0	0	0	0			0	0	0	0
	Trainee	0	0	0	0	0	0	0	0	0	0			0	0	0	0
	Sub-Total	155		0		0		0		0				2		0	
Pipe Fitter	Journey Worker	145	80	145	0	0	0	0	0	0	0	64.44%	35.56%	2	1	2	0
	Apprentice	0	0	0	0	0	0	0	0	0	0			0	0	0	0
	Trainee	0	0	0	0	0	0	0	0	0	0			0	0	0	0
	Sub-Total	225		145		0		0		0				3		2	
Sheetmetal Worker	Journey Worker	147	0	147	0	0	0	0	0	0	0	100.00%	0.00%	2	0	2	0
	Apprentice	0	0	0	0	0	0	0	0	0	0			0	0	0	0
	Trainee	0	0	0	0	0	0	0	0	0	0			0	0	0	0
	Sub-Total	147		147		0		0		0				2		2	
Truck Driver	Journey Worker	167	0	40	0	0	0	0	0	0	0	23.95%	0.00%	2	0	1	0
	Apprentice	0	0	0	0	0	0	0	0	0	0			0	0	0	0
	Trainee	0	0	0	0	0	0	0	0	0	0			0	0	0	0
	Sub-Total	167		40		0		0		0				2		1	
	Journey Worker																
	Apprentice																
	Trainee																
	Sub-Total																
Total Journey Worker		499	195	332	0	0	0	0	0	0	0	47.84%	28.10%	3	1	2	0
Total Apprentice		0	0	0	0	0	0	0	0	0	0			0	0	0	0
Total Trainee		0	0	0	0	0	0	0	0	0	0			0	0	0	0
Grand Total		694		332		0		0		0				4		2	

11. Company Official's Signature and Title

12. Telephone Number (Include area code): (555) 555-5555

13. Date Signed

Form CC-257

APPENDIX G

SOLID WASTE DISPOSAL AND RECYCLING REPORTS

MORENO VALLEY
WHERE DREAMS SOAR

CONSTRUCTION & DEMOLITION WASTE RECYCLING FACILITIES

Riverside & San Bernardino Counties

Riverside County

Agriscape
18712 Bridge Street, Lakeview
(951) 696-0651
Accepts: Wood, Green Waste

Asphalt & Concrete Recycling
1871 Warren Road, San Jacinto
(951) 654-6869
Accepts: Asphalt, Brick, Concrete (with rebar), Dirt, Toilets

B.P. John Hauling—Romoland
28700 Matthews Road, Romoland
(951) 928-1094
Accepts: Asphalt, Brick, Concrete

Burtec Waste—Robert A. Nelson Transfer Station
1830 East Agua Mansa Road, Riverside
(951) 786-0554
Accepts: Dirt, Concrete, Fiber, Glass, Boats

Copp Materials, INC. —Prado Plant
11901 Highway 71, Corona
(951) 736-7419
Accepts: Asphalt, Clean Concrete

Geo-Engleauf Construction Specialists
5610 Market Street, Riverside
(951) 681-1332
Accepts: Asphalt, Concrete, Dirt, Rocks, Toilets

Granite Construction Company
3800 Monroe Street, Indio
(760) 775-7500
Accepts: Asphalt, Concrete

Habitat For Humanity
2121 Atlanta Boulevard, Riverside
(951) 787-6754 (x115)
Accepts: Building, Roofing, Fencing, Lighting, Furniture, Other C&D Materials

Perris Transfer Station
1706 Goetz Rd, Perris
(951) 943-1991
Accepts: *Wood*

Philadelphia Recycling Mine
12000 Philadelphia Street, Mira Loma
(951) 685-8343
Accepts: Asphalt, Brick, Concrete, Drywall, Tiles

Riverside Scrap and Iron
2993 6th Street, Riverside
(951) 686-2129
Accepts: Aluminum, Glass, Metal, Newspapers

Waste Management Transfer Station
17700 Indian Street, Moreno Valley
(951) 242-0421
Accepts: All recyclables

San Bernardino County

Apollo Wood Grinding
13303 San Bernardino Road, Fontana
(909) 356-2735
Accepts: Green, Wood Waste

Colton Iron & Metal
790 East M Street, Colton
(909) 825-1662
Accepts: Metal

Main Street Fibers
608 East Main Street, Ontario
(909) 986-6310
Accepts: Metal, Glass, Paper, Plastic

One Stop Landscape Supply
13024 San Timoteo Canyon Road, Redlands
(909) 798-1278
Accepts: Green Waste

Simsmetal America
Etiwanda
8822 Etiwanda Avenue, Rancho Cucamonga
(909) 899-1767
Accepts: Appliances, Metal

Fontana
15615 Arrow Boulevard, Fontana
(909) 823-3431
Accepts: Appliances, Metal

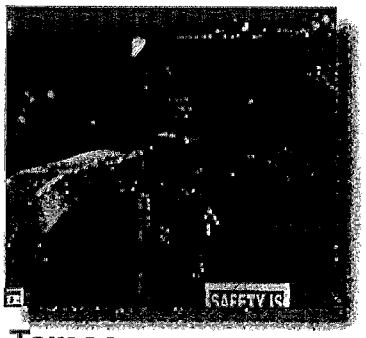

Tamco
12459 Arrow Highway, Rancho Cucamonga
(909) 899-0660
Accepts: *Metal*

This list of construction recycling facilities has been compiled as a convenience. It consists of all known facilities within Riverside and San Bernardino counties who provide C&D recycling services and weight tickets to customers. The City does not endorse any specific facility. If you would like to be added to this resource list, please contact the City's Public Works Department, Recycling Program by calling 951.413.3109.

City of Moreno Valley
PUBLIC IMPROVEMENT
MONTHLY SOLID WASTE DISPOSAL AND RECYCLING REPORT

1

Project Name:	Project Number:	Ongoing Report ☐ Final Report ☐
	Type of Work:	Report for Month/Year:
Contractor Name	Phone Number:	Fax:
Street Address	City, State, Zip	

Contractor Certification: I certify under penalty of perjury that the information provided in this form is complete and accurate.

Signature	Print Name and Title:	Date of Report:

2

*NOTE: Earth and Rock material must not be reported as either waste material diverted from or disposed to lnadfills.

NAME AND LOCATION OF RECYCLING OR DISPOSAL FACILITY (OR ENTER "REUSED" FOR MATERIALS GENERATED AND REUSED ON THIS JOB)	CHECK IF LANDFILL	CHECK IF RECYCLER	TYPE OF MATERIAL (Please enter a letter for each type on a separate line): A =Asphalt Concrete; B = Building Material C = Portland Cement Concrete; M = Metal; D = Mixed Debris; W = Wood/Cleared Vegetation; O = Other (Please Describe) See note above	TYPE OF ACTIVITY (Please enter one activity per line) 1 = Source - Separated Materials Recycling 2 = On-Site Reuse 3 = Mixed Debris Recycling 4 = Reuse of Salvageable Items 5 = Disposal at Landfill 6 = Transfer to Station 7 = Other (Please Describe)	AMOUNT TAKEN TO LANDFILL (TONS)	AMOUNT DIVERTED FROM LANDFILLS TO A RECYLCING FACILITY (TONS)	AMOUNT GENERATED AND THEN REUSED ON THIS JOB (TONS)	TOTAL (TONS)	% DIVERTED
TOTAL									

3

I have reviewed the iformaion submitted in this report for completeness.

Project Engineer (Please Print):	Phone Number:
Signature:	Date:

City of Moreno Valley

SOLID WASTE DISPOSAL AND RECYCLING REPORT - INSTRUCTIONS

Section 1: To be completed by the contractor

Project Name: Give a brief description of the project.
Type of Work: Enter a general work description, e.g. "AC Grinding" Widening, Reconstruction, Overlay
Ongoing Report: Checking this box means this is a report for a continuing project. More monthly reports will follow.
Final Report: Checking this box means this is the last report before contract acceptance.
Project Number: Enter Project Number

Report for Month/Year: The month/year for which data was collected [Note: A separate report is needed for each month].
Company Information: Contractor Name, Phone Number, Fax Number, Street Address, City, State and Zip

Contractor Certification: I certify under penalty of perjury that the information provided in this form is complete and accurate.

Contractor should verify the data entered on this form, then sign the report and print your name, title, and date.
Return this report to the project engineer by the 10th of the following month or within 15 days of final work.

Section 2: To be completed by the contractor

To count towards diversion, "solid waste" is defined as including any solid waste which would normally be disposed of at a disposal facility (PRC Section 41781 (b))

NAME AND LOCATION OF RECYCLING OR DISPOSAL FACILITY (or enter "reused" for materials generated and reused on this job)

Each address should be checked as either landfill or recycler. When using a recycling facility that exists inside a landfill, check recycler and do not check landfill. When the solid waste is generated and reused on the job, the word "Reused" should be entered in place of the address.

TYPE OF MATERIAL Please enter a number for each activity one per line:

1 = Source-Separated Materials Recycling; 2 = On-Site Reuse; 3 = Mixed Debris Recycling; 4 = Reuse of Salvageable Items; 5 = Disposal at Landfill 6 = Transfer Station; 7 = Other [Describe the activity when "Other" is selected]"

AMOUNT TAKEN TO LANDFILL (Tons): Enter the amount of any solid waste, in tons, that is generated on this project and taken to a landfill and attach copies of weight tickets.

AMOUNT DIVERTED FROM LANDFILLS TO A RECYCLING FACILITY (Tons): Enter the amount of any solid waste, in tons, that is generated on this project and taken to a recycling facility and attach copies of weight tickets.

Solid waste from this job that is used in other projects, given to other agencies (county, city etc.) or given to private individuals for reuse will be entered as taken to a recycling facility. In this case, check the activity as "Other" and describe who gets the solid waste in the row for other activity. (e.g. given to county, city or developer)

AMOUNT GENERATED AND THEN REUSED ON THIS JOB (Tons): Enter the amount of any solid waste, in tons, that is generated on this project and reused.

TOTAL (TONS) Total amount taken to landfill + amount recycled + amount reused.

% DIVERTED Total recycled + total reused + total tons x 100

These conversion factors may be found at the California Integrated Waste Management Board's (CIWMB) web site at: http://www.ciwmb.ca.gov/LGLibrary/DSG/Apndxl.htm#Conversion

Section 3: To be completed by the project engineer

I have reviewed the information submitted in this report for completeness.

Project engineer please review the report. If the form is complete, sign and print your name, phone number, and date. Discuss and resolve with the contractor any deficiency on the form.

The project engineer shall submit the completed form to the appropriate City representative by the 20th of the following month or within 30 days of final work.

City of Moreno Valley

PUBLIC IMPROVEMENT

DAILY/WEEKLY SOLID WASTE RECYCLING REPORT

Project Name: (Insert Name)

Month/Year: _____

Project No.: (Insert Number)

Type of Material: _____

Page____of _____

Contractor/Subcontractor: _____

Date		Name & Location of Recycling Facility	Tons
Monday			
Tuesday			
Wednesday			
Thursday			
Friday			
Saturday			
Week Total			

Contractor is to submit the report weekly with delivery ticket.

City of Moreno Valley
Public Improvement
DAILY/WEEKLY SOLID WASTE RECYCLING REPORT

Use your daily weight receipts to fill in the table below and submit receipts attached with this form.

Project Name: Contractor:

Project No. Subcontractor:

Month/Year:

Material	Recycled		Resused		Disposed (tons)	Total Quantity Generated	Facility Used/Destination
	Volume	Weight	Volume	Weight			
Example: Dirt 10yd³ = 18,900lbs	NA	5 tons	10yd³	9.5 tons	10 tons	24.5 tons	Recycle - Azusa Land Reclamation Reuse - on job site for grading Dispose - Puente Hills Landfill
Asphalt 1yd³ = 1,380lbs							
Brick 1yd³ = 3,024lbs							
Building Materials (ceiling tile, fixtures, etc.)							
Cardboard, paper 1yd³ = 100lbs							
Carpet/Carpet Padding 1yd³ = 84.4lbs							
Concrete 1yd³ = 1,855lbs							
Dirt 10yd³ = 18,900lbs							
Glass 1yd³ = 2,160lbs							
Green Waste 40yd³ = 4,320lbs							
Gypsum/Dry Wall 1yd³ = 3,834lbs							
Metals 1yd³ = 906lbs							
Mixed C&D (commingled, recyclable							
Plastic 1yd³ = 22.55lbs							
Rock 1yd³ = 2,570lbs							
Roofing 1yd³ = 418.5lbs							
Tile (ceramic) 1yd³ = 1,214lbs							
Wood (lumber, doors,etc.) 1yd³ = 329.5lbs							
Refuse	NA	NA	NA	NA			
Other							
Totals							

Total Recycled _____ + Total Reused _____ = _____ ÷ Total Quantity Generated _____ x 100 = _____%

APPENDIX H

DIG ALERT DELINEATION FOR UNDERGROUND SERVICE MARKINGS

DIGALERT

How to Delineate a Prospective Excavation Site

This marking guide provides for uniform marking of the area to be excavated with white paint in paved surfaces, or in unpaved areas with other suitable markings such as stakes or flags.

White Paint Marking

In the case of a single excavation of known dimensions and location, delineate the exact area to be excavated with white paint through the use of dots or dashes, or a continuous solid line. Limit the size of each dash to 6 inches in length and 1 inch in width, with interval spacing not less than 48 inches between each dash. When using a solid line, limit its width to 1 inch. In either case, excavators must insure that their white paint marks cannot be misinterpreted as a traffic or pedestrian control.

In the case of numerous excavations or one long, continuous excavation, mark the center line of the excavation with arrows showing the direction of the excavation. Mark lateral excavation with an arrow

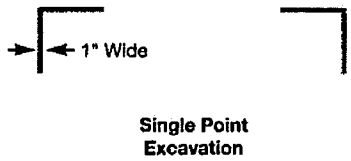

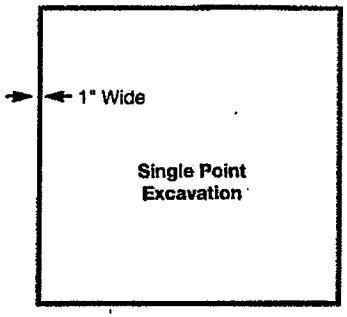

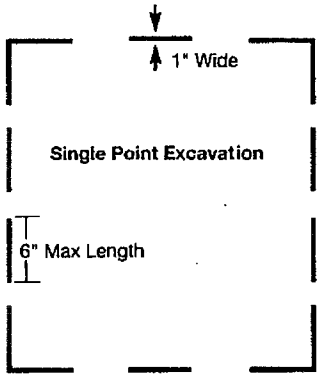

Dash Line Marking

showing direction from the center line with an additional mark at the curb of property line. Limit the size of each arrow to 6 inches in length and 1 inch in width, with interval spacing not less than 48 inches between each arrow. When calling the regional notification center for locating, give the width of the excavation in number of feet either side of the center line of lateral marks.

The marked area of excavation should be identified by the name, initials or logo, in white paint, of the company planning to conduct the excavation.

Delineate the area to be excavated before calling the regional notification center. If this is impractical due to permit requirements or other restrictions, notify the center of the exact date and time the excavation will be delineated. This will assist the operators of subsurface installations in scheduling their field marking.

All excavators are reminded that premarking is a requirement of the California Code of Regulations, Section 4216 and 4217. Failure to premark when practical can jeopardize your permit, or result in civil penalties. If premarking is not practical, the excavator shall contact the regional notification center to advise the operators that the excavator shall identify the area to be excavated in another manner sufficient to enable the operator to determine the exact area of the excavation to be field marked.

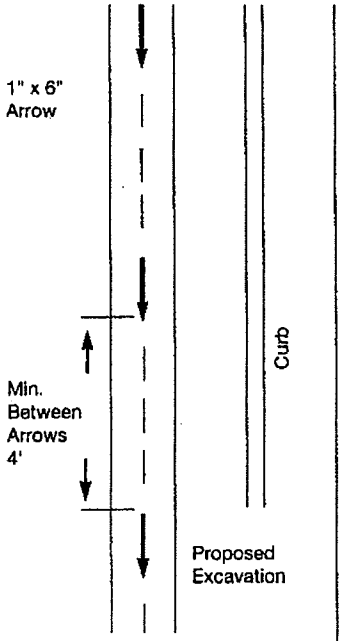

Trench or Continuous Excavation

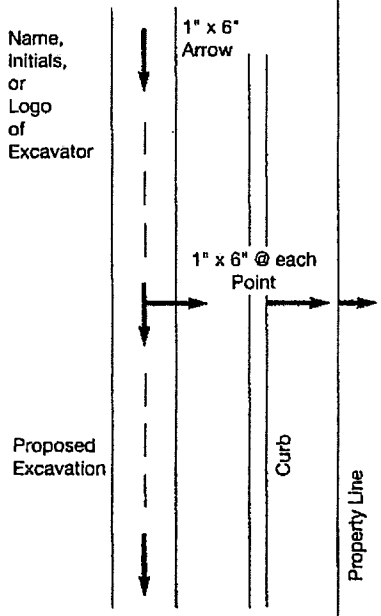

Lateral Tie-ins
Curbs & Property Lines

APPENDIX I

RED IMPORTED FIRE ANT COOPERATIVE AGREEMENT

COOPERATIVE RED IMPORTED FIRE ANT PROJECT

SOIL COMPANY COMPLIANCE AGREEMENT NO-

[Pursuant to California Food and Agricultural Code Section 5701(a) and California Code of Regulations Section 3432]

PARTIES:

1. California Department of Food and Agriculture, the United States Department of Agriculture (Animal and Plant Health Inspection Service), and the Riverside County Agricultural Commissioner, cooperating as the **Cooperative Red Imported Fire Ant Project** (subsequently referred to as "Cooperative RIFA Project").

Project Officer:_____
73-710 Fred Waring Drive Suite 220
Palm Desert, CA 92260
Telephone: (760) 776-8208
Facsimile: (760) 776-8091

2. Name of Company:_____ (subsequently referred to as "Company")

Mailing Address:_____ City:_____ Zip:_____

Physical Location:_____City:_____ Zip:_____

GPS:_____ TB:_____ XST:_____

Phone:_____ Fax:_____ Contact:_____

Comments:_____Acres:_____

BACKGROUND:

Red Imported Fire Ants present a real and present danger to persons and property in the State of California. Movement of soil is a recognized channel for the spread of Red Imported Fire Ants from established locations to new locations. The Cooperative RIFA Project is a cooperative effort between public entities which are responsible for containing the movement of Red Imported Fire Ants. Soil Company is located within an identified Red Imported Fire Ant Quarantine Area.

AGREEMENT:

A. The Cooperative RIFA Project will permit Company to self-execute the RIFA Quarantine requirements attached as Exhibit(s) _____ , inclusive and incorporated into this agreement by reference as if fully set out.

B. In exchange for the Cooperative RIFA Project's promise contained in sub-paragraph "A" above, Company agrees to:

1. Handle, process, and/or move regulated articles in accordance with the RIFA Quarantine requirements;

2. Follow the Cooperative RIFA Project's instructions, whether written or in the form of a verbal communication from the Project Officer, for the use of any and all RIFA permits and certificates;

3. Maintain and make such records as the Cooperative RIFA project requires accessible for inspection upon reasonable notice by the Cooperative RIFA Project's Project Officer. These records shall be maintained for a period of the later of two years or the resolution of any outstanding claims; and,

C. Agreement becomes effective on signing and shall remain in effect until canceled by either party on 30 days notice to the other at the address of either appearing above. However, the Cooperative RIFA Project may accelerate the notice to immediate for cause, including but not limited to discovery of RIFA on property or Company's abandonment of the procedures outlined in the attached Exhibits.

D. Company assumes liability, if any, arising from the manner in which Company applies treatments.

NOTICE: **Any signatory or employee of any signatory who violates the terms of this Compliance Agreement may be subject to Civil Penalties pursuant to California Food and Agricultural Code Section 5705.**

Signed in the County of_____, in the State of California on _____/___/20__

Company, by:	Cooperative RIFA Project, by:
_____	_____
Manager/Owner (Print Name)	Project Officer (Print Name)
_____	_____
Signature	Signature

CA Form Rev. 8/22/99

COOPERATIVE RED IMPORTED FIRE ANT PROJECT

Orange, Los Angeles, and Riverside County Agricultural Commissioners – CDFA – USDA
Project Headquarters – 73-710 Fred Waring Drive, 220, Palm Desert, CA 92260
PH: (760) 776-8208 FAX: (760) 776-8091

TO ALL CONCERNED WITH SOIL MOVEMENT IN ORANGE COUNTY AND THE QUARANTINED AREAS OF RIVERSIDE AND LOS ANGELES COUNTIES:

The State of California has established a Quarantine against the Red Imported Fire Ant (RIFA) in all of Orange County and parts of Los Angeles and Riverside Counties. As a result, restrictions have been placed on the movement of soil, except when commercially packaged, and products associated with soil, including baled hay that has been in direct contact with the ground, plants and sod with roots and soil with roots and soil attached, and soil-moving equipment, unless free of all noncompacted soil. These activities must be certified by RIFA Project Regulatory personnel or by the Agricultural Commissioners Office of the County of Orange, Los Angeles, or Riverside.

Certification for movement of soil from or within the quarantined area may be made by calling the Project and scheduling an inspection at least 24 hours in advance. Inspections are free and may consist of a visual survey or by trapping the area and determining if RIFA are present. Certification for movement of soil within the quarantined area will be based on the severity of RIFA in the general area where the soil is being excavated in conjunction with where the soil is to be moved. RIFA Form CA-1 (attached) may be faxed to the Project office with the appropriate information. If no RIFA are found at the site of origination, movement is permitted and a certification will be provided stating that the site found negative for RIFA. If RIFA are found at the origination site, movement is prohibited until a pesticide treatment plan is established as required by Project personnel.

There are many federal, state, county, and city governments as well as even more private companies and persons dealing in soil movement such as grading, digging, landscaping, and other building projects. If you are unsure as to whether or not your project is subject to these requirements, please fax a copy of the form CA-1 to (760) 776-8091. We will respond within 1 business day.

Thank you for your cooperation and help in this matter.

I have read and understand this document:_____
(print name)

_____
(signature)

Fax number: (____)_____

Company:_____ Phone number: (____)_____

Address: _____ Date: _____

_____ Rev. 4/12/99

Job Site
Address:_____

It is the responsibility of each person involved in the movement of soil to report the sightings of ants.
We will assign you an identification number (Compliance Agreement #) when you fax or mail in your request for an inspection.

COOPERATIVE RED IMPORTED FIRE ANT PROJECT
RIVERSIDE COUNTY AGRICULTURAL COMMISSIONER, CDFA, USDA
73-710 Fred Waring Drive Suite 220 Palm Desert, CA 92260
PH: (760) 776-8208 FX: (760) 776-8091

Protocol for Bulk Soil Shipment

1. Protein-bait trap the site intended for excavation to determine its current RIFA status.

2. If the site is positive for RIFA, Project Personnel will put the site on hold, then notify the homeowner and the contractor **(contractor is responsible for notifying any and all sub-contractors related to the job).** The homeowner or contractor will need to contact an approved Pest Control Operator (PCO) to set up a treatment with Amdro Pro (EPA # 241-322). Project will provide a list of PCO's licensed for this work in Riverside County. Leave insecticide in place for 48 hours without water being applied to area. Project staff will need to know exact location of where soil from site is going.

3. Project staff will do a follow-up inspection at the site within 5 working days after application. Homeowner or contractor will need to have receipt or documentation from PCO that the appropriate treatment was done. Project officer will take a copy of the receipt for our records. If no RIFA is detected, then the hold notice is released.

4. If RIFA is still present, an attempt will be made to locate the colony. If discovered, a mound or colony drench should be done using an approved product for Mound or Colony Treatments. If colony is not located, then another treatment should be done using a product for Broadcast Baiting following all label instructions. Leave insecticide in place for 48 hours without water being applied to area.

5. Project staff will do a follow-up inspection at the site within another 5 days. Homeowner or contractor will need to have receipt or documentation from PCO that the appropriate treatment was done. Project officer will take a copy of the receipt for our records. If no RIFA is detected, then the hold notice is released.

6. If RIFA is still present, site can be excavated, but in the presence of a Project officer. Officer will coordinate with homeowner or contractor.

Rev. 9/21/99

COOPERATIVE RED IMPORTED FIRE ANT PROJECT
Notification of Intent to Move Soil from or within Quarantined Areas of Orange, Riverside, and Los Angeles Counties

RIFA Compliance Agreement #_____	Permit # _____ Issuing City/County Agency

Name of Company Requesting Approval:_____

Contact Person: _____

Address: _____City: _____ Zip: _____

Telephone: (_____)_____ Fax: (_____)_____

Excavation Location: _____ TB*: _____

_____ ACRES: _____

_____

Destination Location:

_____ TB: _____

_____ACRES: _____

_____

Estimated Quantity of Soil (e.g. # Cubic Yards): _____

Anticipated Date of Movement: _____

Urgency Level for Immediate Inspection and Release: [Circle One] **High** **Medium** **Low**

☐ Movement of Soil is Permitted.

☐ Hold Movement Until Site Checked – WE WILL CALL AS SOON AS POSSIBLE TO SCHEDULE INSPECTION DATE AND TIME.

Date Trapped: _____ # of Traps: _____ Trapped by: _____ Acres: _____

Date Picked Up: _____ Comments: _____ PDR #: _____

☐ Soil Movement is Strictly Prohibited for the Following Reason(s):

_____

Name of RIFA Project Regulatory Official: _____ Date: _____

Signature: _____ RIFA Form CA-1

Rev.4/23/99

*TB is Thomas Brothers page and grid destination

COOPERATIVE RED IMPORTED FIRE ANT PROJECT

RIVERSIDE COUNTY AGRICULTURAL COMMISSIONER, CDFA, USDA
73-710 Fred Waring Drive Suite 220 Palm Desert, CA 92260
PH: (760) 776-8208 FX: (760) 776-8091

EXHIBIT I – SOIL COMPANY

1. Holding grounds for soil product will be protein baited and inspected by RIFA project staff not less than twice a year or as often as deemed necessary by RIFA project.
2. Broadcast application of an approved fire ant bait will be applied to all permeable surfaces in or near soil product area at least twice a year including once in early spring.
3. Soil vendor establishment will maintain accurate records of all shipments of soil products received including date received, origin of soil, address and phone number of supplier and amount of shipment received.
4. Soil vendor establishment will maintain accurate records of all out-going shipments of soil product including address and phone number of receiver, date and amount of soil delivered/sold.
5. Soil vendor establishment agrees to inspect premises monthly to detect any ant infestations and to notify RIFA project staff should any suspect RIFA be found.

Rev. 7/28/99

EXHIBIT II
APPLICATION OF PESTICIDES FOR USE AGAINST RED IMPORTED FIRE ANTS

The City does not recommend any specific pesticide for the treatment of Red Imported Fire Ants. Any pesticide(s) utilized for treatment of Red Imported Fire Ants require a written recommendation from a State of California Licensed Pest Control Advisor. Application of any pesticide(s) utilized for treatment of Red Imported Fire Ants shall be performed by, or supervised by, a State of California Pest Control Operator with a current Qualified Applicator License.

APPENDIX J

OWNER-OPERATOR LISTING STATEMENT OF COMPLIANCE

STATE OF CALIFORNIA • DEPARTMENT OF TRANSPORTATION

OWNER-OPERATOR LISTING

CEM-2505 (REV 05/2001)

ADA Notice

For individuals with sensory disabilities, this document is available in alternate formats. For information call (916) 654-6410 or TDD (916) 654-3880 or write Records and Forms Management, 1120 N Street, MS-89, Sacramento, CA 95814.

NAME OF CONTRACTOR EMPLOYING OWNER OPERATOR(S)	ADDRESS

PAYROLL NO.	FOR WEEK ENDING	PROJECT AND LOCATION	CONTRACT NO.

NAME, ADDRESS, SOCIAL SECURITY NO. AND CONTRACTORS LICENSE NO. OF OWNER-OPERATOR (IF ANY)	WORK CLASSIFICATION	DESCRIPTION OF EQUIPMENT	TRUCK CAL T NO. AND/OR EQUIP. LICENSE NO.	ST OR OT	DAY AND DATE							TOTAL WEEKLY HOURS	HOURLY RATE OF PAY	GROSS PAYMENT EARNED	CHECK NO.
				S											
				O											
				S											
				O											
				S											
				O											
				S											
				O											
				S											
				O											
				S											
				O											
				S											
				O											
				S											
				O											

NOTE: CERTIFICATION WILL BE ACCEPTED ONLY FROM THE CONTRACTOR EMPLOYING THE OWNER OPERATOR: IT WILL NOT BE ACCEPTED FROM THE OWNER OPERATOR HIM / HERSELF.

STATE OF CALIFORNIA • DEPARTMENT OF TRANSPORTATION

OWNER-OPERATOR LISTING STATEMENT OF COMPLIANCE

CEM-2505 (REV 05/2001)

Date _____

_____ _____ do hereby state:
(Name of signatory party) *(Title)*

(1) That I pay or supervise the payment of the persons reported on this form as Owner-operators by _____
(Contractor or subcontractor)

on the _____, that during the payroll period commencing on the _____ day of _____
(Building or work)

_____ and ending the _____ day of _____, _____, all persons working on said project have been paid the full weekly sums earned, that no rebates have been or will be made either directly or indirectly to or on behalf of said _____ from the full weekly sums earned by any person and that no deductions have
(Contractor or subcontractor)

have been made either directly or indirectly from the full sums earned by any person, other than permissible deductions, as described here: _____

_____

_____

(2) That any payrolls or listings or otherwise under this contract required to be submitted for the above period are correct and complete; that the wage rates for laborers or mechanics contained therein are not less than the applicable wage rates contained in any wage determination incorporated into the contract; that the classifications set forth therein for each laborer or mechanic conform with the work he performed.

(3) That any apprentices employed in the above period are duly registered in a bona fide apprenticeship program registered with a State apprenticeship agency.

(4) That:

(a) WHERE FRINGE BENEFITS ARE PAID TO APPROVED PLANS, FUNDS, OR PROGRAMS

☐ In addition to the basic hourly wage rates paid to each laborer or mechanic listed in the above referenced payroll or listings payments of fringe benefits as listed in the contract have been or will be made to appropriate programs for the benefit of such employees, except as noted in Section 4(c) below.

(b) WHERE FRINGE BENEFITS ARE PAID IN CASH

☐ Each Laborer or mechanic listed in the above referenced payroll or listings has been paid as indicated on the payroll or listings an amount not less than the sum of the applicable basic hourly wage rate plus the amount of the required fringe benefits as listed in the contract, except as noted in Section 4(c) below:

(c) EXCEPTIONS

EXCEPTION (CRAFT)	EXPLANATION

Remarks:

NAME AND TITLE	SIGNATURE

On federally-funded projects, permissible deductions are defined in regulations, Part 3 (29 CFR Subtitle A), issued by the Secretary of Labor under the Copeland Act, as amended (48 Stat. 948 63 Stat. 108, 72 Stat. 967; 76 Stat. 357; 40 U.S.C. 276c).

Also, the willful falsification of any of the above statements may subject the contractor or subcontractor to civil or criminal prosecution (see Section 1001 of Title 18 and Section 231 of Title 31 of the United States Code).

APPENDIX K

FIELD EXPLORATION

FIELD EXPLORATION

Our field investigation included a site reconnaissance and a subsurface exploration program consisting of asphalt concrete coring and drilling test borings. During the site reconnaissance, the surface conditions were noted and the locations of the test borings and cores were determined and approved by Mr. Naftali with Boyle Engineering. The test borings and cores were located by pacing or by rough measurements relative to existing streets and boundary features and should be considered accurate only to the degree implied by the method used.

Ten (10) exploratory soil borings (BH-1 through BH-10) were performed within the project site on April 16, 2007. Borings were drilled to depths between 6.5 and 21.5 feet bgs. Our engineer visually logged the subsurface conditions encountered in the exploratory borings at the time of drilling and collected soil samples.

Four (4), eight (8) inch diameter asphalt cores were performed subsequent with soil borings.

Test borings were advanced using a truck mounted drill rig equipped with 8-inch diameter hollow-stem augers for soil sampling. Soil encountered in the borings were logged by a Converse representative and classified in the field by visual examination in accordance with the Unified Soil Classification System (ASTM 2488). The field descriptions have been modified where appropriate to reflect laboratory test results.

Relatively undisturbed ring and disturbed bulk samples of the subsurface soil were obtained at frequent intervals in the borings. The relatively undisturbed samples were obtained using California Modified Samplers (2.4 inches inside diameter and 3.0 inches outside diameter) lined with thin sample rings. The sampler was driven into the bottom of the borehole with successive drops of a 140-pound hammer falling 30 inches by means of automatic trip hammer. The number of successive drops of the driving weight ("blows") required for every six (6) inches for a total of 18 inches of penetration of the sampler are shown on the Logs of Borings in the "blows" column.

The soil was retained in brass rings (2.4 inches in diameter and one-inch in height). The bottom portion of the sample was retained and carefully sealed in waterproof plastic containers for shipment to the laboratory. Bulk soil samples were collected in plastic bags and brought to the laboratory. Borings were backfilled with loose soil cuttings and patched with asphalt concrete.

It should be noted that the exact depths at which material changes occurs cannot always be established accurately. Unless a more precise depth can be established by other means, change in material conditions that occur between drive samples are indicated in the logs at the top of the next drive sample.

For a key to soil symbols and terminology used in the boring logs, refer to Drawing No. A-1, *Unified Soil Classification and Key to Boring Log Symbols*. For Logs of Borings, see Drawings No. A-2 through A-11, *Logs of Borings*.

SOIL CLASSIFICATION CHART

MAJOR DIVISIONS			SYMBOLS GRAPH	SYMBOLS LETTER	TYPICAL DESCRIPTIONS
COARSE GRAINED SOILS MORE THAN 50% OF MATERIAL IS LARGER THAN NO 200 SIEVE SIZE	GRAVEL AND GRAVELLY SOILS MORE THAN 50% OF COARSE FRACTION RETAINED ON NO. 4 SIEVE	CLEAN GRAVELS (LITTLE OR NO FINES)		GW	WELL-GRADED GRAVELS, GRAVEL - SAND MIXTURES, LITTLE OR NO FINES
				GP	POORLY-GRADED GRAVELS, GRAVEL - SAND MIXTURES, LITTLE OR NO FINES
		GRAVELS WITH FINES (APPRECIABLE AMOUNT OF FINES)		GM	SILTY GRAVELS, GRAVEL - SAND - SILT MIXTURES
				GC	CLAYEY GRAVELS, GRAVEL - SAND - CLAY MIXTURES
	SAND AND SANDY SOILS MORE THAN 50% OF COARSE FRACTION PASSING ON NO. 4 SIEVE	CLEAN SANDS (LITTLE OR NO FINES)		SW	WELL-GRADED SANDS, GRAVELLY SANDS, LITTLE OR NO FINES
				SP	POORLY-GRADED SANDS, GRAVELLY SAND, LITTLE OR NO FINES
		SANDS WITH FINES (APPRECIABLE AMOUNT OF FINES)		SM	SILTY SANDS, SAND - SILT MIXTURES
				SC	CLAYEY SANDS, SAND - CLAY MIXTURES
FINE GRAINED SOILS MORE THAN 50% OF MATERIAL IS SMALLER THAN NO. 200 SIEVE SIZE	SILTS AND CLAYS	LIQUID LIMIT LESS THAN 50		ML	INORGANIC SILTS AND VERY FINE SANDS, ROCK FLOUR, SILTY OR CLAYEY FINE SANDS OR CLAYEY SILTS WITH SLIGHT PLASTICITY
				CL	INORGANIC CLAYS OF LOW TO MEDIUM PLASTICITY, GRAVELLY CLAYS, SANDY CLAYS, SILTY CLAYS, LEAN CLAYS
				OL	ORGANIC SILTS AND ORGANIC SILTY CLAYS OF LOW PLASTICITY
	SILTS AND CLAYS	LIQUID LIMIT GREATER THAN 50		MH	INORGANIC SILTS, MICACEOUS OR DIATOMACEOUS FINE SAND OR SILTY SOILS
				CH	INORGANIC CLAYS OF HIGH PLASTICITY
				OH	ORGANIC CLAYS OF MEDIUM TO HIGH PLASTICITY, ORGANIC SILTS
HIGHLY ORGANIC SOILS				PT	PEAT, HUMUS, SWAMP SOILS WITH HIGH ORGANIC CONTENTS

NOTE: DUAL SYMBOLS ARE USED TO INDICATE BORDERLINE SOIL CLASSIFICATIONS

BORING LOG SYMBOLS

SAMPLE TYPE

- STANDARD PENETRATION TEST — Split barrel sampler in accordance with ASTM D-1586-84 Standard Test Method
- DRIVE SAMPLE — 2.42" I.D. sampler.
- DRIVE SAMPLE — No recovery
- BULK SAMPLE
- GROUNDWATER WHILE DRILLING
- GROUNDWATER AFTER DRILLING

LABORATORY TESTING ABBREVIATIONS

TEST TYPE
(Results shown in Appendix B)

CLASSIFICATION

Plasticity	pi
Grain Size Analysis	ma
Passing No. 200 Sieve	wa
Sand Equivalent	se
Expansion Index	ei
Compaction Curve	max
Hydrometer	h
Disturb	Dist.

STRENGTH

Pocket Penetrometer	p
Direct Shear	ds
Direct Shear (single point)	ds*
Unconfined Compression	uc
Triaxial Compression	tx
Vane Shear	vs
Consolidation	c
Collapse Test	col
Resistance (R) Value	r
Chemical Analysis	ca
Electrical Resistivity	er
Permeability	perm

UNIFIED SOIL CLASSIFICATION AND KEY TO BORING LOG SYMBOLS

Converse Consultants

PERRIS BOULEVARD WIDENING
IRONWOOD AVENUE TO MANZANITA AVENUE
City of Moreno Valley, California
For: Boyle Engineering Corporation

Project No. 06-81-240-01

Drawing No. A - 1

Log of Boring No. BH - 1

Dates Drilled: 4/16/2007 Logged by: RK Checked By: GT

Equipment: CME 75 WITH 8" HSA Driving Weight and Drop: 140 lbs / 30 in

Ground Surface Elevation (ft): N/A Depth to Water (ft): NOT ENCOUNTERED

Depth (ft)	Graphic Log	SUMMARY OF SUBSURFACE CONDITIONS This log is part of the report prepared by Converse for this project and should be read together with the report. This summary applies only at the location of the boring and at the time of drilling. Subsurface conditions may differ at other locations and may change at this location with the passage of time. The data presented is a simplification of actual conditions encountered.	SAMPLES DRIVE	SAMPLES BULK	BLOWS/6"	MOISTURE (%)	DRY UNIT WT. (pcf)	OTHER
		6" ASPHALT CONCRETE OVER 6" AGGREGATE BASE						r
		FILL (Af) **SILTY SAND (SM):** fine- to coarse-grained, (pieces of asphalt), olive brown.	■	▨	14/17/17	5	123	
		ALLUVIUM (Qal) **SILTY SAND (SM):** fine- to coarse-grained, olive brown.	■	▨	5/7/7	4	109	
5			■		4/4/6	10	99	
			■		5/12/12	8	122	
10			■		7/9/12	10	123	
		End of boring at 11.5 feet. Groundwater not encountered during drilling. Boring backfilled with soil cuttings and surface is patched with cold asphalt concrete on 4/16/07.						
15								
20								
25								
30								

Converse Consultants

PERRIS BOULEVARD WIDENING
IRONWOOD AVENUE TO MANZANITA AVENUE
City of Moreno Valley, California
For: Boyle Engineering Corporation

Project No. 06-81-240-01

Drawing No. A - 2

Log of Boring No. BH - 2

Dates Drilled: 4/16/2007 Logged by: RK Checked By: GT

Equipment: CME 75 WITH 8" HSA Driving Weight and Drop: 140 lbs / 30 in

Ground Surface Elevation (ft): N/A Depth to Water (ft): NOT ENCOUNTERED

Depth (ft)	Graphic Log	SUMMARY OF SUBSURFACE CONDITIONS This log is part of the report prepared by Converse for this project and should be read together with the report. This summary applies only at the location of the boring and at the time of drilling. Subsurface conditions may differ at other locations and may change at this location with the passage of time. The data presented is a simplification of actual conditions encountered.	SAMPLES DRIVE	SAMPLES BULK	BLOWS/6"	MOISTURE (%)	DRY UNIT WT. (pcf)	OTHER
		4" ASPHALT CONCRETE OVER 7" AGGREGATE BASE						
		ALLUVIUM (Qal) **SILTY SAND (SM):** fine- to medium-grained, olive brown.	■	▨	5/6/7	7	122	
			■	▨	3/4/6	7	115	col
5		- few gravel to 0.5" maximum dimension	■		4/6/8	9	115	
		End of boring at 6.5 feet. Groundwater not encountered during drilling. Boring backfilled with soil cuttings and surface is patched with cold asphalt concrete on 4/16/07.						
10								
15								
20								
25								
30								

Converse Consultants

PERRIS BOULEVARD WIDENING
IRONWOOD AVENUE TO MANZANITA AVENUE
City of Moreno Valley, California
For: Boyle Engineering Corporation

Project No. 06-81-240-01

Drawing No. A - 3

Log of Boring No. BH - 3

Dates Drilled: 4/16/2007 Logged by: RK Checked By: GT

Equipment: CME 75 WITH 8" HSA Driving Weight and Drop: 140 lbs / 30 in

Ground Surface Elevation (ft): N/A Depth to Water (ft): NOT ENCOUNTERED

Depth (ft)	Graphic Log	SUMMARY OF SUBSURFACE CONDITIONS This log is part of the report prepared by Converse for this project and should be read together with the report. This summary applies only at the location of the boring and at the time of drilling. Subsurface conditions may differ at other locations and may change at this location with the passage of time. The data presented is a simplification of actual conditions encountered.	SAMPLES DRIVE	SAMPLES BULK	BLOWS/6"	MOISTURE (%)	DRY UNIT WT. (pcf)	OTHER
		4" ASPHALT CONCRETE OVER 14" AGGREGATE BASE						
		ALLUVIUM (Qal) **SILTY SAND (SM):** fine- to medium-grained, trace clay, olive brown.			10/13/17	7	127	ma
					3/3/3	7	116	ds
5					2/2/2	7	111	
					9/12/16	6	120	
10		End of boring at 8.5 feet. Groundwater not encountered during drilling. Boring backfilled with soil cuttings and surface is patched with cold asphalt concrete on 4/16/07.						
15								
20								
25								
30								

Converse Consultants

PERRIS BOULEVARD WIDENING
IRONWOOD AVENUE TO MANZANITA AVENUE
City of Moreno Valley, California
For: Boyle Engineering Corporation

Project No. 06-81-240-01

Drawing No. A - 4

Log of Boring No. BH - 4

Dates Drilled: 4/16/2007 Logged by: RK Checked By: GT

Equipment: CME 75 WITH 8" HSA Driving Weight and Drop: 140 lbs / 30 in

Ground Surface Elevation (ft): N/A Depth to Water (ft): NOT ENCOUNTERED

Depth (ft)	Graphic Log	SUMMARY OF SUBSURFACE CONDITIONS This log is part of the report prepared by Converse for this project and should be read together with the report. This summary applies only at the location of the boring and at the time of drilling. Subsurface conditions may differ at other locations and may change at this location with the passage of time. The data presented is a simplification of actual conditions encountered.	SAMPLES DRIVE	SAMPLES BULK	BLOWS/6"	MOISTURE (%)	DRY UNIT WT. (pcf)	OTHER
		4" ASPHALT CONCRETE OVER 5.5" AGGREGATE BASE						
		ALLUVIUM (Qal) **SILTY SAND (SM):** fine- to coarse-grained, trace clay, olive brown.	■	▨	16/14/14	6	129	
			■	▨	5/5/5	6	115	
5			■		2/3/5	5	108	col
			■		8/10/16	8	124	
10		- red brown	■		12/22/30	10	124	
		End of boring at 11.5 feet. Groundwater not encountered during drilling. Boring backfilled with soil cuttings and surface is patched with cold asphalt concrete on 4/16/07.						
15								
20								
25								
30								

Converse Consultants

PERRIS BOULEVARD WIDENING
IRONWOOD AVENUE TO MANZANITA AVENUE
City of Moreno Valley, California
For: Boyle Engineering Corporation

Project No. 06-81-240-01

Drawing No. A - 5

Log of Boring No. BH - 5

Dates Drilled: 4/16/2007 Logged by: RK Checked By: GT

Equipment: CME 75 WITH 8" HSA Driving Weight and Drop: 140 lbs / 30 in

Ground Surface Elevation (ft): N/A Depth to Water (ft): NOT ENCOUNTERED

Depth (ft)	Graphic Log	SUMMARY OF SUBSURFACE CONDITIONS This log is part of the report prepared by Converse for this project and should be read together with the report. This summary applies only at the location of the boring and at the time of drilling. Subsurface conditions may differ at other locations and may change at this location with the passage of time. The data presented is a simplification of actual conditions encountered.	SAMPLES DRIVE	SAMPLES BULK	BLOWS/6"	MOISTURE (%)	DRY UNIT WT. (pcf)	OTHER
		6" ASPHALT CONCRETE						
		ALLUVIUM (Qal) **SILTY SAND (SM):** fine- to coarse-grained, trace clay, olive brown.	■		14/22/20	8	125	
			■		5/6/4	8	119	
5			■		3/4/5	10	111	
		- brown	■		4/6/12	8	111	
10			■		7/12/14	8	116	
		End of boring at 11.5 feet. Groundwater not encountered during drilling. Boring backfilled with soil cuttings and surface is patched with cold asphalt concrete on 4/16/07.						
15								
20								
25								
30								

Converse Consultants

PERRIS BOULEVARD WIDENING
IRONWOOD AVENUE TO MANZANITA AVENUE
City of Moreno Valley, California
For: Boyle Engineering Corporation

Project No. 06-81-240-01

Drawing No. A - 6

Log of Boring No. BH - 6

Dates Drilled: 4/16/2007 Logged by: RK Checked By: GT

Equipment: CME 75 WITH 8" HSA Driving Weight and Drop: 140 lbs / 30 in

Ground Surface Elevation (ft): N/A Depth to Water (ft): NOT ENCOUNTERED

Depth (ft)	Graphic Log	SUMMARY OF SUBSURFACE CONDITIONS This log is part of the report prepared by Converse for this project and should be read together with the report. This summary applies only at the location of the boring and at the time of drilling. Subsurface conditions may differ at other locations and may change at this location with the passage of time. The data presented is a simplification of actual conditions encountered.	SAMPLES DRIVE	SAMPLES BULK	BLOWS/6"	MOISTURE (%)	DRY UNIT WT. (pcf)	OTHER
		6" ASPHALT CONCRETE						
		ALLUVIUM (Qal) **SILTY SAND (SM):** fine- to coarse-grained, trace clay, olive brown.	■		18/20/15	9	128	
			■		7/8/12	7	121	
5			■		7/10/12	7	118	
			■		8/8/12	7	121	
10			■		8/7/10	8	112	
		End of boring at 11.5 feet. Groundwater not encountered during drilling. Boring backfilled with soil cuttings and surface is patched with cold asphalt concrete on 4/16/07.						
15								
20								
25								
30								

Converse Consultants

PERRIS BOULEVARD WIDENING
IRONWOOD AVENUE TO MANZANITA AVENUE
City of Moreno Valley, California
For: Boyle Engineering Corporation

Project No. 06-81-240-01

Drawing No. A - 7

Log of Boring No. BH - 7

Dates Drilled: 4/16/2007 Logged by: RK Checked By: GT

Equipment: CME 75 WITH 8" HSA Driving Weight and Drop: 140 lbs / 30 in

Ground Surface Elevation (ft): N/A Depth to Water (ft): NOT ENCOUNTERED

Depth (ft)	Graphic Log	SUMMARY OF SUBSURFACE CONDITIONS This log is part of the report prepared by Converse for this project and should be read together with the report. This summary applies only at the location of the boring and at the time of drilling. Subsurface conditions may differ at other locations and may change at this location with the passage of time. The data presented is a simplification of actual conditions encountered.	SAMPLES DRIVE	SAMPLES BULK	BLOWS/6"	MOISTURE (%)	DRY UNIT WT. (pcf)	OTHER
		6.5" ASPHALT CONCRETE						ei, r
		ALLUVIUM (Qal) **SILTY SAND (SM):** fine- to medium-grained, olive brown.	■	▨	8/9/10	7	117	
			■	▨	4/6/8	4	105	
5			■		4/4/8	4	103	
			■		14/31/50 (5")	6	125	
10		- trace clay, orange brown	■		19/28/40	7	123	
15		- olive brown	■		19/24/28	7	126	
20		- brown	■		14/18/28	6	117	
		End of boring at 21.5 feet. Groundwater not encountered during drilling. Boring backfilled with soil cuttings and surface is patched with cold asphalt concrete on 4/16/07.						
25								
30								

Converse Consultants

PERRIS BOULEVARD WIDENING
IRONWOOD AVENUE TO MANZANITA AVENUE
City of Moreno Valley, California
For: Boyle Engineering Corporation

Project No. 06-81-240-01

Drawing No. A - 8

Log of Boring No. BH - 8

Dates Drilled: 4/16/2007 Logged by: RK Checked By: GT

Equipment: CME 75 WITH 8" HSA Driving Weight and Drop: 140 lbs / 30 in

Ground Surface Elevation (ft): N/A Depth to Water (ft): NOT ENCOUNTERED

Depth (ft)	Graphic Log	SUMMARY OF SUBSURFACE CONDITIONS This log is part of the report prepared by Converse for this project and should be read together with the report. This summary applies only at the location of the boring and at the time of drilling. Subsurface conditions may differ at other locations and may change at this location with the passage of time. The data presented is a simplification of actual conditions encountered.	SAMPLES DRIVE	SAMPLES BULK	BLOWS/6"	MOISTURE (%)	DRY UNIT WT. (pcf)	OTHER
		4" ASPHALT CONCRETE						
		ALLUVIUM (Qal) **SILTY SAND (SM):** fine- to coarse-grained, olive brown.	■		4/4/6	5	109	
			■		8/12/31	7	127	ma
5		- light brown	■		22/35/26	6	120	
			■		17/17/20	10	122	
10			■		14/16/24	9	116	
15			■		20/24/50	8	114	
20			■		19/31/43	8	121	
25		End of boring at 21.5 feet. Groundwater not encountered during drilling. Boring backfilled with soil cuttings and surface is patched with cold asphalt concrete on 4/16/07.						
30								

Converse Consultants

PERRIS BOULEVARD WIDENING
IRONWOOD AVENUE TO MANZANITA AVENUE
City of Moreno Valley, California
For: Boyle Engineering Corporation

Project No. 06-81-240-01

Drawing No. A - 9

Log of Boring No. BH - 9

Dates Drilled: 4/16/2007 Logged by: RK Checked By: GT

Equipment: CME 75 WITH 8" HSA Driving Weight and Drop: 140 lbs / 30 in

Ground Surface Elevation (ft): N/A Depth to Water (ft): NOT ENCOUNTERED

Depth (ft)	Graphic Log	SUMMARY OF SUBSURFACE CONDITIONS This log is part of the report prepared by Converse for this project and should be read together with the report. This summary applies only at the location of the boring and at the time of drilling. Subsurface conditions may differ at other locations and may change at this location with the passage of time. The data presented is a simplification of actual conditions encountered.	SAMPLES DRIVE	SAMPLES BULK	BLOWS/6"	MOISTURE (%)	DRY UNIT WT. (pcf)	OTHER
		5.5" ASPHALT CONCRETE						
		ALLUVIUM (Qal) **SILTY SAND (SM):** fine- to coarse-grained, trace clay, olive brown.	■	▨	8/12/12	8	119	max, ca, er
			■	▨	5/7/9	10	125	
5			■		7/8/9	8	123	col
			■		3/3/3	7	115	ds, ma
10			■		2/4/10	5	109	
15			■		12/17/22	7	126	
20		- dark brown	■		12/14/30	8	121	
		End of boring at 21.5 feet. Groundwater not encountered during drilling. Boring backfilled with soil cuttings and surface is patched with cold asphalt concrete on 4/16/07.						
25								
30								

Converse Consultants

PERRIS BOULEVARD WIDENING
IRONWOOD AVENUE TO MANZANITA AVENUE
City of Moreno Valley, California
For: Boyle Engineering Corporation

Project No. 06-81-240-01

Drawing No. A - 10

Log of Boring No. BH -10

Dates Drilled: 4/16/2007 Logged by: RK Checked By: GT

Equipment: CME 75 WITH 8" HSA Driving Weight and Drop: 140 lbs / 30 in

Ground Surface Elevation (ft): N/A Depth to Water (ft): NOT ENCOUNTERED

Depth (ft)	Graphic Log	SUMMARY OF SUBSURFACE CONDITIONS This log is part of the report prepared by Converse for this project and should be read together with the report. This summary applies only at the location of the boring and at the time of drilling. Subsurface conditions may differ at other locations and may change at this location with the passage of time. The data presented is a simplification of actual conditions encountered.	SAMPLES DRIVE	SAMPLES BULK	BLOWS/6"	MOISTURE (%)	DRY UNIT WT. (pcf)	OTHER
		5" ASPHALT CONCRETE						r
		ALLUVIUM (Qal) **SILTY SAND (SM):** fine- to medium-grained, light olive brown.	■	▨	7/19/21	3	108	
		- trace clay	■	▨	12/18/21	9	120	
5		- brown	■		14/16/20	8	116	
		End of boring at 6.5 feet. Groundwater not encountered during drilling. Boring backfilled with soil cuttings and surface is patched with cold asphalt concrete on 4/16/07.						
10								
15								
20								
25								
30								

Converse Consultants

PERRIS BOULEVARD WIDENING
IRONWOOD AVENUE TO MANZANITA AVENUE
City of Moreno Valley, California
For: Boyle Engineering Corporation

Project No. 06-81-240-01

Drawing No. A - 11

APPENDIX L

MITIGATION MONITORING AND REPORTING PLAN

MITIGATION MONITORING AND COMPLIANCE PROGRAM CHECKLIST

Project File Name: Perris Boulevard Widening Project (between Manzanita Avenue and Ironwood Avenue)

Project Proponent: City of Moreno Valley

Prepared by: City of Moreno Valley

Date: July 31, 2008

Mitigation Measure No. / Implementing Action	Responsible for Monitoring	Monitoring Frequency	Timing of Verification	Method of Verification	Verified Date/ Initials	Sanctions for Non-Compliance
AIR QUALITY						
AIR-01 The construction contractor shall select the construction equipment used on-site based on low emission factors and high energy efficiency. The construction contractor shall ensure that construction grading plans include a statement that all construction equipment will be tuned and maintained in accordance with the manufacturer's specifications.	City Engineer or designee	Prior to grading	Review of plans	Separate submittal		Withhold Grading Permit
AIR-02 The construction contractor shall use electric or diesel-powered equipment in lieu of gasoline-powered engines where feasible.	City Engineer or designee	During construction	On-Site Inspection	On-Site Inspection		Stop Work Order
AIR-03 The construction contractor shall ensure that construction grading plans include a statement that work crews will shut off equipment when not in use.	City Engineer or designee	Prior to grading	Review of plans	Separate Submittal		Withhold Grading Permit
AIR-04 The construction contractor shall time the construction activities so as not to interfere with peak hour traffic and so as to minimize obstruction of through traffic lanes adjacent to the site; if necessary, a flagperson shall be retained to maintain safety adjacent to existing roadways.	City Engineer or designee	During construction	On-Site Inspection	On-Site Inspection		Stop Work Order
AIR-05 The construction contractor shall support and encourage ridesharing and transit incentives for the construction crew.	City Engineer or designee	During construction	On-Site Inspection	On-Site Inspection		None
CULTURAL RESOURCES						
CUL-01: In the event a subsurface cultural and/or paleontological resource is uncovered during the course of the project, ground-disturbing activities in the vicinity of the find should be redirected until the nature and extent of the find can be evaluated by a qualified paleontologist (as determined by the City). Any such resource uncovered during	City Engineer or designee	Throughout construction	During grading and construction	On-site inspection		Stop Work Order

Mitigation Measure No. / Implementing Action	Responsible for Monitoring	Monitoring Frequency	Timing of Verification	Method of Verification	Verified Date/ Initials	Sanctions for Non-Compliance
the course of the project related to grading or construction shall be recorded and/or removed per applicable City and/or State regulations.						
HYDROLOGY AND WATER QUALITY						
HYD-01 Prior to the first issuance of a grading permit by the City, the construction contractor shall file a Notice of Intent (NOI) with the Santa Ana Regional Water Quality Control Board for the project to be covered under the State National Pollutant Discharge Elimination System (NPDES) General Construction Permit for discharge of stormwater associated with construction activities.	City Engineer or designee	Prior to grading	Prior to Issuance of Grading Permits	Submittal of Evidence of NPDES Compliance/ NOI		Withhold Grading Permits