APPENDIX 1.1:

APPROVED TRAFFIC STUDY SCOPING AGREEMENT

This Page Intentionally Left Blank

Date: December 9, 2015 (Revised)

This letter acknowledges the City of Moreno Valley Transportation Engineering Division requirements for the traffic impact analysis of the following project:

Case No.

Project Name: Indian Street Commerce Center Project

Project Address: 17845 Indian Street

Project Description: Total building is 436,350 square feet of which 349,080 square feet will be allocated to High-Cube Warehouse/Distribution Center use and 87,270 square feet to Manufacturing use

Related Cases:

	Consultant	Developer Representative
Name:	URBAN CROSSROADS, INC. Attn: Aric Evatt	Applied Planning, Inc. Attn: Ross Geller
Address:	41 Corporate Park, Suite 300 Irvine, CA 92606	5817 Pine Avenue Suite A Chino Hills, CA 91709
Telephone:	949-336-5978	909-937-0333

I. Background

The proposed Indian Street Commerce Center development (referred to as "Project") is located at 17845 Indian Street in the City of Moreno Valley. The Project is proposed to consist of a total of 436,350 square feet, of which 349,080 square feet would be allocated to High-Cube Warehouse / Distribution Center use and 87,270 square feet to Manufacturing use within a single building.

The Project is anticipated to be built in a single phase and the opening year of 2020 will be evaluated for the purposes of this analysis (minimum five-year opening year per Moreno Valley traffic study guidelines). See preliminary site plan on **Exhibit 1**. **Exhibit 2** illustrates the study area and proposed existing and opening year intersection analysis locations.

II. Trip Geographic Distribution and Assignment

The project trip distribution patterns were developed based on an understanding of existing travel patterns in the area, the geographical location of the site, the site's proximity to the local arterial and regional state highway system:

- **Exhibit 3:** Project Passenger Car Trip Distribution
- **Exhibit 4:** Project Trucks Trip Distribution

III. Site Trip Generation Forecast

A. Source for trip generation rates: Institute of Transportation Engineers (ITE) *Trip Generation Manual* 9th Edition (2012) for ITE Land Use Code 130 (Manufacturing) using the City of Fontana Truck Trip Generation recommended vehicle mix and ITE Land Use Code 152 (High-Cube Warehousing) using SCAQMD recommended vehicle mix.

B. Weekday AM Peak: 7:00-9:00 AM

C. Weekday PM Peak: 4:00-6:00 PM

D. Intersection and link acceptable Level of Service D for some intersections and links and Level of Service C for others based upon the current City policy. (Use Highway Capacity Manual 2010 operations procedures; parameters per County of Riverside Traffic Impact Analysis Guidelines)

Proposed Use Rates (1) (See attached **Table 1**)

Manufacturing (per TSF)	Daily: 3.820	AM: 0.730	PM: 0.730
High-Cube Warehouse (per TSF)	Daily: 1.680	AM: 0.110	PM: 0.120

Internal Trip Allowance:	Yes: _____	No: X	Percentage: _____
Pass-by Trip Allowance:	Yes: _____	No: X	Percentage: _____

(1) Institute of Transportation Engineers 9th Edition *Trip Generation Manual* (2012).

E. As noted on **Table 1**, refinements to raw trip generation estimates have been made to provide a more detailed breakdown of trips by vehicle type. Trip generation rates for both Manufacturing and High-Cube Warehouse were obtained from the ITE's most current *Trip Generation* manual.

Manufacturing: Total vehicle mix percentages were obtained from the City of Fontana's Truck Trip Generation Study for Heavy Industrial (Land Use Code 110). PCE factors were

applied to the trip generation rates for heavy trucks (large 2-axles, 3-axles, 4+-axles). PCE factors are consistent with the recommended PCE factors in Appendix "C" of the San Bernardino County Congestion Management Program (CMP), 2005 Update.

High Cube Warehouse: Total vehicle mix percentages were obtained from the ITE Trip Generation manual in conjunction with the South Coast Air Quality Management District's (SCAQMD) recommended truck mix, by axle type for High Cube Warehouse/Distribution Center use. PCE factors were applied to the trip generation rates for heavy trucks (large 2-axles, 3-axles, 4+-axles). PCE factors are consistent with the recommended PCE factors in Appendix "C" of the San Bernardino County Congestion Management Program (CMP), 2005 Update.

F. As shown on **Table 2**, the proposed Project is anticipated to generate a net total of 1,439 PCE trip-ends per day with 153 PCE AM peak hour trips and 162 PCE PM peak hour trips. Tables 3 shows the Project trip generation based on actual vehicles. Consistent with other studies prepared for projects in the City, the PCE trip generation will be utilized for the purposes of the peak hour intersection operations analysis.

IV. Specific Project Issues to be Analyzed

A. The traffic study will address the adequacy of site access and identify specific near-term circulation improvements required at study area intersections and roadways to maintain acceptable peak hour and daily levels of service (LOS).
B. The traffic study shall address the project traffic impacts at all study intersections listed in Section VI and provide appropriate mitigation measures if applicable. Peak-hour traffic signal warrants shall be evaluated for all intersections that are not currently signalized.
C. Qualitative assessment of existing and planned non-motorized facilities (e.g., pedestrians, bike routes, trails, etc.) within the study area.
D. The turn pocket lengths will be determined through peak hour traffic simulations developed using SimTraffic software in an effort to identify the required storage capacity for turn lanes at each Project driveway.
E. In conjunction with study area intersecitons located within the City of Moreno Valley, the traffic study will also include fair share calculations for any potentially impacted study area intersection that is located outside of the City of Moreno Valley (i.e., City of Perris, etc.)

V. Study Horizon Year

A. Existing (2015)
B. Existing (2015) Plus Project
C. Opening Year Cumulative (2020) Without Project (existing to opening year-2020, assuming a growth rate of 2% per year and includes the traffic from other cumulative development projects in the vicinity)
D. Opening Year Cumulative (2020) With Project

VI. Facilities to be Studied

A. Analysis Locations: (See **Exhibit 2**)
   1. Interstate 215 Southbound Ramps / Harley Knox Boulevard
   2. Interstate 215 Northbound Ramps / Harley Knox Boulevard

3. Western Way / Harley Knox Boulevard
4. Patterson Avenue / Harley Knox Boulevard
5. N. Webster Avenue / Harley Knox Boulevard
6. Indian Street / Nandina Avenue
7. Indian Street / Grove View Road
8. Indian Street / Driveway 1 – Full Access
9. Indian Street / Driveway 2 – Full Access
10. Indian Street / Harley Knox Boulevard

B. Roadway Segments:
All roadway segments adjacent to intersection analysis locations where the Project contributes 50 or more peak hour trips will be analyzed (e.g. all applicable approaches of intersections listed above).

VII. Open Items

A. **Cumulative Development Projects:** There is a list of cumulative projects provided on **Table 4** (also shown graphically on **Exhibit 5**) and is consistent with the cumulative lists on other recent projects. It is requested that the list of cumulative development projects be reviewed by the City and projects be removed/added, where applicable.

B. **Signal Timing:** It is requested that the City provide us with the existing signal timing for use in the traffic impact analysis for the applicable study area intersections. Caltrans has been contacted to obtain the traffic signal timing for the freeway ramps on Harley Knox Boulevard.

VIII. Deliverables

a. Draft traffic impact studies (2 copies each)
b. Final traffic impact studies (4 copies each)

All draft and final traffic impact studies shall be delivered with the appropriate review fee to the Permit Technician, Land Development Division - Moreno Valley City Hall, 14177 Frederick Street, Moreno Valley, CA 92552. Please contact the Land Development Division at 951-413-3110 prior to the delivery of the traffic study.

A review fee will be required upon submittal of the traffic study. **A signed copy of this *Scoping Agreement* must be included in the submitted draft and final traffic impact studies.**

If you have any questions regarding this *Scoping Agreement*, please contact Eric Lewis at 951-413-3140.

Recommended By:

Aric Evatt, PTP
President
Urban Crossroads, Inc.

Approved By:

Eric Lewis, City of Moreno Valley

Attachments

EXHIBIT 1: PRELIMINARY SITE PLAN

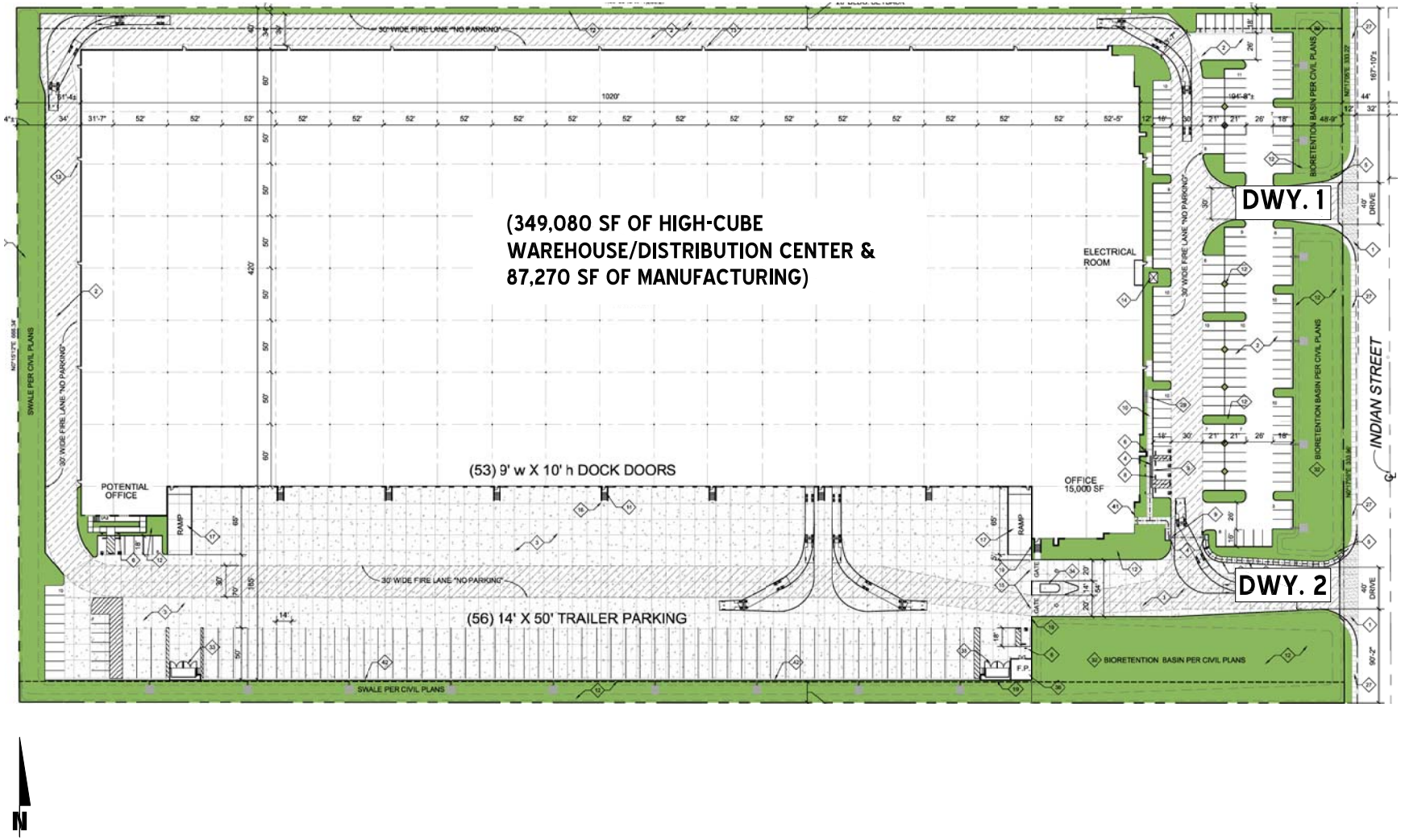

N

EXHIBIT 2: LOCATION MAP

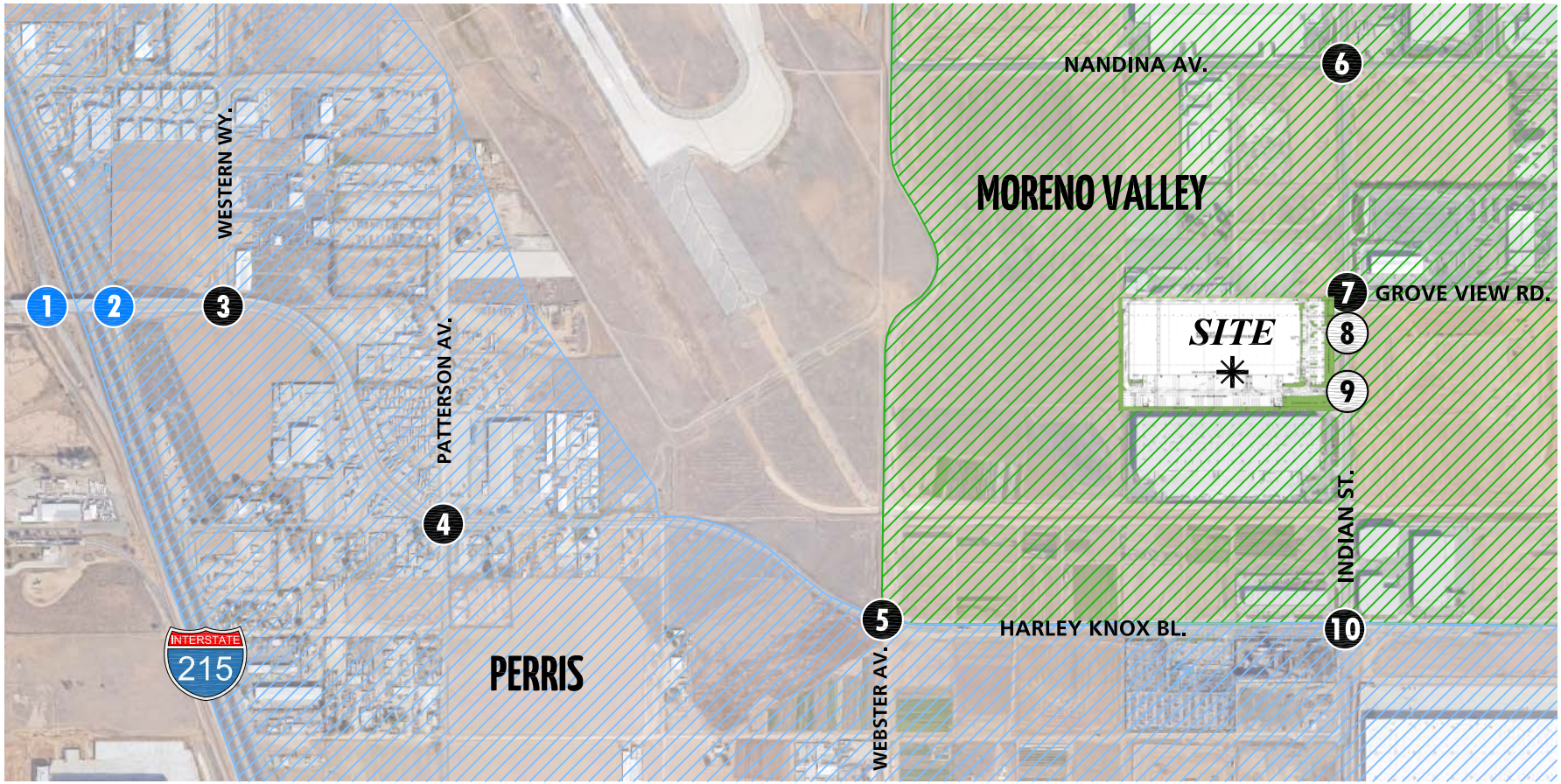

LEGEND:

- 0 = EXISTING INTERSECTION ANALYSIS LOCATION
- 0 = FUTURE INTERSECTION ANALYSIS LOCATION
- 0 = RIVERSIDE COUNTY CMP INTERSECTION ANALYSIS LOCATION

N

EXHIBIT 3: PROJECT (PASSENGER CAR) TRIP DISTRIBUTION

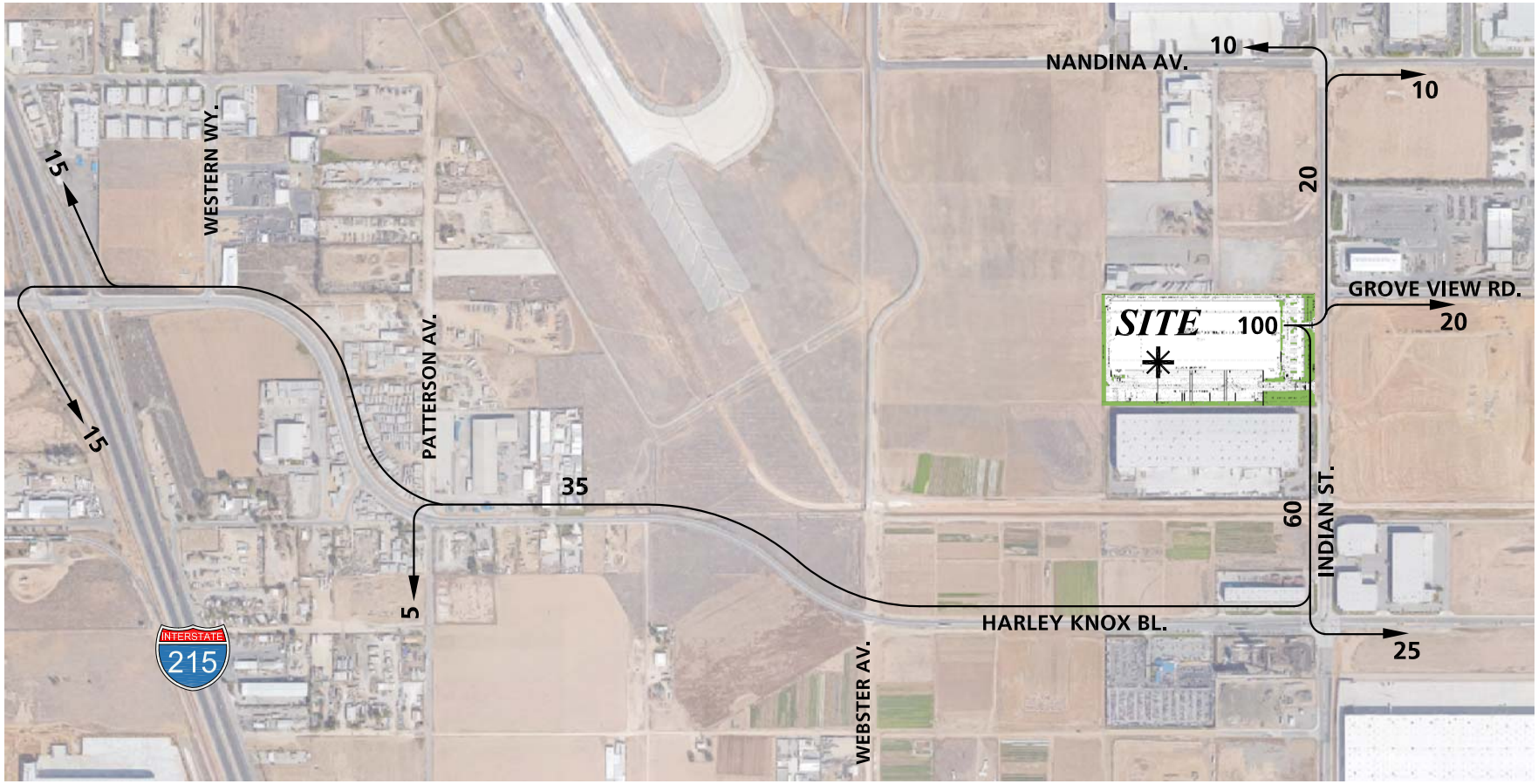

LEGEND:

10 = PERCENT TO/FROM PROJECT

N

09912 - trip.dwg

URBAN CROSSROADS

EXHIBIT 4: PROJECT (TRUCKS) TRIP DISTRIBUTION

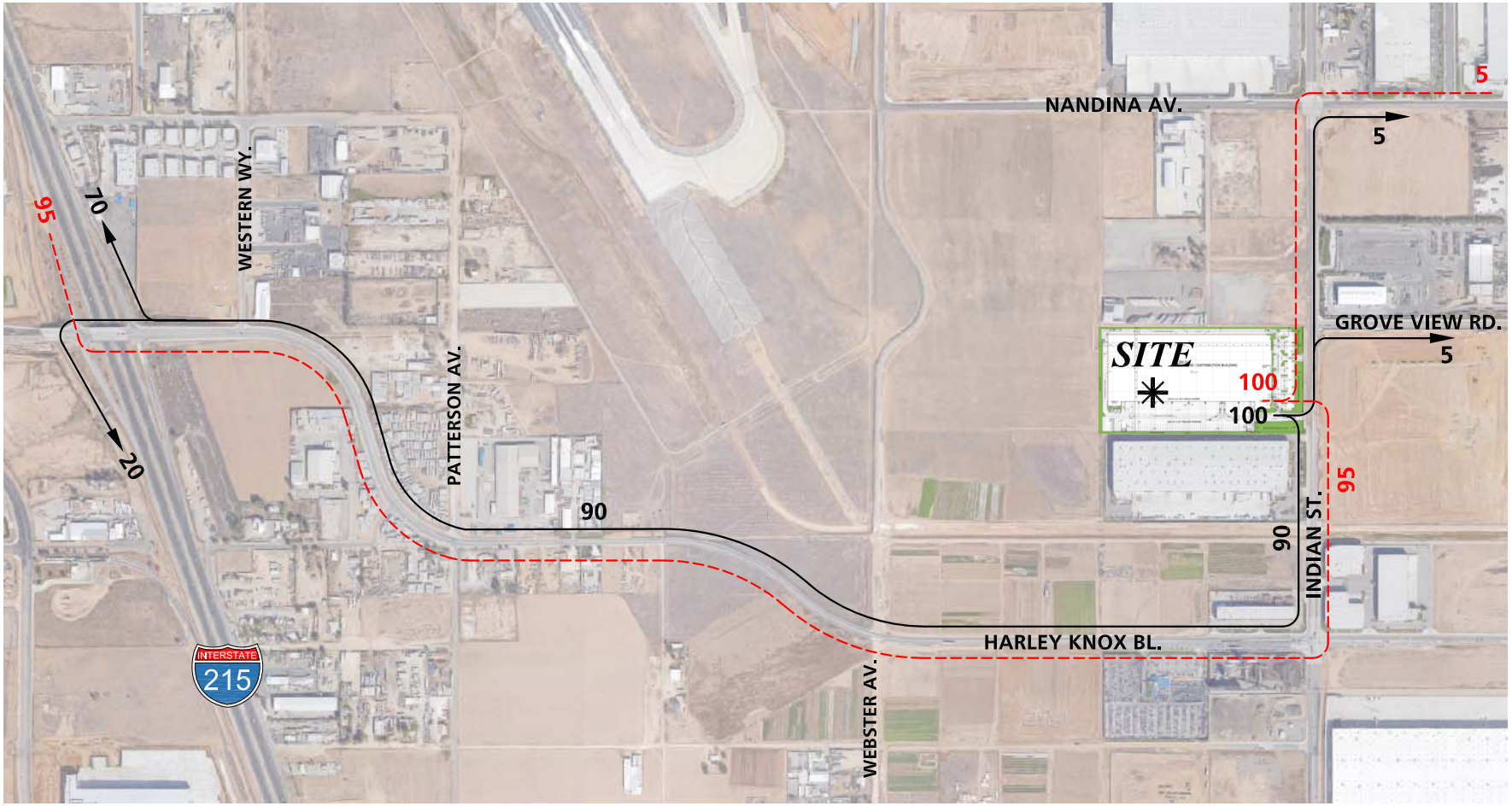

LEGEND:

10 = PERCENT TO/FROM PROJECT

◄—— = OUTBOUND

◄- - - = INBOUND

N

EXHIBIT 5: CUMULATIVE DEVELOPMENT PROJECTS LOCATION MAP

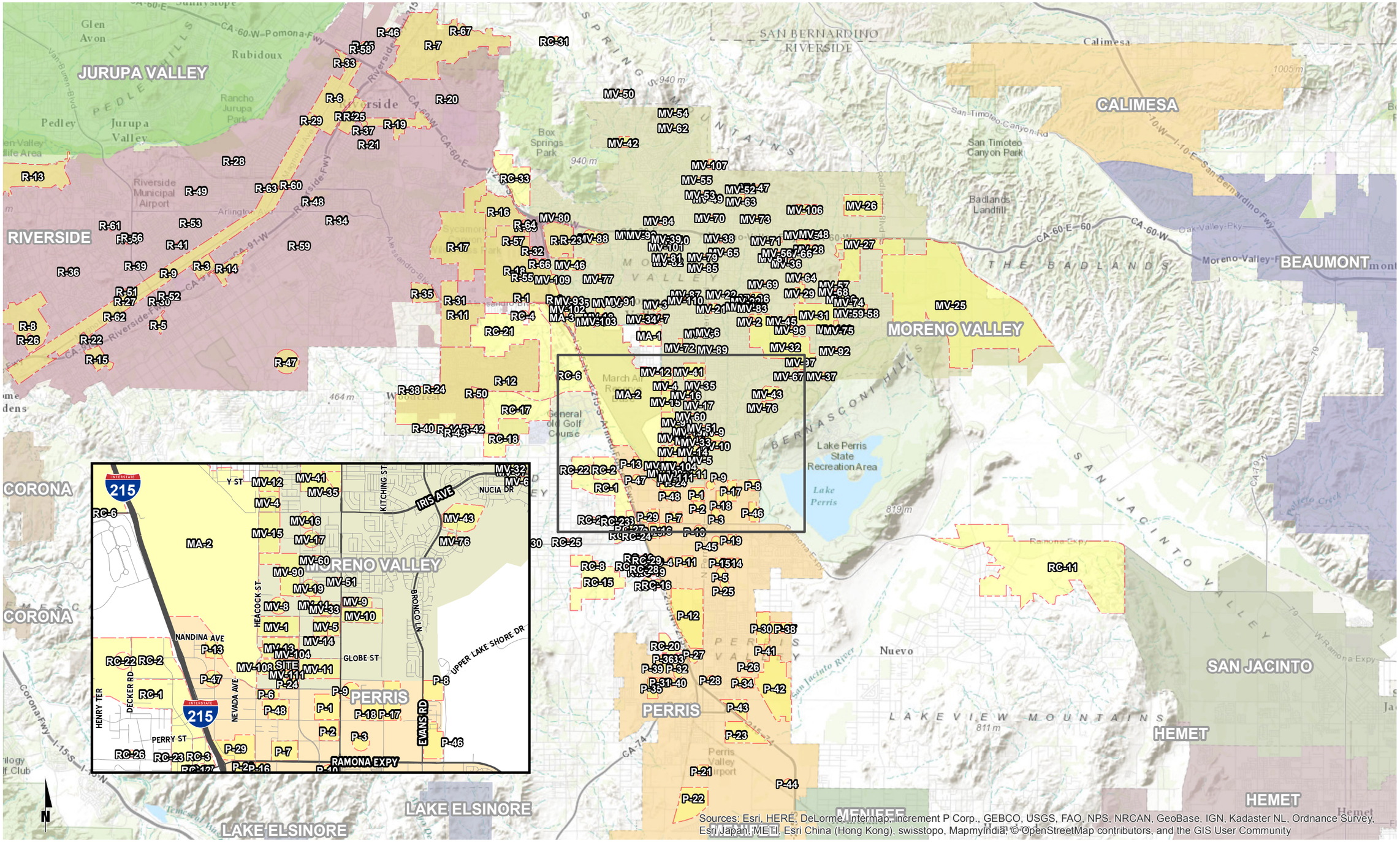

Table 1

Project Trip Generation Rates (PCE)

Land Use[1]	Units[2]	ITE LU Code	AM Peak Hour			PM Peak Hour			Daily
			In	Out	Total	In	Out	Total	
Manufacturing[3,5]	TSF	152	0.570	0.160	0.730	0.260	0.470	0.730	3.820
	Passenger Cars		0.349	0.098	0.447	0.159	0.288	0.447	2.338
	2-Axle Trucks		0.052	0.015	0.067	0.024	0.043	0.067	0.350
	3-Axle Trucks		0.145	0.041	0.185	0.066	0.119	0.185	0.970
	4-Axle+ Trucks		0.340	0.096	0.436	0.155	0.281	0.436	2.281
High-Cube Warehouse/Distribution Center[4,5]	TSF	152	0.076	0.034	0.110	0.037	0.083	0.120	1.680
	Passenger Cars		0.055	0.025	0.080	0.025	0.055	0.080	1.040
	2-Axle Trucks		0.007	0.003	0.010	0.004	0.009	0.013	0.211
	3-Axle Trucks		0.007	0.003	0.011	0.004	0.010	0.014	0.226
	4-Axle+ Trucks		0.037	0.017	0.054	0.022	0.050	0.072	1.158

Project Trip Generation Rates (Actual Vehicles)

Land Use[1]	Units[2]	ITE LU Code	AM Peak Hour			PM Peak Hour			Daily
			In	Out	Total	In	Out	Total	
Manufacturing[3]	TSF	152	0.570	0.160	0.730	0.260	0.470	0.730	3.820
	Passenger Cars		0.349	0.098	0.447	0.159	0.288	0.447	2.338
	2-Axle Trucks		0.035	0.010	0.045	0.016	0.029	0.045	0.233
	3-Axle Trucks		0.072	0.020	0.093	0.033	0.060	0.093	0.485
	4-Axle+ Trucks		0.113	0.032	0.145	0.052	0.094	0.145	0.760
High-Cube Warehouse/Distribution Center[4]	TSF	152	0.076	0.034	0.110	0.037	0.083	0.120	1.680
	Passenger Cars		0.055	0.025	0.080	0.025	0.055	0.080	1.040
	2-Axle Trucks		0.005	0.002	0.007	0.003	0.006	0.009	0.141
	3-Axle Trucks		0.004	0.002	0.005	0.002	0.005	0.007	0.113
	4-Axle+ Trucks		0.012	0.006	0.018	0.007	0.017	0.024	0.386

[1] Trip Generation Source: Institute of Transportation Engineers (ITE), Trip Generation Manual, Ninth Edition (2012).

[2] TSF = thousand square feet

[3] Vehicle Mix Source: City of Fontana Truck Trip Generation Study for LU 110, Heavy Industrial, August 2003.

[4] Vehicle Mix Source: Total truck percentage source from ITE Trip Generation manual. Truck mix (by axle type) source from SCAQMD.

AM peak hour = 72.7% passenger cars, 6.01% 2-Axle trucks, 4.83% 3-Axle trucks, 16.46% 4-Axle trucks

PM peak hour = 66.7% passenger cars, 7.33% 2-Axle trucks, 5.89% 3-Axle trucks, 20.08% 4-Axle trucks

ADT = 61.9% passenger cars, 8.38% 2-Axle trucks, 6.74% 3-Axle trucks, 22.98% 4-Axle trucks

[5] PCE rates are per SANBAG.

Table 2

Project Trip Generation Summary (PCE)

Land Use	Quantity	Units[1]	AM Peak Hour			PM Peak Hour			Daily
			In	Out	Total	In	Out	Total	
Manufacturing	87.270	TSF							
Passenger Cars:			30	9	39	14	25	39	204
Truck Trips:									
2-axle:			*5*	*1*	*6*	*2*	*4*	*6*	*31*
3-axle:			*13*	*4*	*16*	*6*	*10*	*16*	*85*
4+-axle:			*30*	*8*	*38*	*14*	*24*	*38*	*199*
- Net Truck Trips (PCE) [2]			*48*	*13*	*60*	*22*	*38*	*60*	*315*
High-Cube Warehouse	349.080	TSF							
Passenger Cars:			19	9	28	9	19	28	363
Truck Trips:									
2-axle:			*2*	*1*	*3*	*1*	*3*	*5*	*74*
3-axle:			*3*	*1*	*4*	*2*	*3*	*5*	*79*
4+-axle:			*13*	*6*	*19*	*8*	*17*	*25*	*404*
- Net Truck Trips (PCE) [2]			*18*	*8*	*26*	*11*	*23*	*35*	*557*
TOTAL NET TRIPS (PCE)[3]			**115**	**39**	**153**	**56**	**105**	**162**	**1,439**

[1] TSF = thousand square feet

[2] Vehicle Mix Source: Total truck percentage source from ITE Trip Generation manual. Truck mix (by axle type) source from SCAQMD.

[3] TOTAL NET TRIPS (PCE) = Passenger Cars + Net Truck Trips (PCE).

Table 3

Project Trip Generation Summary (Actual Vehicles)

Land Use	Quantity	Units[1]	AM Peak Hour			PM Peak Hour			Daily
			In	Out	Total	In	Out	Total	
Manufacturing	87.270	TSF							
Passenger Cars:			30	9	39	14	25	39	204
Truck Trips:									
2-axle:			*3*	*1*	*4*	*1*	*3*	*4*	*20*
3-axle:			*6*	*2*	*8*	*3*	*5*	*8*	*42*
4+-axle:			*10*	*3*	*13*	*5*	*8*	*13*	*66*
- Net Truck Trips			*19*	*6*	*25*	*9*	*16*	*25*	*128*
High-Cube Warehouse	349.080	TSF							
Passenger Cars:			19	9	28	9	19	28	363
Truck Trips:									
2-axle:			*2*	*1*	*2*	*1*	*2*	*3*	*49*
3-axle:			*1*	*1*	*2*	*1*	*2*	*2*	*40*
4+-axle:			*4*	*2*	*6*	*3*	*6*	*8*	*135*
- Net Truck Trips			*7*	*4*	*10*	*5*	*10*	*13*	*224*
TOTAL NET TRIPS (ACTUAL VEHICLES)[2]			**75**	**28**	**102**	**37**	**70**	**105**	**919**

[1] TSF = thousand square feet

[2] TOTAL NET TRIPS (Actual Vehicles) = Passenger Cars + Net Truck Trips (Actual Trucks).

Cumulative Development Land Use Summary

TAZ	Project Name	Land Use[1]	Quantity	Units[2]
	CITY OF MORENO VALLEY			
MV-1	PA 06-0152 & PA 06-0153 (First Park Nandina I & II)	High-Cube Warehouse	483.767	TSF
MV-2	Bella Vista Apartments	Apartments	220.00	DU
MV-3	PA 04-0063 (Centerpointe Buildings 8 and 9)	General Light Industrial	361.384	TSF
MV-4	PA 07-0035; PA 07-0039 (Moreno Valley Industrial Park)	General Light Industrial	204.657	TSF
		High-Cube Warehouse	409.920	TSF
MV-5	First Inland Logistics Center	High-Cube Warehouse	400.130	TSF
MV-6	TM 33607	Condo/Townhomes	52	DU
MV-7	PA 08-0093 (Centerpointe Business Park II)	General Light Industrial	99.988	TSF
MV-8	PA 06-0021; PA 06-0022; PA 06-0048; PA 06-0049 (Komar Investments)	Warehousing	287.100	TSF
MV-9	PA 06-0017 (Ivan Devries)	Industrial Park	569.200	TSF
MV-10	Modular Logistics (Dorado Property)	High-Cube Warehouse	1109.378	TSF
MV-11	PA 09-0004 (Vogel)	High-Cube Warehouse	800.000	TSF
	Sares Regis	High-Cube Warehouse	1600.000	TSF
MV-12	TM 34748	SFDR	135	DU
MV-13	First Nandina Logistics Center	High-Cube Warehouse	1450.000	TSF
MV-14	First Park Nandina III	High-Cube Warehouse	691.960	TSF
	Moreno Valley Commerce Park	High-Cube Warehouse	354.321	TSF
MV-15	March Business Center	General Light Industrial	16.732	TSF
		Warehousing	87.429	TSF
		High-Cube Warehouse	1380.246	TSF
MV-16	TM 33810	SFDR	16	DU
MV-17	TM 34151	SFDR	37	DU
MV-18	373K Industrial Facility	High-Cube Warehouse	373.030	TSF
MV-19	TM 32716	SFDR	57	DU
MV-20	TM 33417	Condo/Townhomes	60	DU
MV-21	TM 34988	Condo/Townhomes	271	DU
MV-22	TM 34216	Condo/Townhomes	39	DU
MV-23	TM 34681	Condo/Townhomes	49	DU
MV-24	PA 08-0079-0081 (WinCo Foods)	Discount Supermarket	95.440	TSF
		Specialty Retail	14.800	TSF
MV-25	Moreno Beach Marketplace (Lowe's)	Commercial Retail	175.000	TSF
	Auto Mall Specific Plan (Planning Area C)	Commercial Retail	304.500	TSF
	Westridge	High-Cube Warehouse	937.260	TSF
	ProLogis	High-Cube Warehouse	1916.190	TSF
		Warehousing	328.448	TSF
	World Logistics Center	High-Cube Warehouse	41400.000	TSF
		Warehousing	200.000	TSF
		Gas Station w/ Market	12	VFP
		Existing SFDR	7	DU
MV-26	a TR 32460 (Sussex Capital)	SFDR	57	DU
	b TR 32459 (Sussex Capital)	SFDR	11	DU
	c TR 30411 (Pacific Communities)	SFDR	24	DU
	d TR 33962 (Pacific Scene Homes)	SFDR	31	DU
	e TR 30998 (Pacific Communities)	SFDR	47	DU
MV-27	a P06-158 (Gascon)	Commercial Retail	116.360	TSF
	b Auto Mall Specific Plan (PAC)	Commercial Retail	304.500	TSF
	c ProLogis	SFDR	126	DU
		High-Cube Warehouse	1529.498	TSF
	d TR 35823 (Stowe Passco)	SFDR	261	DU
		Apartments	216	DU
MV-28	TR 36340	SFDR	275	DU
MV-29	a TR 31771 (Sanchez)	SFDR	25	DU
	b TR 34397 (Winchester Associates)	SFDR	52	DU
	c TR 32645 (Winchester Associates)	SFDR	53	DU
MV-30	Lowe's (Moreno Beach Marketplace)	Home Improvement Store	175.000	TSF
MV-31	a Senior Assisted Living	Assisted Living Units	139	DU
	b TR 31590 (Winchester Associates)	SFDR	96	DU
	c TR 32548 (Gabel, Cook & Associates)	SFDR	107	DU
	d TR 32218 (Whitney)	SFDR	63	DU
	e Medical Plaza	Medical Offices	311.633	TSF

Cumulative Development Land Use Summary

TAZ	Project Name	Land Use[1]	Quantity	Units[2]
MV-32	a Moreno Medical Campus	Medical Offices	80.000	TSF
	b Aqua Bella Specific Plan	SFDR	2,922	DU
	c TR 34329 (Granite Capitol)	SFDR	90	DU
	d Cresta Bella	General Office	30.000	TSF
MV-33	Moreno Valley Industrial Center (Industrial Area SP)	General Light Industrial	354.810	TSF
MV-34	Centerpointe Business Park	General Light Industrial	356.000	TSF
MV-35	Moreno Valley Shopping Center	Free Standing Discount Store	189.520	TSF
		Gas Station w/ Market / Car Wash	16	VFP
MV-36	TR 31305 / Richmond American	Residential	87	DU
MV-37	TR 34329 / Granite Capitol	Residential	90	DU
MV-38	TR 31814 / Moreno Valley Investors	Residential	60	DU
MV-39	TR 33771 / Creative Design Associates	Residential	12	DU
MV-40	TR 35663 / Kha	Residential	12	DU
MV-41	TR 22180 / Young Homes	Residential	140	DU
MV-42	TR 32515	Residential	161	DU
MV-43	TR 32142	Residential	81	DU
MV-44	San Michele Industrial Center (Industrial Area SP)	General Light Industrial	865.960	TSF
MV-45	Commercial Medical Plaza	Medical Offices	311.633	TSF
MV-46	Edgemont Street, South of Eucalyptus Av. (PA14-0042)	Apartments	112	DU
MV-47	28860 Professor's Fun IV, LLC/Winchester Associates, Inc.	SFDR	9	DU
MV-48	20636 Pacific Communities	SFDR	67	DU
MV-49	31297 Randy McFarland	SFDR	7	DU
MV-50	31394 Pigeon Pass, Ltd.	SFDR	78	DU
MV-51	31442 SKG Pacific Enterprises Inc.	SFDR	63	DU
MV-52	31517 Professors Prop Six/Winchester Assoc.	SFDR	83	DU
MV-53	31621 Peter Sanchez	SFDR	25	DU
MV-54	32005 Red Hill Village, LLC	SFDR	214	DU
MV-55	32126 Salvador Torres	SFDR	35	DU
MV-56	32194 Arman Pezeshkifar	SFDR	32	DU
MV-57	32408 Sanstone Inc.	SFDR	80	DU
MV-58	32844 Winchester Associates	SFDR	17	DU
MV-59	32978 Focus Estates	SFDR	19	DU
MV-60	33024 Adam Wislar	SFDR	8	DU
MV-61	33275 Jose Guzman	SFDR	4	DU
MV-62	33388 SCH Development, LLC	SFDR	16	DU
MV-63	33436 Winchester Associates	SFDR	105	DU
MV-64	33963 Rance Garrett	SFDR	31	DU
MV-65	34043 RM3 Building and Development	SFDR	12	DU
MV-66	31621 Beazer Homes	SFDR	274	DU
MV-67	30268 Pacific Communities	SFDR	83	DU
MV-68	31414 GRF - Majestic Hills	SFDR	31	DU
	Tract 31618	SFDR	55	DU
MV-69	31494 Winchester Associates	SFDR	12	DU
MV-70	32715 GFR - Trinity	SFDR	30	DU
MV-71	33256 Granite Homes	SFDR	79	DU
MV-72	32711 Isaac Genah	SFDR	9	DU
MV-73	35530 Moreno Gilman 650, LLC-Quail Ranch	SFDR	1,105	DU
MV-74	35534 Leedco Engineers	SFDR	12	DU
MV-75	36436 CV Communities	SFDR	159	DU
MV-76	36401 Continental East Fund III, LLC	SFDR	92	DU
MV-77	32215 Winchester Associates "Scottish Village"	MFDR	194	DU
MV-78	32756 Jimmy Lee	MFDR	24	DU
MV-79	35369 Tason Myers Property	MFDR	12	DU
MV-80	35414 Lincoln Property Co. Southwest	MFDR	266	DU
MV-81	35769 Michael Chen	MFDR	16	DU
MV-82	PA09-0006 Jim Nydam	MFDR	15	DU
MV-83	35861 Frederick Homes	MFDR	24	DU
MV-84	36038 Alessandro Village Plaza, LLC	MFDR	96	DU
MV-85	35304 Jimmy Lee	MFDR	12	DU
MV-86	Alessandro & Lasselle	Shopping Center	140.000	TSF
MV-87	Food 4 Less - Fueling Station	Gas Station with Convenience Market	16	VFP
MV-88	El Paso (food court)	Fast Food no Drive Thru	--	TSF
MV-89	O'Reilly Automotive	Automobile Parts Sale	7.500	TSF
	PA15-004	Retail/Restaurant/Fast Food	2.973	TSF

Cumulative Development Land Use Summary

TAZ	Project Name	Land Use[1]	Quantity	Units[2]
MV-90	Moreno Valley Logistics	High-Cube Warehouse	1351.770	TSF
		Light Industrial	385.748	TSF
MV-91	Restaurant	Restaurant	9.000	TSF
MV-92	Rancho Belago Plaza - Retail	Retail	14.000	TSF
MV-93	Yum Yum Donut Shop	Coffee/Donut Shop w/o Drive-Thru	4.351	TSF
MV-94	Hawthorn Inn & Suites	Hotel	79	RMS
MV-95	Sleep Inn Suites	Hotel	66	RMS
MV-96	Integrated Care Communities	Nursing Home	44.000	TSF
MV-97	Kaiser Permanente - Emergency Room Expansion	Medical Offices	--	TSF
MV-98	Moreno Valley Professional Center	General Office	84.000	TSF
MV-99	Olivewood Plaza - Office Building	General Office	23.000	TSF
MV-100	Renaissance Village of Moreno Valley	Senior Adult Housing-Attached	44	DU
MV-101	Riverside County Office Building	General Office	52.000	TSF
MV-102	Gateway Business Park	Residential Condo/Townhouse	34	DU
MV-103	Shaw Development	High-Cube Warehouse	367.000	TSF
MV-104	IDS/Real Estate Group - Nandina Distribution Center	High-Cube Warehouse	697.000	TSF
MV-105	Stoneridge Town Centre - Vacant Restaurant	Restaurant	5700.000	TSF
MV-106	Ironwood Residential	SFDR	144	DU
MV-107	TTM 31592 (P 13-078) Covey Ranch	SFDR	115	DU
MV-108	PA 06-0014 (Pierce Hardy Limited Partnership)	Lumbar Yard	67.000	TSF
MV-109	P06-1408	Retail	75.300	TSF
MV-110	PA13-009	Gas Station	16	VFP
MV-111	Moval Assemblage	High-Cube Warehouse	459.945	TSF
MARCH JOINT POWERS AUTHORITY				
MA-1	March Lifecare Campus Specific Plan[4]	Medical Offices	190.000	TSF
		Commercial Retail	210.000	TSF
		Research & Education	200.000	TSF
		Hospital	50	Beds
		Institutional Residential	660	Beds
MA-2	Airport Master Plan	Airport Use	559.000	TSF
MA-3	Freeway Business Center (March JPA)	High-Cube Warehouse	710.083	TSF
COUNTY OF RIVERSIDE				
RC-1	SP 341; PP 21552 (Majestic Freeway Business Center)	High-Cube Warehouse	6100.715	TSF
RC-2	PP 20699 (Oleander Business Park)	Warehousing	1206.710	TSF
RC-3	Ramona Metrolink Station	Light Rail Transit Station	300	SP
RC-4	PP 22925 (Amstar/Kaliber Development)	Office (258.102 TSF)	258.102	TSF
		Warehousing	409.312	TSF
		General Light Industrial	42.222	TSF
		Retail	10.000	TSF
RC-5	Alessandro Metrolink Station	Light Rail Transit Station	300	SP
RC-6	Meridian Business Park North	Industrial Park	5985.000	TSF
RC-7	PP 18908	General Light Industrial	133.000	TSF
RC-8	Tract 33869	SFDR	39.000	DU
RC-9	PP 16976	General Light Industrial	85.000	TSF
RC-10	PP 21144	Industrial Park	190.802	TSF
RC-11	a Villages of Lakeview	SFDR	860	DU
		Condo/Townhomes	1,920	DU
		Elementary School	1,200	STU
		Commercial Retail	100.000	TSF
		Soccer Complex	12	Fields
		City Park	8.9	AC
		County Park	8.1	AC
		Regional Park	107.1	AC
	b Motte Lakeview Ranch	SFDR	847	DU
		Condo/Townhomes	686	DU
		Apartments	467	DU
		Elementary School	650	STU
		Middle School	300	STU
		Commercial Retail	120.000	TSF
		Regional Park	177.0	AC
RC-12	CUP03315	Gas Station w/ Market	17	VFP
		Fast Food w/o Drive Thru	5.600	TSF
		High-Turnover Restaurant	6.500	TSF
RC-13	PP23342	Industrial Park	180.600	TSF
RC-14	TR30592	SFDR	131	DU

Cumulative Development Land Use Summary

TAZ	Project Name	Land Use[1]	Quantity	Units[2]
RC-15	Rider Street Quarry	Quarry	2500.0	AC
RC-16	PP 20711	Manufacturing	20.0	AC
	Yocum Baldwin	Warehousing	46.8	AC
RC-17	March Business Center - South Campus	Shopping Center	108.900	TSF
		Industrial Park	1336.700	TSF
		Large Industrial Park	3269.000	TSF
		General Office Building	140.600	TSF
		Manufacturing	215.600	TSF
		Warehousing	1379.200	TSF
		Park	50.0	AC
		R&D	1611.800	TSF
RC-18	Ben Clark Training Facility	Students	5,045	STU
		Employees	354	EMP
RC-19	PP 20103	Gen. Light Industrial	290.985	TSF
RC-20	Nuevo Business Park	Gen. Light Industrial	357.156	TSF
		Warehousing	1767.618	TSF
RC-21	Meridian (March Business Park SP)	Business Park	41917.000	TSF
RC-22	Blanding Assemblage	High-Cube Warehouse	707.880	TSF
RC-23	CUP 03527	Warehousing	8.000	TSF
RC-24	CUP 03599	Hotel	52.798	TSF
RC-25	PP 24608	Retail	9.280	TSF
RC-26	PM 32699	SFDR	2.00	DU
RC-27	PP 25699	Fast-Food w/Drive Thru	2.800	TSF
		Retail	19.000	TSF
RC-28	TR 30592	SFDR	131.00	DU
RC-29	PP 25768	Manufacturing	52.450	TSF
RC-30	CUP 03620R1	Gas Station w/ Market	8.00	VFP
RC-31	TTM 33410 Box Springs	SFDR	142	DU
RC-32	Knox Logistics	High-Cube Warehouse	1,259.050	TSF
RC-33	University Highlands	SFDR	405	DU
		Condo/Townhomes	320	DU
		Apartments	1,475	DU
		Shopping Center	50.0	TSF
		Parks	42.4	AC
CITY OF RIVERSIDE				
R-1	P07-1028 (Alessandro Business Park)	General Light Industrial	662.018	TSF
	Alessandro and Gorgonio	Fast Food w/Drive Thru	4.050	TSF
R-2	Alessandro Bl. (APN 263-091-008; 263-100-019; 263-100-005; P14-0841 to 0848)	Commercial and Industrial Complex	101.580	TSF
R-3	California Baptist University Specific Plan	University	157.0	AC
R-4	Canyon Springs Specific Plan	Hospital	280	BEDS
		Medical-Dental Office	370.000	TSF
		Senior Adult Housing-Attached	234	DU
		Assisted Living	267	BEDS
R-5	Citrus Business Park Specific Plan	Industrial Business Park	49.0	AC
R-6	Downtown Specific Plan	Residential	5,000	DU
R-7	Hunter Business Park	Industrial	1300.0	AC
R-8	La Sierra University Specific Plan	Mixed-Use		
R-9	Magnolia Avenue Specific Plan	Mixed-Use/Very High Residential	1473.0	AC
R-10	Marketplace Specific Plan	Commercial Retail/Office	200.0	AC
R-11	Mission Grove Specific Plan	Business/Office Park	56.8	AC
		Commercial Retail	68.1	AC
		High Density Residential	53.8	AC
		Low Density Residential	78.4	AC
		Medium Density Residential	155.3	AC
R-12	Orangecrest Specific Plan	Rural Residential	2.1	AC
		Business/Office Park	2.7	AC
		Commercial Retail	139.0	AC
		High Density Residential	13.7	AC
		Low Density Residential	540.8	AC
		Medium Density Residential	1217.8	AC
		Public Facilities/Institutions	121.6	AC
		Public Park	59.5	AC
R-13	Rancho La Sierra Specific Plan	SFDR	598	DU
R-14	Riverside Auto Center Specific Plan	Auto Center		

Cumulative Development Land Use Summary

TAZ	Project Name	Land Use[1]	Quantity	Units[2]
R-15	Riverwalk Vista Specific Plan	Residential	402	DU
R-16	Sycamore Canyon Specific Plan	Hillside Residential	41.8	AC
		Low Density Residential	97.3	AC
		Medium Density Residential	14.8	AC
		Very Low Density Residential	884.2	AC
		Public Park	27.9	AC
R-17	Sycamore Canyon Business Park Specific Plan	Business/Office Park	847.2	AC
		Commercial Retail	10.3	AC
R-18	Sycamore-Highlands Specific Plan	Commercial Retail	14.6	AC
		High Density Residential	52.2	AC
		Medium Density Residential	99.1	AC
		Public Facilities	1.6	AC
			144.2	AC
		Very Low Density Residential	49.1	AC
R-19	University Avenue Specific Plan	Mixed-Use	Varies	
R-20	807 Blaine Street (P09-0717; P09-0718)	Apartments	55	DU
R-21	2340 Fourteenth Street (P09-0808; P08-0809)	Senior Housing	134	BEDS
R-22	Park Sierra Avenue (P14-0026; P14-0027)	Fast Food w/Drive Thru	3.500	TSF
R-23	6287 Day Street (P10-0090; P10-0091)	Gas Station	2	VFP
	2570 Canyon Springs Parkway (P08-0274; P08-0275)	Bank w/ Drive Thru	2.746	TSF
	6211 Valley Springs Parkway (Steak 'N Shake Restaurant; P14-0536)	Fast Food w/Drive Thru	3.750	TSF
R-24	N. of Van Buren Boulevard; W. of Wood Street (P10-0808; P10-0708)	Fast Food w/Drive Thru	2.361	TSF
R-25	E. of Commerce St., between Mission Inn Av. and Ninth St. (P14-0045; P14-0046; P14-0047; P14-0048; P14-0049)	Apartments	208	DU
R-26	NWC of Riverwalk Parkway and Flat Rock Drive (P12-0019; P12-0156; P12-0158)	Convenience Store	2.400	TSF
		Coffee Shop	3.946	TSF
R-27	3875 Dawes Street (P10-0438; Magnolia Garden Condominiums)	Condo/Townhomes	62	DU
R-28	5938-5944 Grand Avenue (P12-0266; P12-0267; P12-0268)	Senior Housing	37	DU
R-29	4445 Magnolia Avenue (P13-0207; P13-0208; P13-0209; P13-0210; P13-0211)	Hospital Expansion	Varies	
R-30	SR-91/Van Buren Commercial	Commercial Retail	23.565	TSF
R-31	360 Alessandro Boulevard (P12-0419; P12-0557; P12-0558; P12-0559)	Bank	3.858	TSF
R-32	6465 Sycamore Canyon Boulevard	Health Club	4.000	TSF
R-33	2450 Market Street (P13-0087; P13-0262)	Apartments	77	DU
R-34	6091 Victoria Avenue (P13-0432)	Day Care	1.831	TSF
R-35	14601 Dauchy Av. - TM 36370 (P12-0601; P12-0697; P12-0698)	SFDR	10	DU
	TM 32180 (P07-1073)	SFDR	9	DU
	18875 Moss Road	SFDR	8	DU
	South of Clarke St., west of Crystal View Terrace (PM 34583' {09-0141; P09-173)	SFDR	3	DU
R-36	4824 Jones Avenue (P13-0181; P13-0182)	Church	23.124	TSF
R-37	2586 University avenue (P13-0650; P13-0651)	Bed and Breakfast	3.618	TSF
R-38	18580 Van Buren Boulevard (P08-0402; P13-0822)	Auto Repair Shop	8.142	TSF
R-39	4247 Van Buren Boulevard (P13-0785; P13-0787)	Church Expansion	12.166	TSF
R-40	SWC of Lurin Avenue and Wood Road (P06-0900; P08-0269; P08-0270; TTM 32301)	SFDR	20	DU
R-41	8616 California Avenue (P08-0084; PM 35852)	Condo/Townhomes	21	DU
R-42	19811 Lurin Avenue (P06-1355; TM 33480)	SFDR	32	DU
R-43	APN:266140029, 030 (P06-1396; Mariposa Avenue; TM 33481)	SFDR	25	DU
R-44	APN:266140002, 021, 022 (P06-1404; Lurin Avenue; TM 33482)	SFDR	29	DU
R-45	3719 Strong Street (P05-0269; P08-0416; TM 33550)	SFDR	9	DU
R-46	1006 & 1008 Clark Street (P06-0782; TM 34908)	SFDR	15	DU
R-47	E. of Gratton St., W. of Corsica Av., N. of Van Buren Bl. (P05-1528; P09-0087; TM 34509)	SFDR	50	DU
R-48	NWC of Dominion Avenue and Division Street (P08-0396; P08-0397; P08-0398; P08-0399; TM 35620)	Condo/Townhomes	36	DU
R-49	6639 Hillside Avenue (P08-0727; PM 35901)	Industrial	5	LOTS
R-50	19985 Van Buren Boulevard (P10-0118; Gless Ranch)	Commercial Retail	425.447	TSF
R-51	3990 Reynolds Road (P12-0021; P12-0022; P12-0074; PM 36442)	Condo/Townhomes	102	DU
R-52	NEC of Martha Way & Everest Avenue (P13-0389; TM 36579)	SFDR	5	DU
R-53	4325, 4335, 4345, 4355, 4375 Adams Street (P13-0723; P13-0724; P13-0725; TM 36654)	SFDR	62	DU
R-54	5200 Van Buren Boulevard (P09-0600; P09-0601; Walmart Expansion)	Free Standing Discount Store	22.272	TSF
R-55	P06-0160	Gen. Light Industrial	316.224	TSF
	P06-1281	Warehousing	107.732	TSF

Cumulative Development Land Use Summary

TAZ	Project Name	Land Use[1]	Quantity	Units[2]
R-56	9241 & 9265 Audrey Avenue (P12-0184; P12-0185; P12-0187; Azar Plaza)	Commercial Retail	6.150	TSF
R-57	Office, Magnon & Panattoni	Office	131.000	TSF
		Warehousing	1400.000	TSF
		Warehousing	300.000	TSF
		Warehousing	216.000	TSF
R-58	1710 Main Street (P12-0717)	Family Dollar Store	8.039	TSF
R-59	2861 Mary Street (P12-0442; P12-0443; P12-0444)	Shopping Center	56.101	TSF
R-60	3545 Central Avenue (P12-0741; P12-0743)	Riverside Plaza Renovations	35.0	AC
R-61	5731, 5741, 5761 & 5797 Pickler Street (P13-0198; P13-0199; P13-0200; P13-0201)	Apartments	30	DU
R-62	3705 Tyler Street (P13-0501; P13-0502)	Restaurant	6.000	TSF
R-63	6570 Magnolia Avenue; 3739 & 3747 Central Avenue (P13-0196; P13-0197)	Fast Food w/Drive Thru	3.795	TSF
R-64	5940-5980 Sycamore Canyon Boulevard (P13-0553; P13-0554; P13-0583; P14-0065)	Apartments	275	DU
R-65	SEC Sycamore Canyon Boulevard & Box Springs Road (P13-0607; P13-0608; P0609; P13-0854)	General Light Industrial	171.616	TSF
R-66	P06-0591	Office	37.939	TSF
		Warehousing	782.188	TSF
		Manufacturing	168.294	TSF
R-67	474 Palmyrita Avenue (P13-0956; P13-0959; P13-0960; P13-0963; P13-0964; P13-0965; P13-0966)	High-Cube Warehouse	1461.449	TSF
	CITY OF PERRIS			
P-1	P 05-0113 (IDI)	High-Cube Warehouse	1750.000	TSF
P-2	P 05-0192 (Oakmont I)	High-Cube Warehouse	697.600	TSF
P-3	P 05-0477	High-Cube Warehouse	462.692	TSF
P-4	Rados Distribution Center	High-Cube Warehouse	1200.000	TSF
P-5	Investment Development Services (IDS) II	High-Cube Warehouse	350.000	TSF
P-6	P 07-09-0018	Warehousing	170.000	TSF
P-7	P 07-07-0029 (Oakmont II)	High-Cube Warehouse	1600.000	TSF
P-8	TR 32707	SFDR	137	DU
P-9	TR 34716	SFDR	318	DU
P-10	P 05-0493 (Ridge I)	High-Cube Warehouse	700.000	TSF
P-11	Ridge II	High-Cube Warehouse	2000.000	TSF
P-12	Harvest Landing Specific Plan	SFDR	717	DU
		Condo/Townhomes	1,139	DU
		Sports Park	16.7	AC
		Business Park	1233.401	TSF
		Shopping Center	73.181	TSF
	Perris Marketplace	Shopping Center	450.000	TSF
P-13	P 06-0411 (Concrete Batch Plant)	Manufacturing	2.000	TSF
P-14	Jordan Distribution	High-Cube Warehouse	378.000	TSF
P-15	Aiere	High-Cube Warehouse	642.000	TSF
P-16	P 08-11-0005; P 08-11-0006 (Starcrest)	High-Cube Warehouse	454.088	TSF
P-17	Stratford Ranch Specific Plan	High-Cube Warehouse	1725.411	TSF
P-18	Stratford Ranch Specific Plan	High-Cube Warehouse	480.000	TSF
		General Light Industrial	120.000	TSF
P-19	P05-0493	Logistics	597.370	TSF
P-20	Starcrest, P011-0005; 08-11-0006	General Light Industrial	454.088	TSF
P-21	South Perris Industrial Phase 1	Logistics	787.700	TSF
P-22	South Perris Industrial Phase 2	Logistics	3448.734	TSF
P-23	South Perris Industrial Phase 3	Logistics	3166.857	TSF
P-24	P 04-0343	Warehousing	41.650	TSF
P-25	P 06-0228	General Light Industrial	149.738	TSF
P-26	P 06-0378	Senior Housing	429	DU
P-27	P 11-09-0011	Retail	80.000	TSF
P-28	P 12-05-0013	Apartments	75	DU
P-29	P 12-10-0005	High-Cube Warehouse	1463.887	TSF
P-30	TR 30850	Residential	496	DU
P-31	TR 30973	Residential	35	DU
P-32	TR 31225	Residential	57	DU
P-33	TR 31226	Residential	82	DU
P-34	TR 31240	Residential	114	DU
P-35	TR 31407	Residential	243	DU

Cumulative Development Land Use Summary

TAZ	Project Name	Land Use[1]	Quantity	Units[2]
P-36	TR 31650	SFDR	61	DU
P-37	TR 31659	SFDR	161	DU
P-38	TR 32041	Residential	122	DU
P-39	TR 32406	SFDR	15	DU
P-40	TR 33193	Townhomes	94	DU
P-41	TR 33338	Residential	75	DU
P-42	Park West Specific Plan	SFDR	521	DU
		Elementary School	750	STU
		Neighborhood Park	5.0	AC
P-43	The Venue	Commercial Retail	642.627	TSF
	Retail on San Jacinto	Commercial Retail	217.800	TSF
	Retail on Redlands	Fast Food w/ Drive Thru	4.500	TSF
		Pharmacy w/ Drive Thru	14.000	TSF
		Specialty Retail	31.500	TSF
P-44	South Perris Metrolink Station	Light Rail Transit Station	680	SP
P-45	IDS 04-0464	High-Cube Warehouse	1686.760	TSF
P-46	TTM 32708 (50% Complete)	SFDR	238	DU
P-47	PM 34199	Gen. Light Industrial	46.500	TSF
	DPR 05-0387	Gen. Light Industrial	9.854	TSF
	DPR 05-0452	Warehousing	31.200	TSF
	TPM 34697	Gen. Light Industrial	47.400	TSF
	DPR 06-0396	Warehousing	159.823	TSF
P-48	Integra Pacific Industrial Facility	High-Cube Warehouse	880.000	TSF

[1] SFDR = Single Family Detached Residential ; MFDR = Multi-Family Detached Residential

[2] DU = Dwelling Units; TSF = Thousand Square Feet; SP = Spaces; VFP = Vehicle Fueling Positions; RMS = Rooms; AC = Acres; EMP = Employees

[3] Source: Cactus Avenue and Commerce Center Drive Commercial Center TIA, Urban Crossroads, Inc., December 9, 2008 (Revised).

[4] Source: March Lifecare Campus Specific Plan Traffic Impact Analysis, Mountain Pacific, Inc., May 2009 (Revised).

APPENDIX 1.2:

CENTRAL TUMF ZONE TRANSPORTATION IMPROVEMENT PROGRAM

This Page Intentionally Left Blank

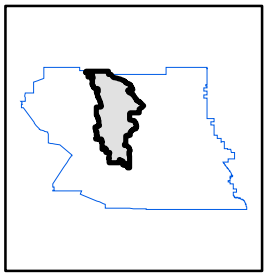

City Boundaries
Approved RTA Transit Center
Railroads
Freeways
Lakes & Rivers
TUMF Zone Boundary
Streets & Roads

Completed Structures
Approved Road Segments
RCTC Approved Road Segments
Completed Road Segment

Mid-County Parkway
2 Lanes
Bridges
Approved Structures
RCTC Approved Interchanges

Railroad Crossings
$4,550,000 per lane
$2,120,000 per lane

Interchanges
$43,780,000
$22,280,000
$10,890,000

Ultimate Number of Lanes
2 Lanes
4 Lanes
6 Lanes
8 Lanes

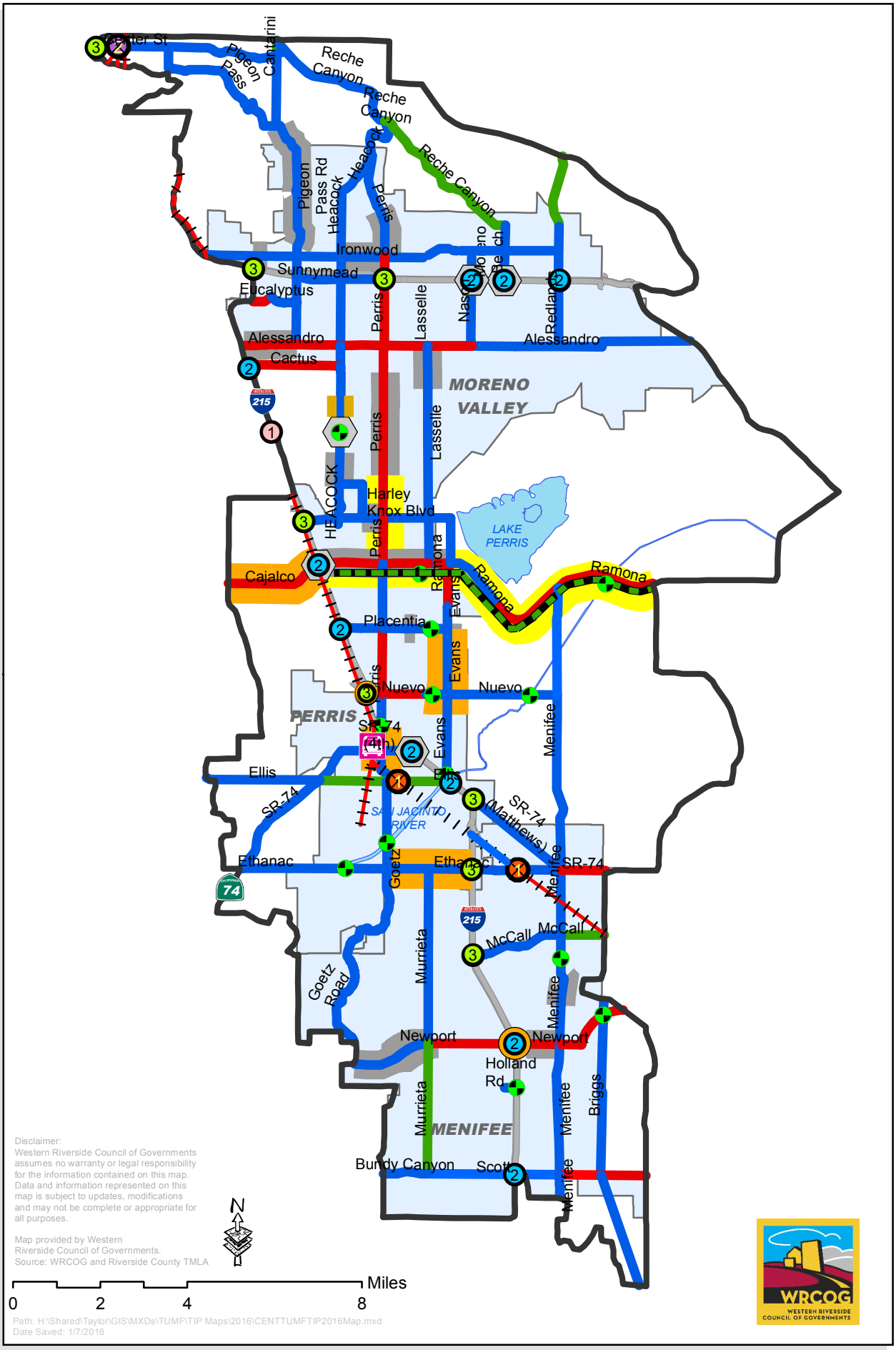

Disclaimer:
Western Riverside Council of Governments assumes no warranty or legal responsibility for the information contained on this map. Data and information represented on this map is subject to updates, modifications and may not be complete or appropriate for all purposes.

Map provided by Western Riverside Council of Governments.
Source: WRCOG and Riverside County TMLA

Path: H:\Shared\Taylor\GIS\MXDs\TUMF\TIP Maps\2016\CENTTUMFTIP2016Map.mxd
Date Saved: 1/7/2016

Administrative Amendment Approved April 2016

2016 Central TUMF Zone Transportation Improvement Program

This Page Intentionally Left Blank

APPENDIX 1.3:

SITE ACCESS QUEUING ANALYSIS

This Page Intentionally Left Blank

Intersection: 7: Indian Street & Grove View Road

Movement	WB	WB	NB	NB	SB	SB	SB
Directions Served	L	R	T	TR	L	T	T
Maximum Queue (ft)	78	44	141	141	21	76	161
Average Queue (ft)	23	10	42	44	1	11	35
95th Queue (ft)	56	34	118	125	10	44	109
Link Distance (ft)		1265	124	124		1304	1304
Upstream Blk Time (%)			1	1			
Queuing Penalty (veh)			6	8			
Storage Bay Dist (ft)	210				120		
Storage Blk Time (%)						0	
Queuing Penalty (veh)						0	

Intersection: 8: Indian Street & Driveway 1/Driveway

Movement	EB	WB	NB	NB	NB	SB
Directions Served	LTR	LTR	L	T	TR	L
Maximum Queue (ft)	44	35	33	66	73	22
Average Queue (ft)	15	6	8	4	6	2
95th Queue (ft)	40	26	29	27	34	12
Link Distance (ft)	131	221		284	284	
Upstream Blk Time (%)						
Queuing Penalty (veh)						
Storage Bay Dist (ft)			100			50
Storage Blk Time (%)						
Queuing Penalty (veh)						

Intersection: 9: Indian Street & Driveway 2

Movement	EB	NB
Directions Served	LR	L
Maximum Queue (ft)	49	65
Average Queue (ft)	20	24
95th Queue (ft)	47	52
Link Distance (ft)	155	
Upstream Blk Time (%)		
Queuing Penalty (veh)		
Storage Bay Dist (ft)		100
Storage Blk Time (%)		
Queuing Penalty (veh)		

Zone Summary

Zone wide Queuing Penalty: 13

Intersection: 7: Indian Street & Grove View Road

Movement	WB	WB	NB	NB	SB	SB	SB
Directions Served	L	R	T	TR	L	T	T
Maximum Queue (ft)	96	40	140	144	98	1332	1334
Average Queue (ft)	35	10	37	42	16	1053	1087
95th Queue (ft)	76	36	111	125	56	1758	1745
Link Distance (ft)		1265	123	123		1304	1304
Upstream Blk Time (%)			1	1		3	7
Queuing Penalty (veh)			4	7		30	71
Storage Bay Dist (ft)	210				120		
Storage Blk Time (%)						9	
Queuing Penalty (veh)						1	

Intersection: 8: Indian Street & Driveway 1/Driveway

Movement	EB	WB	NB	NB	NB	SB	SB	SB
Directions Served	LTR	LTR	L	T	TR	L	T	TR
Maximum Queue (ft)	153	73	46	92	104	18	182	159
Average Queue (ft)	121	26	10	5	11	1	54	123
95th Queue (ft)	194	70	33	37	56	9	153	181
Link Distance (ft)	138	218		296	296		123	123
Upstream Blk Time (%)	73						2	16
Queuing Penalty (veh)	0						18	168
Storage Bay Dist (ft)			100			50		
Storage Blk Time (%)				0		0	3	
Queuing Penalty (veh)				0		0	0	

Intersection: 9: Indian Street & Driveway 2

Movement	EB	NB	SB	SB
Directions Served	LR	L	T	TR
Maximum Queue (ft)	170	66	324	326
Average Queue (ft)	150	21	192	294
95th Queue (ft)	191	53	369	388
Link Distance (ft)	154		296	296
Upstream Blk Time (%)	90		2	19
Queuing Penalty (veh)	0		17	200
Storage Bay Dist (ft)		100		
Storage Blk Time (%)		0		
Queuing Penalty (veh)		1		

Zone Summary

Zone wide Queuing Penalty: 517

APPENDIX 3.1:

EXISTING TRAFFIC COUNTS – DECEMBER 2015

This Page Intentionally Left Blank

Counts Unlimited
PO Box 1178
Corona, CA 92878
(951) 268-6268

City of Perris
N/S: I-215 Southbound Ramps
E/W: Harley Knox Boulevard
Weather: Clear

File Name : PER215SHAAM
Site Code : 05115699
Start Date : 12/16/2015
Page No : 1

Groups Printed- Passenger Vehicles - Large 2 Axle Vehicles - 3 Axle Vehicles - 4+ Axle Trucks

	I-Southbound Off Ramp Southbound					Harley Knox Boulevard Westbound					I-215 Southbound On Ramp Northbound					Harley Knox Boulevard Eastbound							
Start Time	Left	Thru	Right	RTOR	App. Total	Left	Thru	Right	RTOR	App. Total	Left	Thru	Right	RTOR	App. Total	Left	Thru	Right	RTOR	App. Total	Exclu. Total	Inclu. Total	Int. Total
07:00 AM	56	0	28	8	84	33	100	0	0	133	0	0	0	0	0	0	130	0	0	130	8	347	355
07:15 AM	63	0	31	16	94	26	45	0	0	71	0	0	0	0	0	0	133	2	2	135	18	300	318
07:30 AM	77	3	36	24	116	43	25	0	0	68	0	0	0	0	0	0	149	2	1	151	25	335	360
07:45 AM	89	0	26	11	115	32	25	0	0	57	0	0	0	0	0	0	109	4	0	113	11	285	296
Total	285	3	121	59	409	134	195	0	0	329	0	0	0	0	0	0	521	8	3	529	62	1267	1329
08:00 AM	75	0	24	4	99	27	22	0	0	49	0	0	0	0	0	0	47	0	0	47	4	195	199
08:15 AM	40	0	24	8	64	19	18	0	0	37	0	0	0	0	0	0	39	2	2	41	10	142	152
08:30 AM	48	1	19	7	68	19	14	0	0	33	0	0	0	0	0	0	39	1	0	40	7	141	148
08:45 AM	50	0	33	10	83	20	15	0	0	35	0	0	0	0	0	0	28	0	0	28	10	146	156
Total	213	1	100	29	314	85	69	0	0	154	0	0	0	0	0	0	153	3	2	156	31	624	655
Grand Total	498	4	221	88	723	219	264	0	0	483	0	0	0	0	0	0	674	11	5	685	93	1891	1984
Apprch %	68.9	0.6	30.6			45.3	54.7	0			0	0	0			0	98.4	1.6					
Total %	26.3	0.2	11.7		38.2	11.6	14	0		25.5	0	0	0		0	0	35.6	0.6		36.2	4.7	95.3	
Passenger Vehicles	388	4	189		661	162	254	0		416	0	0	0		0	0	629	9		643	0	0	1720
% Passenger Vehicles	77.9	100	85.5	90.9	81.5	74	96.2	0	0	86.1	0	0	0	0	0	0	93.3	81.8	100	93.2	0	0	86.7
Large 2 Axle Vehicles	45	0	9		58	22	9	0		31	0	0	0		0	0	21	1		22	0	0	111
% Large 2 Axle Vehicles	9	0	4.1	4.5	7.2	10	3.4	0	0	6.4	0	0	0	0	0	0	3.1	9.1	0	3.2	0	0	5.6
3 Axle Vehicles	12	0	3		15	11	0	0		11	0	0	0		0	0	3	1		4	0	0	30
% 3 Axle Vehicles	2.4	0	1.4	0	1.8	5	0	0	0	2.3	0	0	0	0	0	0	0.4	9.1	0	0.6	0	0	1.5
4+ Axle Trucks	53	0	20		77	24	1	0		25	0	0	0		0	0	21	0		21	0	0	123
% 4+ Axle Trucks	10.6	0	9	4.5	9.5	11	0.4	0	0	5.2	0	0	0	0	0	0	3.1	0	0	3	0	0	6.2

	I-Southbound Off Ramp Southbound				Harley Knox Boulevard Westbound				I-215 Southbound On Ramp Northbound				Harley Knox Boulevard Eastbound				
Start Time	Left	Thru	Right	App. Total	Left	Thru	Right	App. Total	Left	Thru	Right	App. Total	Left	Thru	Right	App. Total	Int. Total
Peak Hour Analysis From 07:00 AM to 08:45 AM - Peak 1 of 1																	
Peak Hour for Entire Intersection Begins at 07:00 AM																	
07:00 AM	56	0	28	84	33	**100**	0	**133**	0	0	0	0	0	130	0	130	**347**
07:15 AM	63	0	31	94	26	45	0	71	0	0	0	0	0	133	2	135	300
07:30 AM	77	**3**	**36**	**116**	**43**	25	0	68	0	0	0	0	0	**149**	2	**151**	335
07:45 AM	**89**	0	26	115	32	25	0	57	0	0	0	0	0	109	**4**	113	285
Total Volume	285	3	121	409	134	195	0	329	0	0	0	0	0	521	8	529	1267
% App. Total	69.7	0.7	29.6		40.7	59.3	0		0	0	0		0	98.5	1.5		
PHF	.801	.250	.840	.881	.779	.488	.000	.618	.000	.000	.000	.000	.000	.874	.500	.876	.913

Counts Unlimited
PO Box 1178
Corona, CA 92878
(951) 268-6268

City of Perris
N/S: I-215 Southbound Ramps
E/W: Harley Knox Boulevard
Weather: Clear

File Name : PER215SHAAM
Site Code : 05115699
Start Date : 12/16/2015
Page No : 2

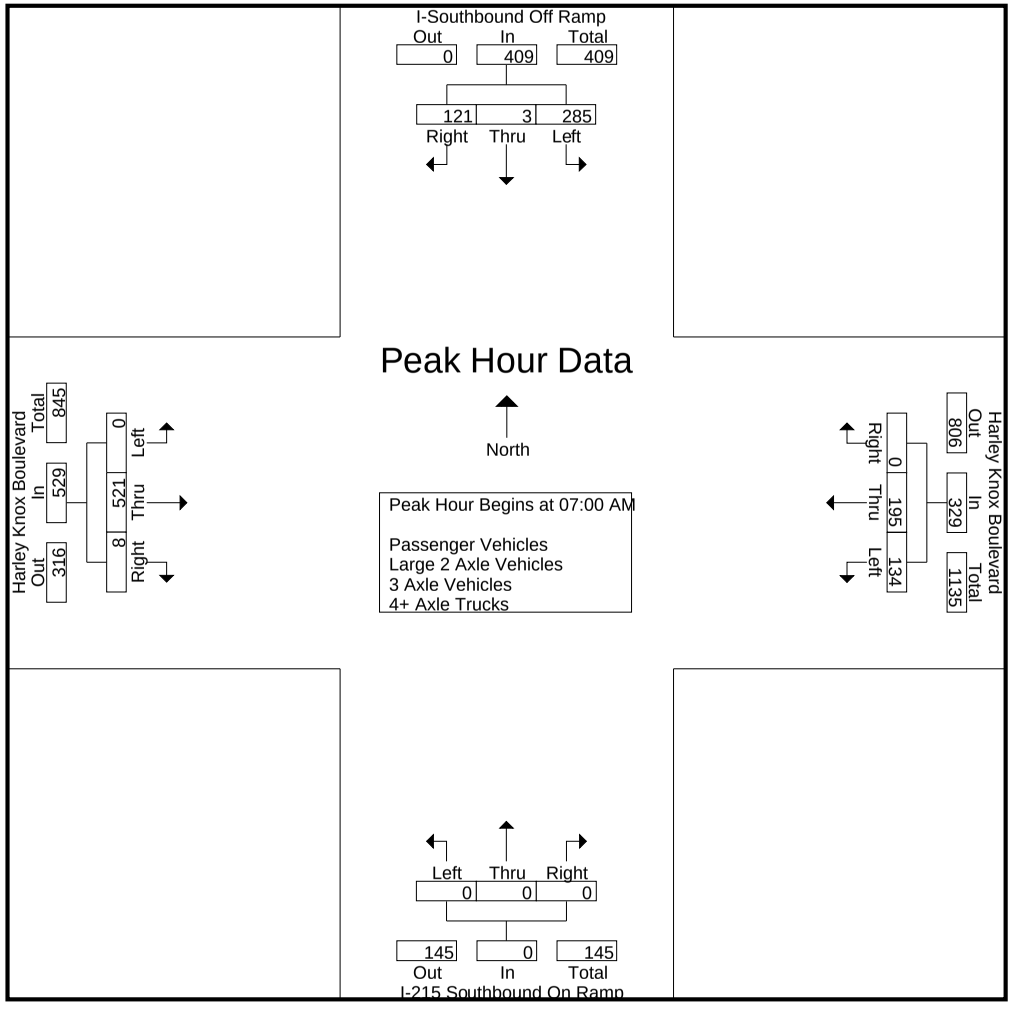

Counts Unlimited
PO Box 1178
Corona, CA 92878
(951) 268-6268

City of Perris
N/S: I-215 Southbound Ramps
E/W: Harley Knox Boulevard
Weather: Clear

File Name : PER215SHAAM
Site Code : 05115699
Start Date : 12/16/2015
Page No : 3

	I-Southbound Off Ramp Southbound				Harley Knox Boulevard Westbound				I-215 Southbound On Ramp Northbound				Harley Knox Boulevard Eastbound				
Start Time	Left	Thru	Right	App. Total	Left	Thru	Right	App. Total	Left	Thru	Right	App. Total	Left	Thru	Right	App. Total	Int. Total
Peak Hour Analysis From 07:00 AM to 08:45 AM - Peak 1 of 1																	
Peak Hour for Each Approach Begins at:																	
	07:15 AM				07:00 AM				07:00 AM				07:00 AM				
+0 mins.	63	0	31	94	33	**100**	0	**133**	0	0	0	0	0	130	0	130	
+15 mins.	77	**3**	**36**	**116**	26	45	0	71	0	0	0	0	0	133	2	135	
+30 mins.	**89**	0	26	115	**43**	25	0	68	0	0	0	0	0	**149**	2	**151**	
+45 mins.	75	0	24	99	32	25	0	57	0	0	0	0	0	109	**4**	113	
Total Volume	304	3	117	424	134	195	0	329	0	0	0	0	0	521	8	529	
% App. Total	71.7	0.7	27.6		40.7	59.3	0		0	0	0		0	98.5	1.5		
PHF	.854	.250	.813	.914	.779	.488	.000	.618	.000	.000	.000	.000	.000	.874	.500	.876	

Counts Unlimited
PO Box 1178
Corona, CA 92878
(951) 268-6268

City of Perris
N/S: I-215 Southbound Ramps
E/W: Harley Knox Boulevard
Weather: Clear

File Name : PER215SHAAM
Site Code : 05115699
Start Date : 12/16/2015
Page No : 1

Groups Printed- Passenger Vehicles

	I-Southbound Off Ramp Southbound					Harley Knox Boulevard Westbound					I-215 Southbound On Ramp Northbound					Harley Knox Boulevard Eastbound							
Start Time	Left	Thru	Right	RTOR	App. Total	Left	Thru	Right	RTOR	App. Total	Left	Thru	Right	RTOR	App. Total	Left	Thru	Right	RTOR	App. Total	Exclu. Total	Inclu. Total	Int. Total
07:00 AM	43	0	26	8	69	26	98	0	0	124	0	0	0	0	0	0	128	0	0	128	8	321	329
07:15 AM	48	0	27	15	75	21	44	0	0	65	0	0	0	0	0	0	122	2	2	124	17	264	281
07:30 AM	63	3	32	21	98	35	25	0	0	60	0	0	0	0	0	0	143	2	1	145	22	303	325
07:45 AM	76	0	24	10	100	26	25	0	0	51	0	0	0	0	0	0	101	2	0	103	10	254	264
Total	230	3	109	54	342	108	192	0	0	300	0	0	0	0	0	0	494	6	3	500	57	1142	1199
08:00 AM	60	0	19	4	79	18	20	0	0	38	0	0	0	0	0	0	41	0	0	41	4	158	162
08:15 AM	28	0	21	7	49	12	17	0	0	29	0	0	0	0	0	0	36	2	2	38	9	116	125
08:30 AM	34	1	13	5	48	8	12	0	0	20	0	0	0	0	0	0	33	1	0	34	5	102	107
08:45 AM	36	0	27	10	63	16	13	0	0	29	0	0	0	0	0	0	25	0	0	25	10	117	127
Total	158	1	80	26	239	54	62	0	0	116	0	0	0	0	0	0	135	3	2	138	28	493	521
Grand Total	388	4	189	80	581	162	254	0	0	416	0	0	0	0	0	0	629	9	5	638	85	1635	1720
Apprch %	66.8	0.7	32.5			38.9	61.1	0			0	0	0			0	98.6	1.4					
Total %	23.7	0.2	11.6		35.5	9.9	15.5	0		25.4	0	0	0		0	0	38.5	0.6		39	4.9	95.1	

	I-Southbound Off Ramp Southbound				Harley Knox Boulevard Westbound				I-215 Southbound On Ramp Northbound				Harley Knox Boulevard Eastbound				
Start Time	Left	Thru	Right	App. Total	Left	Thru	Right	App. Total	Left	Thru	Right	App. Total	Left	Thru	Right	App. Total	Int. Total
Peak Hour Analysis From 07:00 AM to 07:45 AM - Peak 1 of 1																	
Peak Hour for Entire Intersection Begins at 07:00 AM																	
07:00 AM	43	0	26	69	26	**98**	0	**124**	0	0	0	0	0	128	0	128	**321**
07:15 AM	48	0	27	75	21	44	0	65	0	0	0	0	0	122	**2**	124	264
07:30 AM	63	**3**	**32**	98	**35**	25	0	60	0	0	0	0	0	**143**	2	**145**	303
07:45 AM	**76**	0	24	**100**	26	25	0	51	0	0	0	0	0	101	2	103	254
Total Volume	230	3	109	342	108	192	0	300	0	0	0	0	0	494	6	500	1142
% App. Total	67.3	0.9	31.9		36	64	0		0	0	0		0	98.8	1.2		
PHF	.757	.250	.852	.855	.771	.490	.000	.605	.000	.000	.000	.000	.000	.864	.750	.862	.889

Counts Unlimited
PO Box 1178
Corona, CA 92878
(951) 268-6268

City of Perris
N/S: I-215 Southbound Ramps
E/W: Harley Knox Boulevard
Weather: Clear

File Name : PER215SHAAM
Site Code : 05115699
Start Date : 12/16/2015
Page No : 2

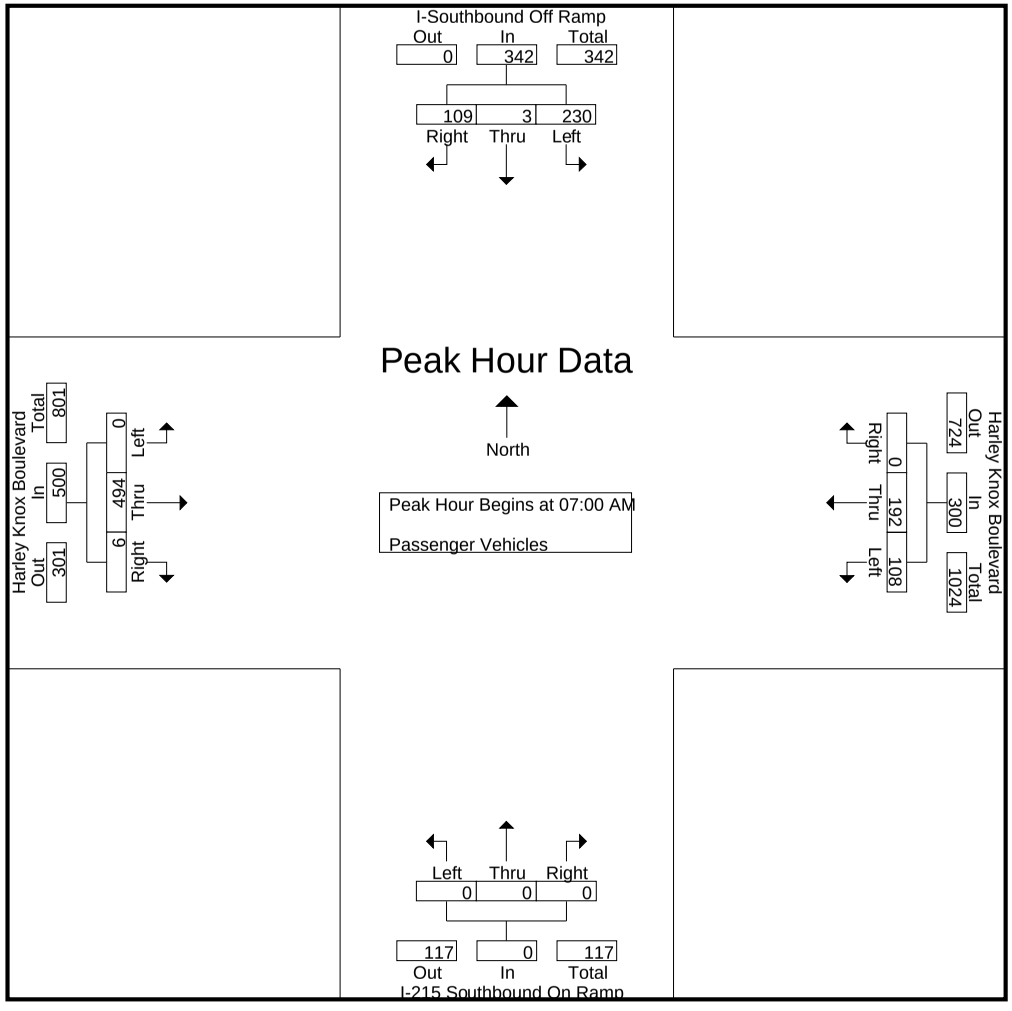

Counts Unlimited
PO Box 1178
Corona, CA 92878
(951) 268-6268

City of Perris
N/S: I-215 Southbound Ramps
E/W: Harley Knox Boulevard
Weather: Clear

File Name : PER215SHAAM
Site Code : 05115699
Start Date : 12/16/2015
Page No : 3

	I-Southbound Off Ramp Southbound				Harley Knox Boulevard Westbound				I-215 Southbound On Ramp Northbound				Harley Knox Boulevard Eastbound				
Start Time	Left	Thru	Right	App. Total	Left	Thru	Right	App. Total	Left	Thru	Right	App. Total	Left	Thru	Right	App. Total	Int. Total
Peak Hour Analysis From 07:00 AM to 07:45 AM - Peak 1 of 1																	
Peak Hour for Each Approach Begins at:																	
	07:00 AM				07:00 AM				07:00 AM				07:00 AM				
+0 mins.	43	0	26	69	26	**98**	0	**124**	0	0	0	0	0	128	0	128	
+15 mins.	48	0	27	75	21	44	0	65	0	0	0	0	0	122	**2**	124	
+30 mins.	63	**3**	**32**	98	**35**	25	0	60	0	0	0	0	0	**143**	2	**145**	
+45 mins.	**76**	0	24	**100**	26	25	0	51	0	0	0	0	0	101	2	103	
Total Volume	230	3	109	342	108	192	0	300	0	0	0	0	0	494	6	500	
% App. Total	67.3	0.9	31.9		36	64	0		0	0	0		0	98.8	1.2		
PHF	.757	.250	.852	.855	.771	.490	.000	.605	.000	.000	.000	.000	.000	.864	.750	.862	

Counts Unlimited
PO Box 1178
Corona, CA 92878
(951) 268-6268

City of Perris
N/S: I-215 Southbound Ramps
E/W: Harley Knox Boulevard
Weather: Clear

File Name : PER215SHAAM
Site Code : 05115699
Start Date : 12/16/2015
Page No : 1

Groups Printed- Large 2 Axle Vehicles

	I-Southbound Off Ramp Southbound					Harley Knox Boulevard Westbound					I-215 Southbound On Ramp Northbound					Harley Knox Boulevard Eastbound							
Start Time	Left	Thru	Right	RTOR	App. Total	Left	Thru	Right	RTOR	App. Total	Left	Thru	Right	RTOR	App. Total	Left	Thru	Right	RTOR	App. Total	Exclu. Total	Inclu. Total	Int. Total
07:00 AM	4	0	0	0	4	3	2	0	0	5	0	0	0	0	0	0	2	0	0	2	0	11	11
07:15 AM	6	0	0	0	6	2	1	0	0	3	0	0	0	0	0	0	4	0	0	4	0	13	13
07:30 AM	6	0	2	2	8	1	0	0	0	1	0	0	0	0	0	0	1	0	0	1	2	10	12
07:45 AM	6	0	0	0	6	3	0	0	0	3	0	0	0	0	0	0	4	1	0	5	0	14	14
Total	22	0	2	2	24	9	3	0	0	12	0	0	0	0	0	0	11	1	0	12	2	48	50
08:00 AM	7	0	1	0	8	3	2	0	0	5	0	0	0	0	0	0	4	0	0	4	0	17	17
08:15 AM	7	0	0	0	7	3	1	0	0	4	0	0	0	0	0	0	1	0	0	1	0	12	12
08:30 AM	6	0	3	2	9	5	2	0	0	7	0	0	0	0	0	0	5	0	0	5	2	21	23
08:45 AM	3	0	3	0	6	2	1	0	0	3	0	0	0	0	0	0	0	0	0	0	0	9	9
Total	23	0	7	2	30	13	6	0	0	19	0	0	0	0	0	0	10	0	0	10	2	59	61
Grand Total	45	0	9	4	54	22	9	0	0	31	0	0	0	0	0	0	21	1	0	22	4	107	111
Apprch %	83.3	0	16.7			71	29	0			0	0	0			0	95.5	4.5					
Total %	42.1	0	8.4		50.5	20.6	8.4	0		29	0	0	0		0	0	19.6	0.9		20.6	3.6	96.4	

	I-Southbound Off Ramp Southbound				Harley Knox Boulevard Westbound				I-215 Southbound On Ramp Northbound				Harley Knox Boulevard Eastbound				
Start Time	Left	Thru	Right	App. Total	Left	Thru	Right	App. Total	Left	Thru	Right	App. Total	Left	Thru	Right	App. Total	Int. Total
Peak Hour Analysis From 07:00 AM to 07:45 AM - Peak 1 of 1																	
Peak Hour for Entire Intersection Begins at 07:00 AM																	
07:00 AM	4	0	0	4	**3**	**2**	0	**5**	0	0	0	0	0	2	0	2	11
07:15 AM	**6**	0	0	6	2	1	0	3	0	0	0	0	0	**4**	0	4	13
07:30 AM	6	0	**2**	**8**	1	0	0	1	0	0	0	0	0	1	0	1	10
07:45 AM	6	0	0	6	3	0	0	3	0	0	0	0	0	4	**1**	**5**	**14**
Total Volume	22	0	2	24	9	3	0	12	0	0	0	0	0	11	1	12	48
% App. Total	91.7	0	8.3		75	25	0		0	0	0		0	91.7	8.3		
PHF	.917	.000	.250	.750	.750	.375	.000	.600	.000	.000	.000	.000	.000	.688	.250	.600	.857

Counts Unlimited
PO Box 1178
Corona, CA 92878
(951) 268-6268

City of Perris
N/S: I-215 Southbound Ramps
E/W: Harley Knox Boulevard
Weather: Clear

File Name : PER215SHAAM
Site Code : 05115699
Start Date : 12/16/2015
Page No : 2

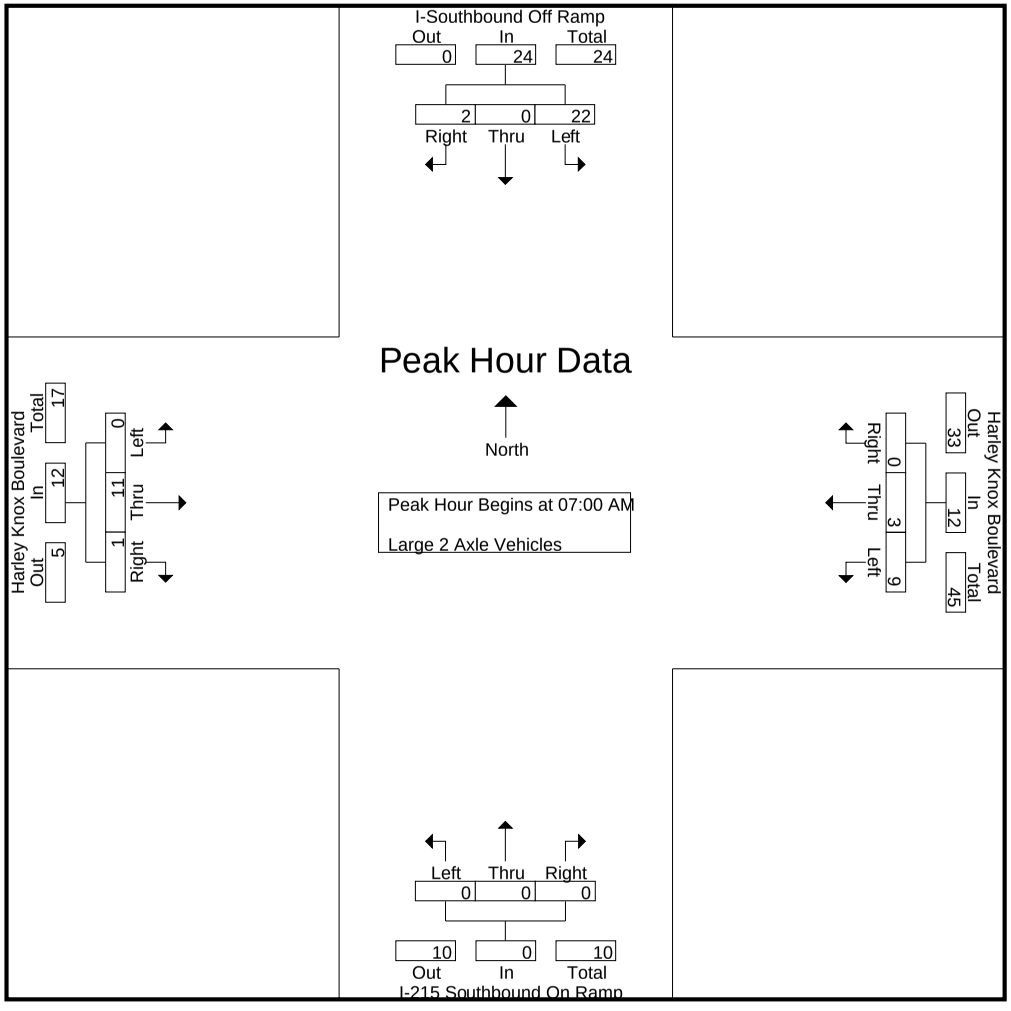

Counts Unlimited
PO Box 1178
Corona, CA 92878
(951) 268-6268

City of Perris
N/S: I-215 Southbound Ramps
E/W: Harley Knox Boulevard
Weather: Clear

File Name : PER215SHAAM
Site Code : 05115699
Start Date : 12/16/2015
Page No : 3

	I-Southbound Off Ramp Southbound				Harley Knox Boulevard Westbound				I-215 Southbound On Ramp Northbound				Harley Knox Boulevard Eastbound				
Start Time	Left	Thru	Right	App. Total	Left	Thru	Right	App. Total	Left	Thru	Right	App. Total	Left	Thru	Right	App. Total	Int. Total
Peak Hour Analysis From 07:00 AM to 07:45 AM - Peak 1 of 1																	
Peak Hour for Each Approach Begins at:																	
	07:00 AM				07:00 AM				07:00 AM				07:00 AM				
+0 mins.	4	0	0	4	**3**	**2**	0	**5**	0	0	0	0	0	2	0	2	
+15 mins.	**6**	0	0	6	2	1	0	3	0	0	0	0	0	**4**	0	4	
+30 mins.	6	0	**2**	**8**	1	0	0	1	0	0	0	0	0	1	0	1	
+45 mins.	6	0	0	6	3	0	0	3	0	0	0	0	0	4	**1**	**5**	
Total Volume	22	0	2	24	9	3	0	12	0	0	0	0	0	11	1	12	
% App. Total	91.7	0	8.3		75	25	0		0	0	0		0	91.7	8.3		
PHF	.917	.000	.250	.750	.750	.375	.000	.600	.000	.000	.000	.000	.000	.688	.250	.600	

Counts Unlimited
PO Box 1178
Corona, CA 92878
(951) 268-6268

City of Perris
N/S: I-215 Southbound Ramps
E/W: Harley Knox Boulevard
Weather: Clear

File Name : PER215SHAAM
Site Code : 05115699
Start Date : 12/16/2015
Page No : 1

Groups Printed- 3 Axle Vehicles

	I-Southbound Off Ramp Southbound					Harley Knox Boulevard Westbound					I-215 Southbound On Ramp Northbound					Harley Knox Boulevard Eastbound							
Start Time	Left	Thru	Right	RTOR	App. Total	Left	Thru	Right	RTOR	App. Total	Left	Thru	Right	RTOR	App. Total	Left	Thru	Right	RTOR	App. Total	Exclu. Total	Inclu. Total	Int. Total
07:00 AM	1	0	1	0	2	1	0	0	0	1	0	0	0	0	0	0	0	0	0	0	0	3	3
07:15 AM	0	0	0	0	0	1	0	0	0	1	0	0	0	0	0	0	1	0	0	1	0	2	2
07:30 AM	3	0	1	0	4	1	0	0	0	1	0	0	0	0	0	0	1	0	0	1	0	6	6
07:45 AM	1	0	0	0	1	1	0	0	0	1	0	0	0	0	0	0	1	1	0	2	0	4	4
Total	5	0	2	0	7	4	0	0	0	4	0	0	0	0	0	0	3	1	0	4	0	15	15
08:00 AM	0	0	0	0	0	1	0	0	0	1	0	0	0	0	0	0	0	0	0	0	0	1	1
08:15 AM	2	0	1	0	3	1	0	0	0	1	0	0	0	0	0	0	0	0	0	0	0	4	4
08:30 AM	4	0	0	0	4	5	0	0	0	5	0	0	0	0	0	0	0	0	0	0	0	9	9
08:45 AM	1	0	0	0	1	0	0	0	0	0	0	0	0	0	0	0	0	0	0	0	0	1	1
Total	7	0	1	0	8	7	0	0	0	7	0	0	0	0	0	0	0	0	0	0	0	15	15
Grand Total	12	0	3	0	15	11	0	0	0	11	0	0	0	0	0	0	3	1	0	4	0	30	30
Apprch %	80	0	20			100	0	0			0	0	0			0	75	25					
Total %	40	0	10		50	36.7	0	0		36.7	0	0	0		0	0	10	3.3		13.3	0	100	

	I-Southbound Off Ramp Southbound				Harley Knox Boulevard Westbound				I-215 Southbound On Ramp Northbound				Harley Knox Boulevard Eastbound				
Start Time	Left	Thru	Right	App. Total	Left	Thru	Right	App. Total	Left	Thru	Right	App. Total	Left	Thru	Right	App. Total	Int. Total
Peak Hour Analysis From 07:00 AM to 07:45 AM - Peak 1 of 1																	
Peak Hour for Entire Intersection Begins at 07:00 AM																	
07:00 AM	1	0	**1**	2	**1**	0	0	**1**	0	0	0	0	0	0	0	0	3
07:15 AM	0	0	0	0	1	0	0	1	0	0	0	0	0	**1**	0	1	2
07:30 AM	**3**	0	1	**4**	1	0	0	1	0	0	0	0	0	1	0	1	**6**
07:45 AM	1	0	0	1	1	0	0	1	0	0	0	0	0	1	**1**	**2**	4
Total Volume	5	0	2	7	4	0	0	4	0	0	0	0	0	3	1	4	15
% App. Total	71.4	0	28.6		100	0	0		0	0	0		0	75	25		
PHF	.417	.000	.500	.438	1.00	.000	.000	1.00	.000	.000	.000	.000	.000	.750	.250	.500	.625

Counts Unlimited
PO Box 1178
Corona, CA 92878
(951) 268-6268

City of Perris
N/S: I-215 Southbound Ramps
E/W: Harley Knox Boulevard
Weather: Clear

File Name : PER215SHAAM
Site Code : 05115699
Start Date : 12/16/2015
Page No : 2

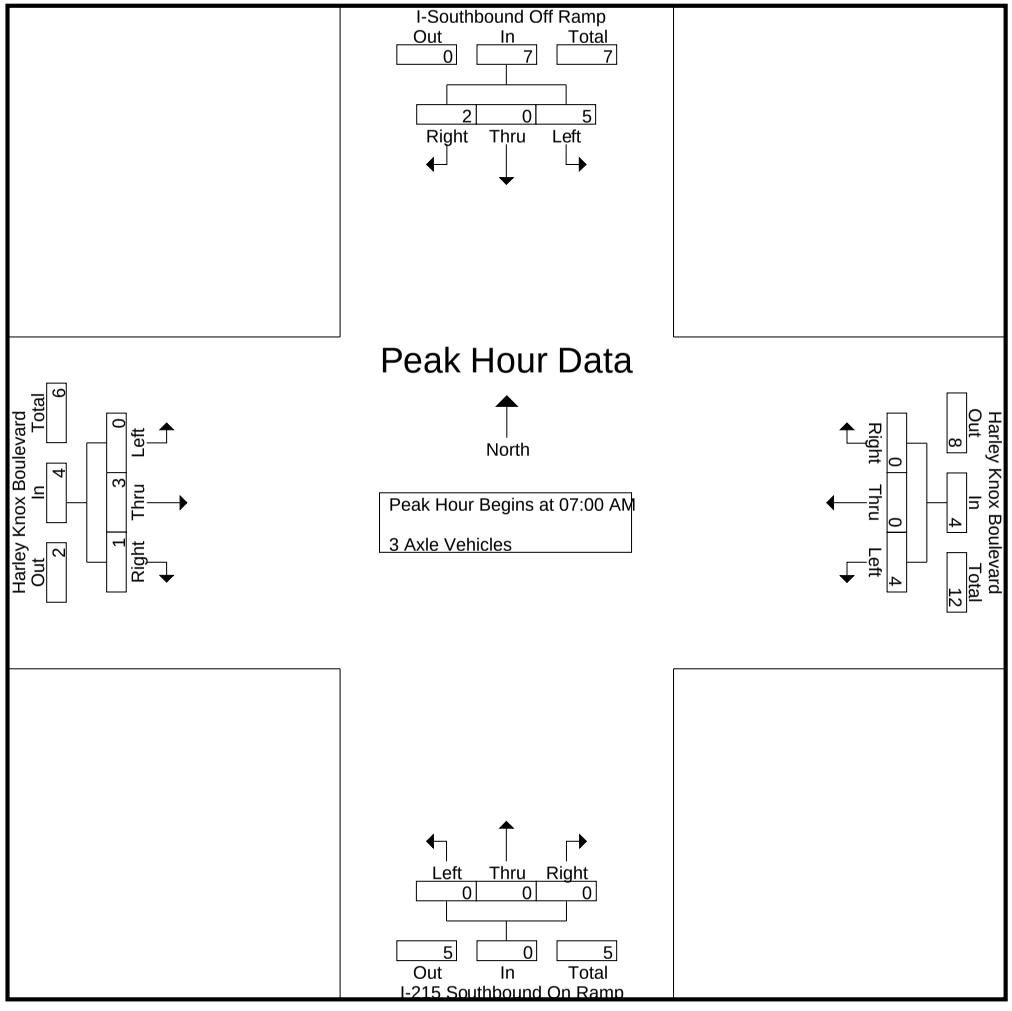

Counts Unlimited
PO Box 1178
Corona, CA 92878
(951) 268-6268

City of Perris
N/S: I-215 Southbound Ramps
E/W: Harley Knox Boulevard
Weather: Clear

File Name : PER215SHAAM
Site Code : 05115699
Start Date : 12/16/2015
Page No : 3

	I-Southbound Off Ramp Southbound				Harley Knox Boulevard Westbound				I-215 Southbound On Ramp Northbound				Harley Knox Boulevard Eastbound				
Start Time	Left	Thru	Right	App. Total	Left	Thru	Right	App. Total	Left	Thru	Right	App. Total	Left	Thru	Right	App. Total	Int. Total
Peak Hour Analysis From 07:00 AM to 07:45 AM - Peak 1 of 1																	
Peak Hour for Each Approach Begins at:																	
	07:00 AM				07:00 AM				07:00 AM				07:00 AM				
+0 mins.	1	0	**1**	2	**1**	0	0	**1**	0	0	0	0	0	0	0	0	
+15 mins.	0	0	0	0	1	0	0	1	0	0	0	0	0	**1**	0	1	
+30 mins.	**3**	0	1	**4**	1	0	0	1	0	0	0	0	0	1	0	1	
+45 mins.	1	0	0	1	1	0	0	1	0	0	0	0	0	1	**1**	**2**	
Total Volume	5	0	2	7	4	0	0	4	0	0	0	0	0	3	1	4	
% App. Total	71.4	0	28.6		100	0	0		0	0	0		0	75	25		
PHF	.417	.000	.500	.438	1.000	.000	.000	1.000	.000	.000	.000	.000	.000	.750	.250	.500	

Counts Unlimited
PO Box 1178
Corona, CA 92878
(951) 268-6268

City of Perris
N/S: I-215 Southbound Ramps
E/W: Harley Knox Boulevard
Weather: Clear

File Name : PER215SHAAM
Site Code : 05115699
Start Date : 12/16/2015
Page No : 1

Groups Printed- 4+ Axle Trucks

	I-Southbound Off Ramp Southbound					Harley Knox Boulevard Westbound					I-215 Southbound On Ramp Northbound					Harley Knox Boulevard Eastbound							
Start Time	Left	Thru	Right	RTOR	App. Total	Left	Thru	Right	RTOR	App. Total	Left	Thru	Right	RTOR	App. Total	Left	Thru	Right	RTOR	App. Total	Exclu. Total	Inclu. Total	Int. Total
07:00 AM	8	0	1	0	9	3	0	0	0	3	0	0	0	0	0	0	0	0	0	0	0	12	12
07:15 AM	9	0	4	1	13	2	0	0	0	2	0	0	0	0	0	0	6	0	0	6	1	21	22
07:30 AM	5	0	1	1	6	6	0	0	0	6	0	0	0	0	0	0	4	0	0	4	1	16	17
07:45 AM	6	0	2	1	8	2	0	0	0	2	0	0	0	0	0	0	3	0	0	3	1	13	14
Total	28	0	8	3	36	13	0	0	0	13	0	0	0	0	0	0	13	0	0	13	3	62	65
08:00 AM	8	0	4	0	12	5	0	0	0	5	0	0	0	0	0	0	2	0	0	2	0	19	19
08:15 AM	3	0	2	1	5	3	0	0	0	3	0	0	0	0	0	0	2	0	0	2	1	10	11
08:30 AM	4	0	3	0	7	1	0	0	0	1	0	0	0	0	0	0	1	0	0	1	0	9	9
08:45 AM	10	0	3	0	13	2	1	0	0	3	0	0	0	0	0	0	3	0	0	3	0	19	19
Total	25	0	12	1	37	11	1	0	0	12	0	0	0	0	0	0	8	0	0	8	1	57	58
Grand Total	53	0	20	4	73	24	1	0	0	25	0	0	0	0	0	0	21	0	0	21	4	119	123
Apprch %	72.6	0	27.4			96	4	0			0	0	0			0	100	0					
Total %	44.5	0	16.8		61.3	20.2	0.8	0		21	0	0	0		0	0	17.6	0		17.6	3.3	96.7	

	I-Southbound Off Ramp Southbound				Harley Knox Boulevard Westbound				I-215 Southbound On Ramp Northbound				Harley Knox Boulevard Eastbound				
Start Time	Left	Thru	Right	App. Total	Left	Thru	Right	App. Total	Left	Thru	Right	App. Total	Left	Thru	Right	App. Total	Int. Total
Peak Hour Analysis From 07:00 AM to 07:45 AM - Peak 1 of 1																	
Peak Hour for Entire Intersection Begins at 07:00 AM																	
07:00 AM	8	0	1	9	3	0	0	3	0	0	0	0	0	0	0	0	12
07:15 AM	**9**	0	**4**	**13**	2	0	0	2	0	0	0	0	0	**6**	0	**6**	**21**
07:30 AM	5	0	1	6	**6**	0	0	**6**	0	0	0	0	0	4	0	4	16
07:45 AM	6	0	2	8	2	0	0	2	0	0	0	0	0	3	0	3	13
Total Volume	28	0	8	36	13	0	0	13	0	0	0	0	0	13	0	13	62
% App. Total	77.8	0	22.2		100	0	0		0	0	0		0	100	0		
PHF	.778	.000	.500	.692	.542	.000	.000	.542	.000	.000	.000	.000	.000	.542	.000	.542	.738

Counts Unlimited
PO Box 1178
Corona, CA 92878
(951) 268-6268

City of Perris
N/S: I-215 Southbound Ramps
E/W: Harley Knox Boulevard
Weather: Clear

File Name : PER215SHAAM
Site Code : 05115699
Start Date : 12/16/2015
Page No : 2

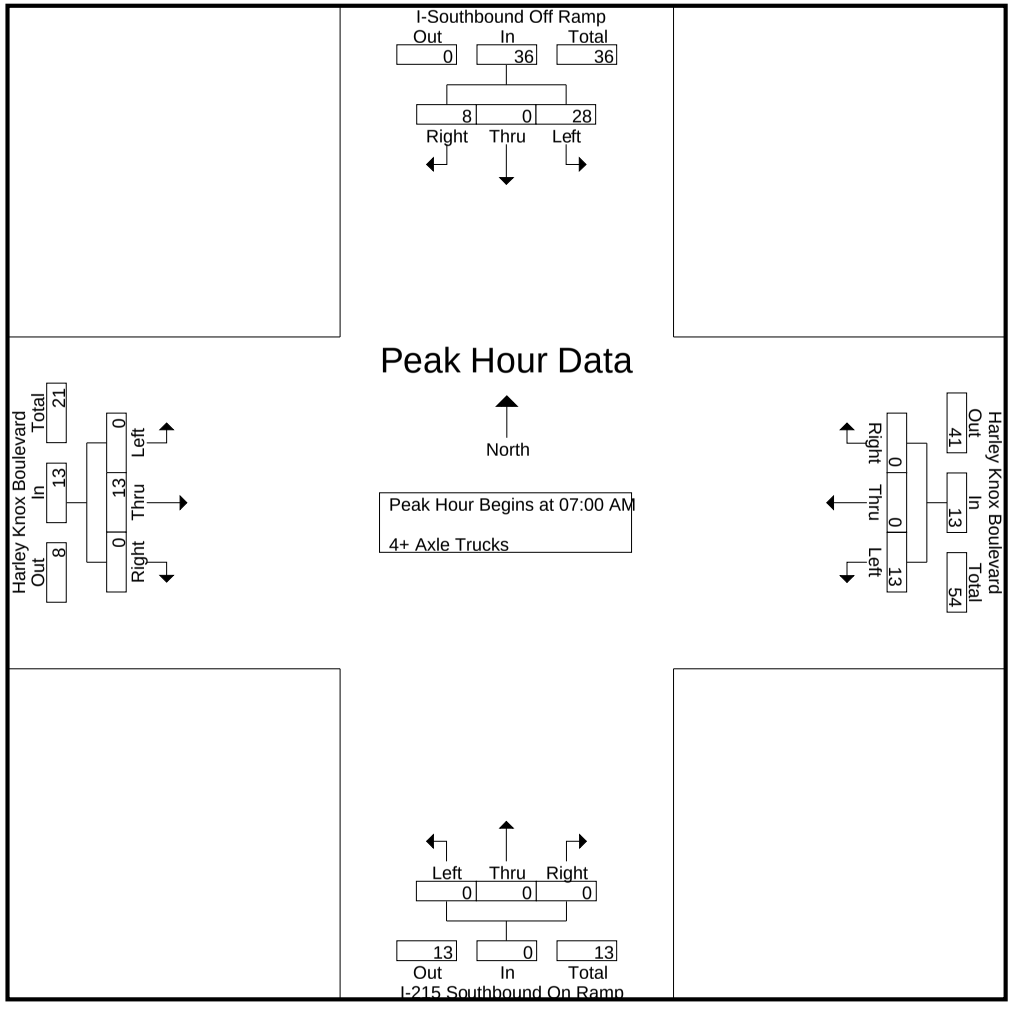

Counts Unlimited
PO Box 1178
Corona, CA 92878
(951) 268-6268

City of Perris
N/S: I-215 Southbound Ramps
E/W: Harley Knox Boulevard
Weather: Clear

File Name : PER215SHAAM
Site Code : 05115699
Start Date : 12/16/2015
Page No : 3

	I-Southbound Off Ramp Southbound				Harley Knox Boulevard Westbound				I-215 Southbound On Ramp Northbound				Harley Knox Boulevard Eastbound				
Start Time	Left	Thru	Right	App. Total	Left	Thru	Right	App. Total	Left	Thru	Right	App. Total	Left	Thru	Right	App. Total	Int. Total
Peak Hour Analysis From 07:00 AM to 07:45 AM - Peak 1 of 1																	
Peak Hour for Each Approach Begins at:																	
	07:00 AM				07:00 AM				07:00 AM				07:00 AM				
+0 mins.	8	0	1	9	3	0	0	3	0	0	0	0	0	0	0	0	
+15 mins.	**9**	0	**4**	**13**	2	0	0	2	0	0	0	0	0	**6**	0	**6**	
+30 mins.	5	0	1	6	**6**	0	0	**6**	0	0	0	0	0	4	0	4	
+45 mins.	6	0	2	8	2	0	0	2	0	0	0	0	0	3	0	3	
Total Volume	28	0	8	36	13	0	0	13	0	0	0	0	0	13	0	13	
% App. Total	77.8	0	22.2		100	0	0		0	0	0		0	100	0		
PHF	.778	.000	.500	.692	.542	.000	.000	.542	.000	.000	.000	.000	.000	.542	.000	.542	

Counts Unlimited
PO Box 1178
Corona, CA 92878
(951) 268-6268

City of Perris
N/S: I-215 Southbound Ramps
E/W: Harley Knox Boulevard
Weather: Clear

File Name : PER215SHAPM
Site Code : 05115699
Start Date : 12/16/2015
Page No : 1

Groups Printed- Passenger Vehicles - Large 2 Axle Vehicles - 3 Axle Vehicles - 4+ Axle Trucks

	I-Southbound Off Ramp Southbound					Harley Knox Boulevard Westbound					I-215 Southbound On Ramp Northbound					Harley Knox Boulevard Eastbound							
Start Time	Left	Thru	Right	RTOR	App. Total	Left	Thru	Right	RTOR	App. Total	Left	Thru	Right	RTOR	App. Total	Left	Thru	Right	RTOR	App. Total	Exclu. Total	Inclu. Total	Int. Total
04:00 PM	64	2	38	13	104	33	26	0	0	59	0	0	0	0	0	0	80	4	1	84	14	247	261
04:15 PM	68	0	47	15	115	21	30	0	0	51	0	0	0	0	0	0	88	4	0	92	15	258	273
04:30 PM	86	0	33	12	119	52	27	0	0	79	0	0	0	0	0	0	105	17	6	122	18	320	338
04:45 PM	76	1	46	24	123	63	30	0	0	93	0	0	0	0	0	0	79	8	2	87	26	303	329
Total	294	3	164	64	461	169	113	0	0	282	0	0	0	0	0	0	352	33	9	385	73	1128	1201
05:00 PM	57	0	40	17	97	39	25	0	0	64	0	0	0	0	0	0	74	4	1	78	18	239	257
05:15 PM	61	0	50	15	111	30	21	0	0	51	0	0	0	0	0	0	49	2	0	51	15	213	228
05:30 PM	98	0	51	21	149	39	29	0	0	68	0	0	0	0	0	0	57	3	2	60	23	277	300
05:45 PM	76	0	47	20	123	40	30	0	0	70	0	0	0	0	0	0	70	1	0	71	20	264	284
Total	292	0	188	73	480	148	105	0	0	253	0	0	0	0	0	0	250	10	3	260	76	993	1069
Grand Total	586	3	352	137	941	317	218	0	0	535	0	0	0	0	0	0	602	43	12	645	149	2121	2270
Apprch %	62.3	0.3	37.4			59.3	40.7	0			0	0	0			0	93.3	6.7					
Total %	27.6	0.1	16.6		44.4	14.9	10.3	0		25.2	0	0	0		0	0	28.4	2		30.4	6.6	93.4	
Passenger Vehicles	501	3	328		963	301	204	0		505	0	0	0		0	0	566	42		619	0	0	2087
% Passenger Vehicles	85.5	100	93.2	95.6	89.3	95	93.6	0	0	94.4	0	0	0	0	0	0	94	97.7	91.7	94.2	0	0	91.9
Large 2 Axle Vehicles	26	0	10		39	6	2	0		8	0	0	0		0	0	12	1		14	0	0	61
% Large 2 Axle Vehicles	4.4	0	2.8	2.2	3.6	1.9	0.9	0	0	1.5	0	0	0	0	0	0	2	2.3	8.3	2.1	0	0	2.7
3 Axle Vehicles	19	0	3		23	0	1	0		1	0	0	0		0	0	5	0		5	0	0	29
% 3 Axle Vehicles	3.2	0	0.9	0.7	2.1	0	0.5	0	0	0.2	0	0	0	0	0	0	0.8	0	0	0.8	0	0	1.3
4+ Axle Trucks	40	0	11		53	10	11	0		21	0	0	0		0	0	19	0		19	0	0	93
% 4+ Axle Trucks	6.8	0	3.1	1.5	4.9	3.2	5	0	0	3.9	0	0	0	0	0	0	3.2	0	0	2.9	0	0	4.1

	I-Southbound Off Ramp Southbound				Harley Knox Boulevard Westbound				I-215 Southbound On Ramp Northbound				Harley Knox Boulevard Eastbound				
Start Time	Left	Thru	Right	App. Total	Left	Thru	Right	App. Total	Left	Thru	Right	App. Total	Left	Thru	Right	App. Total	Int. Total
Peak Hour Analysis From 04:00 PM to 05:45 PM - Peak 1 of 1																	
Peak Hour for Entire Intersection Begins at 04:00 PM																	
04:00 PM	64	**2**	38	104	33	26	0	59	0	0	0	0	0	80	4	84	247
04:15 PM	68	0	**47**	115	21	**30**	0	51	0	0	0	0	0	88	4	92	258
04:30 PM	**86**	0	33	119	52	27	0	79	0	0	0	0	0	**105**	**17**	**122**	**320**
04:45 PM	76	1	46	**123**	**63**	30	0	**93**	0	0	0	0	0	79	8	87	303
Total Volume	294	3	164	461	169	113	0	282	0	0	0	0	0	352	33	385	1128
% App. Total	63.8	0.7	35.6		59.9	40.1	0		0	0	0		0	91.4	8.6		
PHF	.855	.375	.872	.937	.671	.942	.000	.758	.000	.000	.000	.000	.000	.838	.485	.789	.881

Counts Unlimited
PO Box 1178
Corona, CA 92878
(951) 268-6268

City of Perris
N/S: I-215 Southbound Ramps
E/W: Harley Knox Boulevard
Weather: Clear

File Name : PER215SHAPM
Site Code : 05115699
Start Date : 12/16/2015
Page No : 2

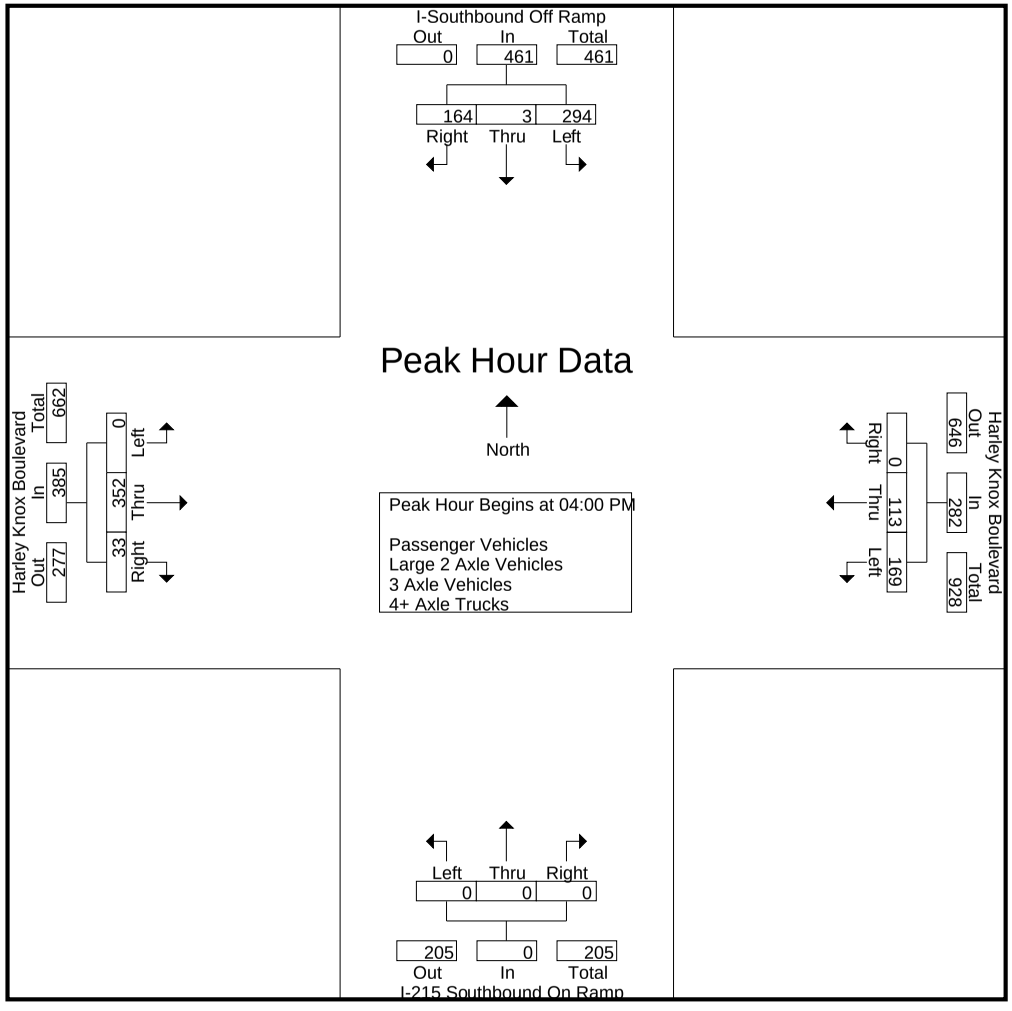

Counts Unlimited
PO Box 1178
Corona, CA 92878
(951) 268-6268

City of Perris
N/S: I-215 Southbound Ramps
E/W: Harley Knox Boulevard
Weather: Clear

File Name : PER215SHAPM
Site Code : 05115699
Start Date : 12/16/2015
Page No : 3

	I-Southbound Off Ramp Southbound				Harley Knox Boulevard Westbound				I-215 Southbound On Ramp Northbound				Harley Knox Boulevard Eastbound				
Start Time	Left	Thru	Right	App. Total	Left	Thru	Right	App. Total	Left	Thru	Right	App. Total	Left	Thru	Right	App. Total	Int. Total
Peak Hour Analysis From 04:00 PM to 05:45 PM - Peak 1 of 1																	
Peak Hour for Each Approach Begins at:																	
	04:45 PM				04:15 PM				04:00 PM				04:00 PM				
+0 mins.	76	**1**	46	123	21	**30**	0	51	0	0	0	0	0	80	4	84	
+15 mins.	57	0	40	97	52	27	0	79	0	0	0	0	0	88	4	92	
+30 mins.	61	0	50	111	**63**	30	0	**93**	0	0	0	0	0	**105**	**17**	**122**	
+45 mins.	**98**	0	**51**	**149**	39	25	0	64	0	0	0	0	0	79	8	87	
Total Volume	292	1	187	480	175	112	0	287	0	0	0	0	0	352	33	385	
% App. Total	60.8	0.2	39		61	39	0		0	0	0		0	91.4	8.6		
PHF	.745	.250	.917	.805	.694	.933	.000	.772	.000	.000	.000	.000	.000	.838	.485	.789	

Counts Unlimited
PO Box 1178
Corona, CA 92878
(951) 268-6268

City of Perris
N/S: I-215 Southbound Ramps
E/W: Harley Knox Boulevard
Weather: Clear

File Name : PER215SHAPM
Site Code : 05115699
Start Date : 12/16/2015
Page No : 1

Groups Printed- Passenger Vehicles

	I-Southbound Off Ramp Southbound					Harley Knox Boulevard Westbound					I-215 Southbound On Ramp Northbound					Harley Knox Boulevard Eastbound							
Start Time	Left	Thru	Right	RTOR	App. Total	Left	Thru	Right	RTOR	App. Total	Left	Thru	Right	RTOR	App. Total	Left	Thru	Right	RTOR	App. Total	Exclu. Total	Inclu. Total	Int. Total
04:00 PM	54	2	33	12	89	30	25	0	0	55	0	0	0	0	0	0	70	4	1	74	13	218	231
04:15 PM	58	0	45	14	103	19	28	0	0	47	0	0	0	0	0	0	81	4	0	85	14	235	249
04:30 PM	68	0	27	11	95	47	23	0	0	70	0	0	0	0	0	0	103	17	6	120	17	285	302
04:45 PM	61	1	45	24	107	61	29	0	0	90	0	0	0	0	0	0	78	8	2	86	26	283	309
Total	241	3	150	61	394	157	105	0	0	262	0	0	0	0	0	0	332	33	9	365	70	1021	1091
05:00 PM	47	0	38	17	85	39	21	0	0	60	0	0	0	0	0	0	71	4	1	75	18	220	238
05:15 PM	53	0	46	13	99	29	21	0	0	50	0	0	0	0	0	0	46	2	0	48	13	197	210
05:30 PM	89	0	50	21	139	37	29	0	0	66	0	0	0	0	0	0	51	2	1	53	22	258	280
05:45 PM	71	0	44	19	115	39	28	0	0	67	0	0	0	0	0	0	66	1	0	67	19	249	268
Total	260	0	178	70	438	144	99	0	0	243	0	0	0	0	0	0	234	9	2	243	72	924	996
Grand Total	501	3	328	131	832	301	204	0	0	505	0	0	0	0	0	0	566	42	11	608	142	1945	2087
Apprch %	60.2	0.4	39.4			59.6	40.4	0			0	0	0			0	93.1	6.9					
Total %	25.8	0.2	16.9		42.8	15.5	10.5	0		26	0	0	0		0	0	29.1	2.2		31.3	6.8	93.2	

	I-Southbound Off Ramp Southbound				Harley Knox Boulevard Westbound				I-215 Southbound On Ramp Northbound				Harley Knox Boulevard Eastbound				
Start Time	Left	Thru	Right	App. Total	Left	Thru	Right	App. Total	Left	Thru	Right	App. Total	Left	Thru	Right	App. Total	Int. Total
Peak Hour Analysis From 04:00 PM to 04:45 PM - Peak 1 of 1																	
Peak Hour for Entire Intersection Begins at 04:00 PM																	
04:00 PM	54	**2**	33	89	30	25	0	55	0	0	0	0	0	70	4	74	218
04:15 PM	58	0	**45**	103	19	28	0	47	0	0	0	0	0	81	4	85	235
04:30 PM	**68**	0	27	95	47	23	0	70	0	0	0	0	0	**103**	**17**	**120**	**285**
04:45 PM	61	1	45	**107**	**61**	**29**	0	**90**	0	0	0	0	0	78	8	86	283
Total Volume	241	3	150	394	157	105	0	262	0	0	0	0	0	332	33	365	1021
% App. Total	61.2	0.8	38.1		59.9	40.1	0		0	0	0		0	91	9		
PHF	.886	.375	.833	.921	.643	.905	.000	.728	.000	.000	.000	.000	.000	.806	.485	.760	.896

Counts Unlimited
PO Box 1178
Corona, CA 92878
(951) 268-6268

City of Perris
N/S: I-215 Southbound Ramps
E/W: Harley Knox Boulevard
Weather: Clear

File Name : PER215SHAPM
Site Code : 05115699
Start Date : 12/16/2015
Page No : 2

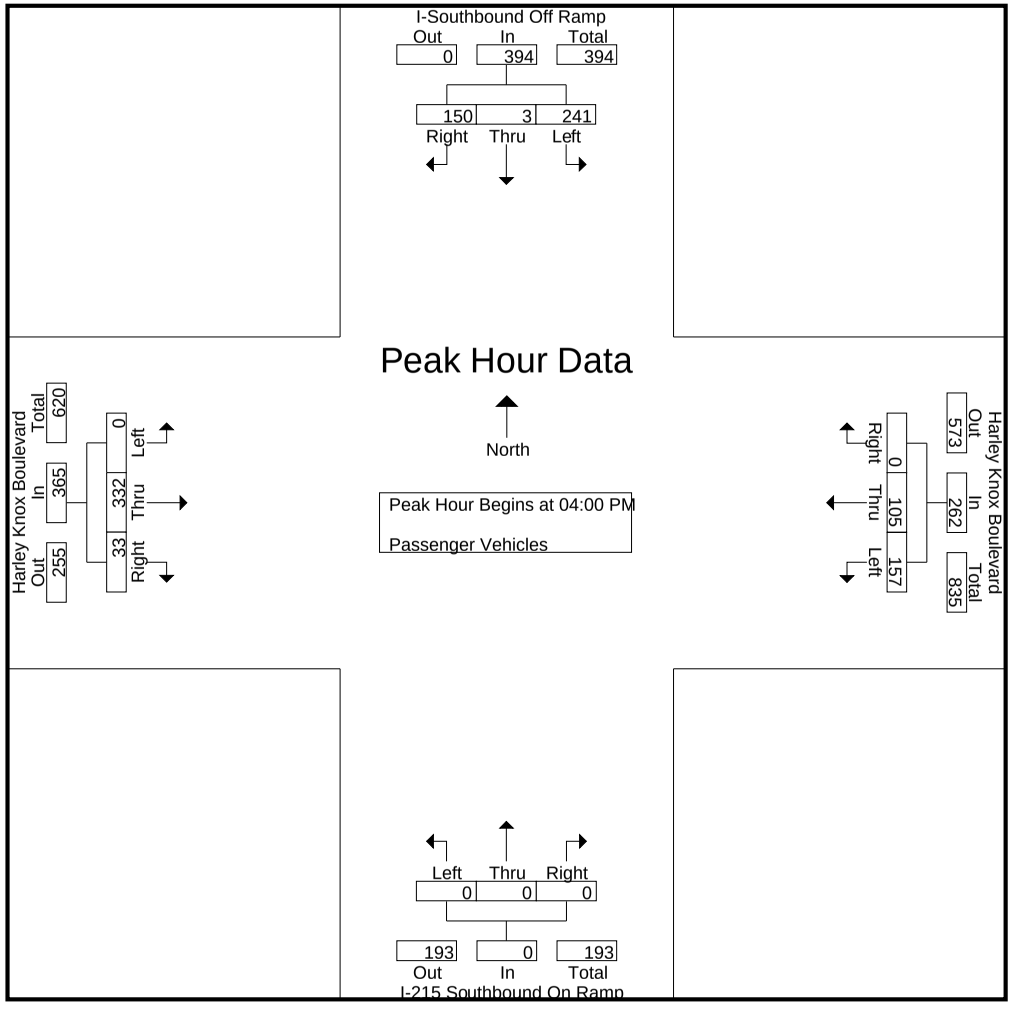

Counts Unlimited
PO Box 1178
Corona, CA 92878
(951) 268-6268

City of Perris
N/S: I-215 Southbound Ramps
E/W: Harley Knox Boulevard
Weather: Clear

File Name : PER215SHAPM
Site Code : 05115699
Start Date : 12/16/2015
Page No : 3

	I-Southbound Off Ramp Southbound				Harley Knox Boulevard Westbound				I-215 Southbound On Ramp Northbound				Harley Knox Boulevard Eastbound				
Start Time	Left	Thru	Right	App. Total	Left	Thru	Right	App. Total	Left	Thru	Right	App. Total	Left	Thru	Right	App. Total	Int. Total
Peak Hour Analysis From 04:00 PM to 04:45 PM - Peak 1 of 1																	
Peak Hour for Each Approach Begins at:																	
	04:00 PM				04:00 PM				04:00 PM				04:00 PM				
+0 mins.	54	**2**	33	89	30	25	0	55	0	0	0	0	0	70	4	74	
+15 mins.	58	0	**45**	103	19	28	0	47	0	0	0	0	0	81	4	85	
+30 mins.	**68**	0	27	95	47	23	0	70	0	0	0	0	0	**103**	**17**	**120**	
+45 mins.	61	1	45	**107**	**61**	**29**	0	**90**	0	0	0	0	0	78	8	86	
Total Volume	241	3	150	394	157	105	0	262	0	0	0	0	0	332	33	365	
% App. Total	61.2	0.8	38.1		59.9	40.1	0		0	0	0		0	91	9		
PHF	.886	.375	.833	.921	.643	.905	.000	.728	.000	.000	.000	.000	.000	.806	.485	.760	

Counts Unlimited
PO Box 1178
Corona, CA 92878
(951) 268-6268

City of Perris
N/S: I-215 Southbound Ramps
E/W: Harley Knox Boulevard
Weather: Clear

File Name : PER215SHAPM
Site Code : 05115699
Start Date : 12/16/2015
Page No : 1

Groups Printed- Large 2 Axle Vehicles

	I-Southbound Off Ramp Southbound					Harley Knox Boulevard Westbound					I-215 Southbound On Ramp Northbound					Harley Knox Boulevard Eastbound							
Start Time	Left	Thru	Right	RTOR	App. Total	Left	Thru	Right	RTOR	App. Total	Left	Thru	Right	RTOR	App. Total	Left	Thru	Right	RTOR	App. Total	Exclu. Total	Inclu. Total	Int. Total
04:00 PM	5	0	2	0	7	1	0	0	0	1	0	0	0	0	0	0	3	0	0	3	0	11	11
04:15 PM	3	0	0	0	3	0	0	0	0	0	0	0	0	0	0	0	3	0	0	3	0	6	6
04:30 PM	2	0	3	0	5	4	1	0	0	5	0	0	0	0	0	0	1	0	0	1	0	11	11
04:45 PM	5	0	0	0	5	1	0	0	0	1	0	0	0	0	0	0	0	0	0	0	0	6	6
Total	15	0	5	0	20	6	1	0	0	7	0	0	0	0	0	0	7	0	0	7	0	34	34
05:00 PM	2	0	0	0	2	0	0	0	0	0	0	0	0	0	0	0	1	0	0	1	0	3	3
05:15 PM	2	0	3	2	5	0	0	0	0	0	0	0	0	0	0	0	1	0	0	1	2	6	8
05:30 PM	3	0	1	0	4	0	0	0	0	0	0	0	0	0	0	0	2	1	1	3	1	7	8
05:45 PM	4	0	1	1	5	0	1	0	0	1	0	0	0	0	0	0	1	0	0	1	1	7	8
Total	11	0	5	3	16	0	1	0	0	1	0	0	0	0	0	0	5	1	1	6	4	23	27
Grand Total	26	0	10	3	36	6	2	0	0	8	0	0	0	0	0	0	12	1	1	13	4	57	61
Apprch %	72.2	0	27.8			75	25	0			0	0	0			0	92.3	7.7					
Total %	45.6	0	17.5		63.2	10.5	3.5	0		14	0	0	0		0	0	21.1	1.8		22.8	6.6	93.4	

	I-Southbound Off Ramp Southbound				Harley Knox Boulevard Westbound				I-215 Southbound On Ramp Northbound				Harley Knox Boulevard Eastbound				
Start Time	Left	Thru	Right	App. Total	Left	Thru	Right	App. Total	Left	Thru	Right	App. Total	Left	Thru	Right	App. Total	Int. Total
Peak Hour Analysis From 04:00 PM to 04:45 PM - Peak 1 of 1																	
Peak Hour for Entire Intersection Begins at 04:00 PM																	
04:00 PM	**5**	0	2	**7**	1	0	0	1	0	0	0	0	0	**3**	0	**3**	**11**
04:15 PM	3	0	0	3	0	0	0	0	0	0	0	0	0	3	0	3	6
04:30 PM	2	0	**3**	5	**4**	**1**	0	**5**	0	0	0	0	0	1	0	1	11
04:45 PM	5	0	0	5	1	0	0	1	0	0	0	0	0	0	0	0	6
Total Volume	15	0	5	20	6	1	0	7	0	0	0	0	0	7	0	7	34
% App. Total	75	0	25		85.7	14.3	0		0	0	0		0	100	0		
PHF	.750	.000	.417	.714	.375	.250	.000	.350	.000	.000	.000	.000	.000	.583	.000	.583	.773

Counts Unlimited
PO Box 1178
Corona, CA 92878
(951) 268-6268

City of Perris
N/S: I-215 Southbound Ramps
E/W: Harley Knox Boulevard
Weather: Clear

File Name : PER215SHAPM
Site Code : 05115699
Start Date : 12/16/2015
Page No : 2

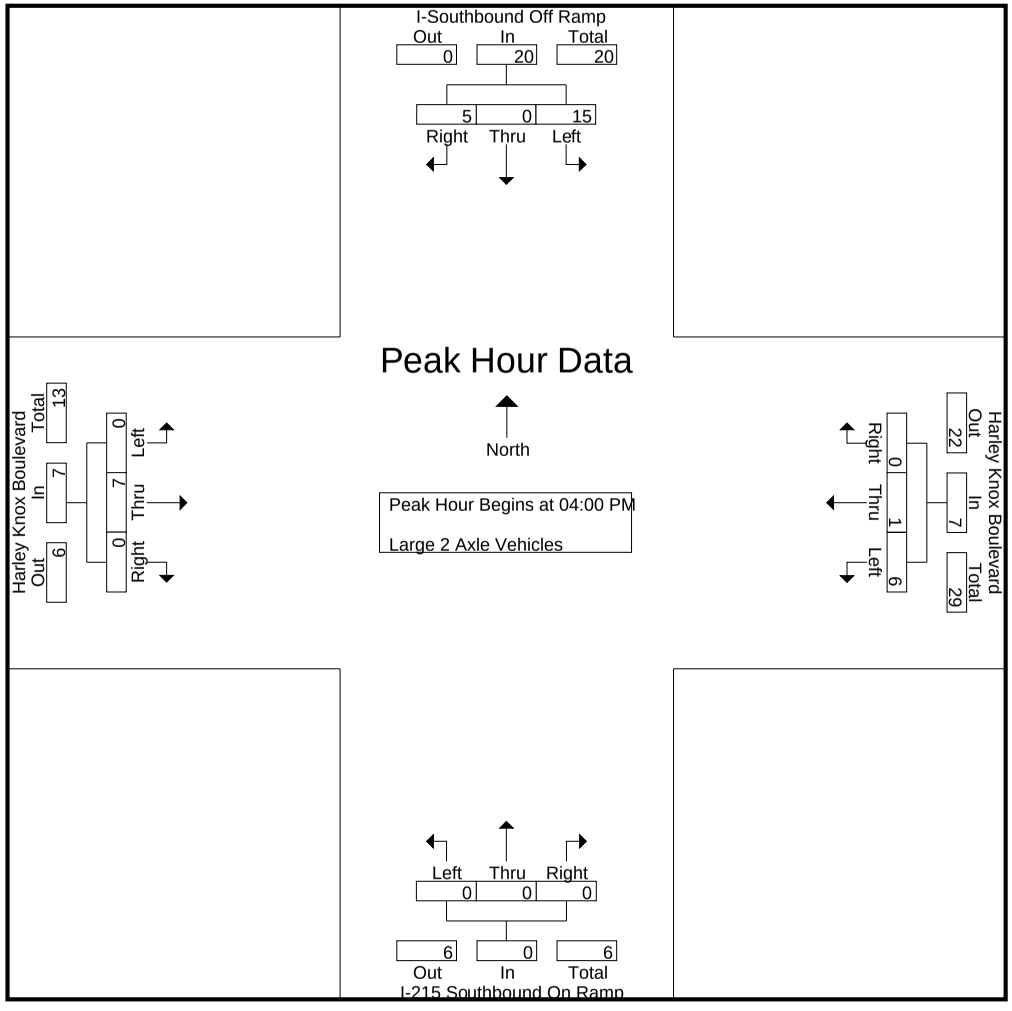

Counts Unlimited
PO Box 1178
Corona, CA 92878
(951) 268-6268

City of Perris
N/S: I-215 Southbound Ramps
E/W: Harley Knox Boulevard
Weather: Clear

File Name : PER215SHAPM
Site Code : 05115699
Start Date : 12/16/2015
Page No : 3

	I-Southbound Off Ramp Southbound				Harley Knox Boulevard Westbound				I-215 Southbound On Ramp Northbound				Harley Knox Boulevard Eastbound				
Start Time	Left	Thru	Right	App. Total	Left	Thru	Right	App. Total	Left	Thru	Right	App. Total	Left	Thru	Right	App. Total	Int. Total
Peak Hour Analysis From 04:00 PM to 04:45 PM - Peak 1 of 1																	
Peak Hour for Each Approach Begins at:																	
	04:00 PM				04:00 PM				04:00 PM				04:00 PM				
+0 mins.	**5**	0	2	**7**	1	0	0	1	0	0	0	0	0	**3**	0	**3**	
+15 mins.	3	0	0	3	0	0	0	0	0	0	0	0	0	3	0	3	
+30 mins.	2	0	**3**	5	**4**	**1**	0	**5**	0	0	0	0	0	1	0	1	
+45 mins.	5	0	0	5	1	0	0	1	0	0	0	0	0	0	0	0	
Total Volume	15	0	5	20	6	1	0	7	0	0	0	0	0	7	0	7	
% App. Total	75	0	25		85.7	14.3	0		0	0	0		0	100	0		
PHF	.750	.000	.417	.714	.375	.250	.000	.350	.000	.000	.000	.000	.000	.583	.000	.583	

Counts Unlimited
PO Box 1178
Corona, CA 92878
(951) 268-6268

City of Perris
N/S: I-215 Southbound Ramps
E/W: Harley Knox Boulevard
Weather: Clear

File Name : PER215SHAPM
Site Code : 05115699
Start Date : 12/16/2015
Page No : 1

Groups Printed- 3 Axle Vehicles

	I-Southbound Off Ramp Southbound					Harley Knox Boulevard Westbound					I-215 Southbound On Ramp Northbound					Harley Knox Boulevard Eastbound							
Start Time	Left	Thru	Right	RTOR	App. Total	Left	Thru	Right	RTOR	App. Total	Left	Thru	Right	RTOR	App. Total	Left	Thru	Right	RTOR	App. Total	Exclu. Total	Inclu. Total	Int. Total
04:00 PM	3	0	0	0	3	0	0	0	0	0	0	0	0	0	0	0	0	0	0	0	0	3	3
04:15 PM	0	0	1	1	1	0	1	0	0	1	0	0	0	0	0	0	1	0	0	1	1	3	4
04:30 PM	4	0	2	0	6	0	0	0	0	0	0	0	0	0	0	0	0	0	0	0	0	6	6
04:45 PM	2	0	0	0	2	0	0	0	0	0	0	0	0	0	0	0	0	0	0	0	0	2	2
Total	9	0	3	1	12	0	1	0	0	1	0	0	0	0	0	0	1	0	0	1	1	14	15
05:00 PM	5	0	0	0	5	0	0	0	0	0	0	0	0	0	0	0	2	0	0	2	0	7	7
05:15 PM	2	0	0	0	2	0	0	0	0	0	0	0	0	0	0	0	0	0	0	0	0	2	2
05:30 PM	3	0	0	0	3	0	0	0	0	0	0	0	0	0	0	0	1	0	0	1	0	4	4
05:45 PM	0	0	0	0	0	0	0	0	0	0	0	0	0	0	0	0	1	0	0	1	0	1	1
Total	10	0	0	0	10	0	0	0	0	0	0	0	0	0	0	0	4	0	0	4	0	14	14
Grand Total	19	0	3	1	22	0	1	0	0	1	0	0	0	0	0	0	5	0	0	5	1	28	29
Apprch %	86.4	0	13.6			0	100	0			0	0	0			0	100	0					
Total %	67.9	0	10.7		78.6	0	3.6	0		3.6	0	0	0		0	0	17.9	0		17.9	3.4	96.6	

	I-Southbound Off Ramp Southbound				Harley Knox Boulevard Westbound				I-215 Southbound On Ramp Northbound				Harley Knox Boulevard Eastbound				
Start Time	Left	Thru	Right	App. Total	Left	Thru	Right	App. Total	Left	Thru	Right	App. Total	Left	Thru	Right	App. Total	Int. Total
Peak Hour Analysis From 04:00 PM to 04:45 PM - Peak 1 of 1																	
Peak Hour for Entire Intersection Begins at 04:00 PM																	
04:00 PM	3	0	0	3	0	0	0	0	0	0	0	0	0	0	0	0	3
04:15 PM	0	0	1	1	0	**1**	0	**1**	0	0	0	0	0	**1**	0	**1**	3
04:30 PM	**4**	0	**2**	**6**	0	0	0	0	0	0	0	0	0	0	0	0	**6**
04:45 PM	2	0	0	2	0	0	0	0	0	0	0	0	0	0	0	0	2
Total Volume	9	0	3	12	0	1	0	1	0	0	0	0	0	1	0	1	14
% App. Total	75	0	25		0	100	0		0	0	0		0	100	0		
PHF	.563	.000	.375	.500	.000	.250	.000	.250	.000	.000	.000	.000	.000	.250	.000	.250	.583

Counts Unlimited
PO Box 1178
Corona, CA 92878
(951) 268-6268

City of Perris
N/S: I-215 Southbound Ramps
E/W: Harley Knox Boulevard
Weather: Clear

File Name : PER215SHAPM
Site Code : 05115699
Start Date : 12/16/2015
Page No : 2

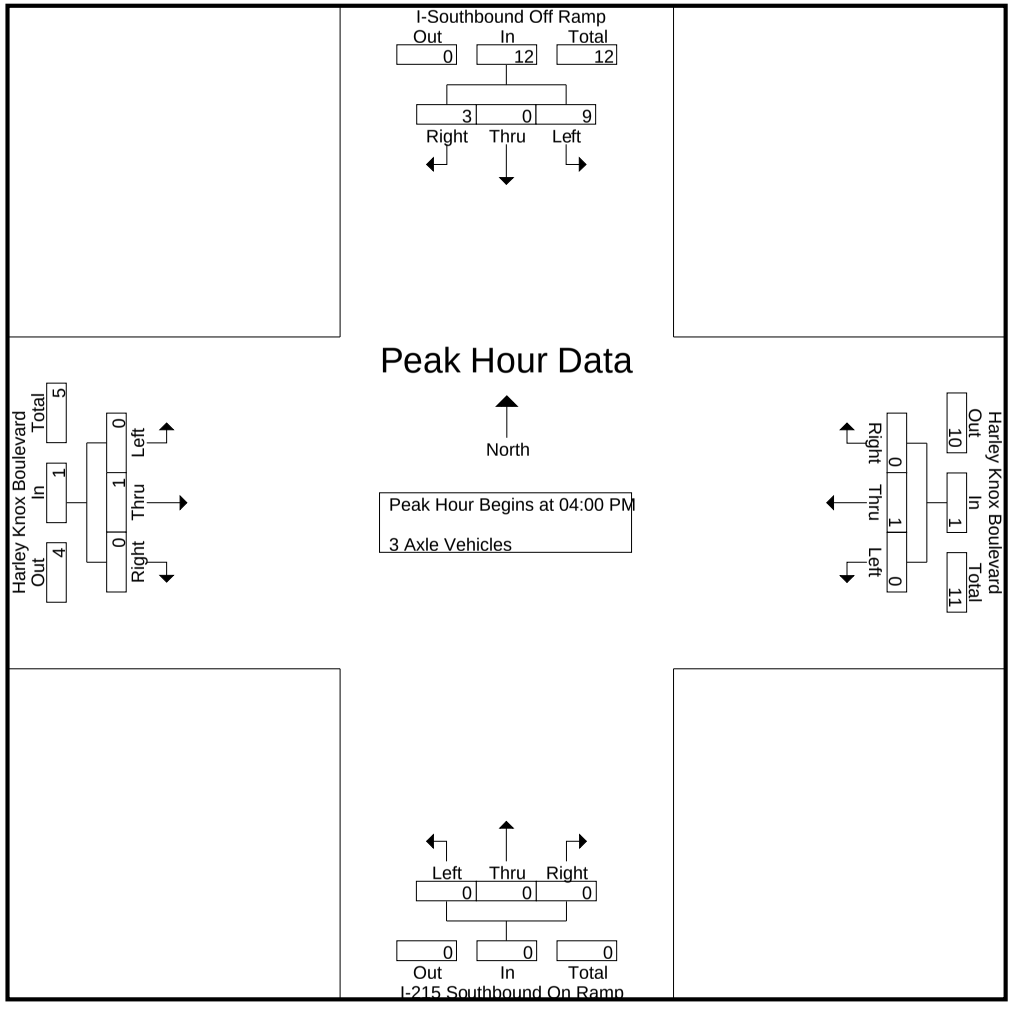

Counts Unlimited
PO Box 1178
Corona, CA 92878
(951) 268-6268

City of Perris
N/S: I-215 Southbound Ramps
E/W: Harley Knox Boulevard
Weather: Clear

File Name : PER215SHAPM
Site Code : 05115699
Start Date : 12/16/2015
Page No : 3

	I-Southbound Off Ramp Southbound				Harley Knox Boulevard Westbound				I-215 Southbound On Ramp Northbound				Harley Knox Boulevard Eastbound				
Start Time	Left	Thru	Right	App. Total	Left	Thru	Right	App. Total	Left	Thru	Right	App. Total	Left	Thru	Right	App. Total	Int. Total
Peak Hour Analysis From 04:00 PM to 04:45 PM - Peak 1 of 1																	
Peak Hour for Each Approach Begins at:																	
	04:00 PM				04:00 PM				04:00 PM				04:00 PM				
+0 mins.	3	0	0	3	0	0	0	0	0	0	0	0	0	0	0	0	
+15 mins.	0	0	1	1	0	**1**	0	**1**	0	0	0	0	0	**1**	0	**1**	
+30 mins.	**4**	0	**2**	**6**	0	0	0	0	0	0	0	0	0	0	0	0	
+45 mins.	2	0	0	2	0	0	0	0	0	0	0	0	0	0	0	0	
Total Volume	9	0	3	12	0	1	0	1	0	0	0	0	0	1	0	1	
% App. Total	75	0	25		0	100	0		0	0	0		0	100	0		
PHF	.563	.000	.375	.500	.000	.250	.000	.250	.000	.000	.000	.000	.000	.250	.000	.250	

Counts Unlimited
PO Box 1178
Corona, CA 92878
(951) 268-6268

City of Perris
N/S: I-215 Southbound Ramps
E/W: Harley Knox Boulevard
Weather: Clear

File Name : PER215SHAPM
Site Code : 05115699
Start Date : 12/16/2015
Page No : 1

Groups Printed- 4+ Axle Trucks

	I-Southbound Off Ramp Southbound					Harley Knox Boulevard Westbound					I-215 Southbound On Ramp Northbound					Harley Knox Boulevard Eastbound							
Start Time	Left	Thru	Right	RTOR	App. Total	Left	Thru	Right	RTOR	App. Total	Left	Thru	Right	RTOR	App. Total	Left	Thru	Right	RTOR	App. Total	Exclu. Total	Inclu. Total	Int. Total
04:00 PM	2	0	3	1	5	2	1	0	0	3	0	0	0	0	0	0	7	0	0	7	1	15	16
04:15 PM	7	0	1	0	8	2	1	0	0	3	0	0	0	0	0	0	3	0	0	3	0	14	14
04:30 PM	12	0	1	1	13	1	3	0	0	4	0	0	0	0	0	0	1	0	0	1	1	18	19
04:45 PM	8	0	1	0	9	1	1	0	0	2	0	0	0	0	0	0	1	0	0	1	0	12	12
Total	29	0	6	2	35	6	6	0	0	12	0	0	0	0	0	0	12	0	0	12	2	59	61
05:00 PM	3	0	2	0	5	0	4	0	0	4	0	0	0	0	0	0	0	0	0	0	0	9	9
05:15 PM	4	0	1	0	5	1	0	0	0	1	0	0	0	0	0	0	2	0	0	2	0	8	8
05:30 PM	3	0	0	0	3	2	0	0	0	2	0	0	0	0	0	0	3	0	0	3	0	8	8
05:45 PM	1	0	2	0	3	1	1	0	0	2	0	0	0	0	0	0	2	0	0	2	0	7	7
Total	11	0	5	0	16	4	5	0	0	9	0	0	0	0	0	0	7	0	0	7	0	32	32
Grand Total	40	0	11	2	51	10	11	0	0	21	0	0	0	0	0	0	19	0	0	19	2	91	93
Apprch %	78.4	0	21.6			47.6	52.4	0			0	0	0			0	100	0					
Total %	44	0	12.1		56	11	12.1	0		23.1	0	0	0		0	0	20.9	0		20.9	2.2	97.8	

	I-Southbound Off Ramp Southbound				Harley Knox Boulevard Westbound				I-215 Southbound On Ramp Northbound				Harley Knox Boulevard Eastbound				
Start Time	Left	Thru	Right	App. Total	Left	Thru	Right	App. Total	Left	Thru	Right	App. Total	Left	Thru	Right	App. Total	Int. Total
Peak Hour Analysis From 04:00 PM to 04:45 PM - Peak 1 of 1																	
Peak Hour for Entire Intersection Begins at 04:00 PM																	
04:00 PM	2	0	**3**	5	**2**	1	0	3	0	0	0	0	0	**7**	0	**7**	15
04:15 PM	7	0	1	8	2	1	0	3	0	0	0	0	0	3	0	3	14
04:30 PM	**12**	0	1	**13**	1	**3**	0	**4**	0	0	0	0	0	1	0	1	**18**
04:45 PM	8	0	1	9	1	1	0	2	0	0	0	0	0	1	0	1	12
Total Volume	29	0	6	35	6	6	0	12	0	0	0	0	0	12	0	12	59
% App. Total	82.9	0	17.1		50	50	0		0	0	0		0	100	0		
PHF	.604	.000	.500	.673	.750	.500	.000	.750	.000	.000	.000	.000	.000	.429	.000	.429	.819

Counts Unlimited
PO Box 1178
Corona, CA 92878
(951) 268-6268

City of Perris
N/S: I-215 Southbound Ramps
E/W: Harley Knox Boulevard
Weather: Clear

File Name : PER215SHAPM
Site Code : 05115699
Start Date : 12/16/2015
Page No : 2

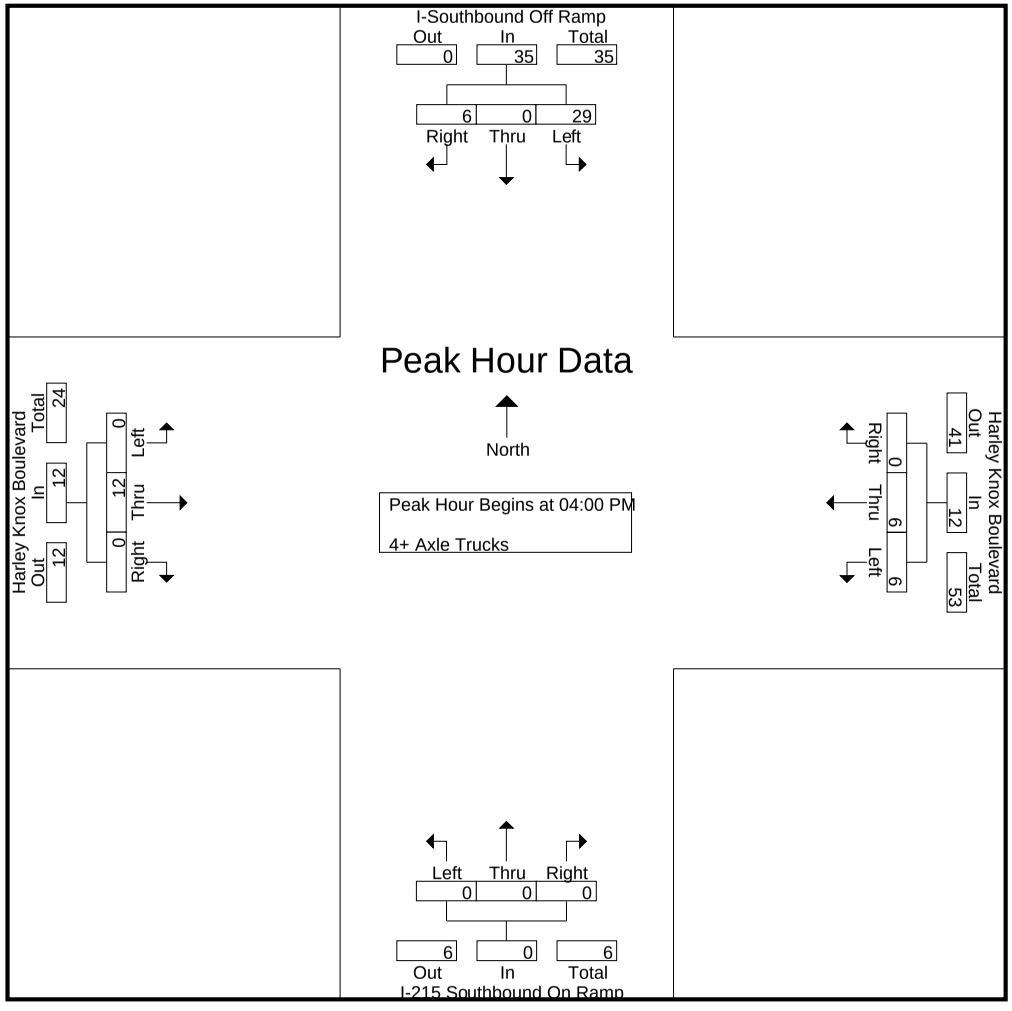

Counts Unlimited
PO Box 1178
Corona, CA 92878
(951) 268-6268

City of Perris
N/S: I-215 Southbound Ramps
E/W: Harley Knox Boulevard
Weather: Clear

File Name : PER215SHAPM
Site Code : 05115699
Start Date : 12/16/2015
Page No : 3

	I-Southbound Off Ramp Southbound				Harley Knox Boulevard Westbound				I-215 Southbound On Ramp Northbound				Harley Knox Boulevard Eastbound				
Start Time	Left	Thru	Right	App. Total	Left	Thru	Right	App. Total	Left	Thru	Right	App. Total	Left	Thru	Right	App. Total	Int. Total
Peak Hour Analysis From 04:00 PM to 04:45 PM - Peak 1 of 1																	
Peak Hour for Each Approach Begins at:																	
	04:00 PM				04:00 PM				04:00 PM				04:00 PM				
+0 mins.	2	0	**3**	5	**2**	1	0	3	0	0	0	0	0	**7**	0	**7**	
+15 mins.	7	0	1	8	2	1	0	3	0	0	0	0	0	3	0	3	
+30 mins.	**12**	0	1	**13**	1	**3**	0	**4**	0	0	0	0	0	1	0	1	
+45 mins.	8	0	1	9	1	1	0	2	0	0	0	0	0	1	0	1	
Total Volume	29	0	6	35	6	6	0	12	0	0	0	0	0	12	0	12	
% App. Total	82.9	0	17.1		50	50	0		0	0	0		0	100	0		
PHF	.604	.000	.500	.673	.750	.500	.000	.750	.000	.000	.000	.000	.000	.429	.000	.429	

Location: Perris
N/S: I-215 Southbound Ramps
E/W: Harley Knox Boulevard

Site Code: 051-15699
Date: 12/16/2015
Weather: Clear

PEDESTRIANS

	North Leg I-215 Southbound Ramps	East Leg Harley Knox Boulevard	South Leg I-215 Southbound Ramps	West Leg Harley Knox Boulevard	TOTAL
7:00 AM	0	0	0	0	0
7:15 AM	0	0	0	0	0
7:30 AM	0	0	0	0	0
7:45 AM	0	0	0	0	0
8:00 AM	0	0	0	0	0
8:15 AM	0	0	0	0	0
8:30 AM	0	0	0	0	0
8:45 AM	0	0	0	0	0
TOTAL VOLUMES:	0	0	0	0	0

	North Leg I-215 Southbound Ramps	East Leg Harley Knox Boulevard	South Leg I-215 Southbound Ramps	West Leg Harley Knox Boulevard	TOTAL
4:00 PM	0	0	0	0	0
4:15 PM	0	0	0	0	0
4:30 PM	0	0	0	0	0
4:45 PM	0	0	0	0	0
5:00 PM	0	0	0	0	0
5:15 PM	0	0	0	0	0
5:30 PM	0	0	0	0	0
5:45 PM	0	0	0	0	0
TOTAL VOLUMES:	0	0	0	0	0

Counts Unlimited, Inc.
PO Box 1178
Corona, CA 92878
951-268-6268

Location: Perris
N/S: I-215 Southbound Ramps
E/W: Harley Knox Boulevard

Site Code: 051-15699
Date: 12/16/2015
Weather: Clear

BICYCLES

	North Leg I-215 Southbound Ramps	East Leg Harley Knox Boulevard	South Leg I-215 Southbound Ramps	West Leg Harley Knox Boulevard	TOTAL
7:00 AM	0	0	0	0	0
7:15 AM	0	0	0	0	0
7:30 AM	0	0	0	0	0
7:45 AM	0	0	0	0	0
8:00 AM	0	0	0	0	0
8:15 AM	0	0	0	0	0
8:30 AM	0	0	0	0	0
8:45 AM	0	0	0	0	0
TOTAL VOLUMES:	0	0	0	0	0

	North Leg I-215 Southbound Ramps	East Leg Harley Knox Boulevard	South Leg I-215 Southbound Ramps	West Leg Harley Knox Boulevard	TOTAL
4:00 PM	0	0	0	0	0
4:15 PM	0	0	0	0	0
4:30 PM	0	0	0	0	0
4:45 PM	0	0	0	0	0
5:00 PM	0	0	0	0	0
5:15 PM	0	0	0	0	0
5:30 PM	0	0	0	0	0
5:45 PM	0	0	0	0	0
TOTAL VOLUMES:	0	0	0	0	0

Counts Unlimited, Inc.
PO Box 1178
Corona, CA 92878
951-268-6268

Counts Unlimited
PO Box 1178
Corona, CA 92878
(951) 268-6268

City of Perris
N/S: I-215 Northbound Ramps
E/W: Harley Knox Boulevard
Weather: Clear

File Name : PER215NHAAM
Site Code : 05115699
Start Date : 12/16/2015
Page No : 1

Groups Printed- Passenger Vehicles - Large 2 Axle Vehicles - 3 Axle Vehicles - 4+ Axle Trucks

	I-215 Northbound On Ramp Southbound					Harley Knox Boulevard Westbound					I-215 Northbound Off Ramp Northbound					Harley Knox Boulevard Eastbound							
Start Time	Left	Thru	Right	RTOR	App. Total	Left	Thru	Right	RTOR	App. Total	Left	Thru	Right	RTOR	App. Total	Left	Thru	Right	RTOR	App. Total	Exclu. Total	Inclu. Total	Int. Total
07:00 AM	0	0	0	0	0	0	142	124	4	266	2	1	19	13	22	60	122	0	0	182	17	470	487
07:15 AM	0	0	0	0	0	0	64	111	5	175	2	0	16	7	18	91	101	0	0	192	12	385	397
07:30 AM	0	0	0	0	0	0	64	111	9	175	5	1	13	8	19	76	147	0	0	223	17	417	434
07:45 AM	0	0	0	0	0	0	54	84	5	138	3	1	31	19	35	60	139	0	0	199	24	372	396
Total	0	0	0	0	0	0	324	430	23	754	12	3	79	47	94	287	509	0	0	796	70	1644	1714
08:00 AM	0	0	0	0	0	0	44	71	4	115	4	0	27	19	31	28	91	0	0	119	23	265	288
08:15 AM	0	0	0	0	0	0	36	73	4	109	1	0	25	23	26	25	54	0	0	79	27	214	241
08:30 AM	0	0	0	0	0	0	32	44	3	76	3	0	22	19	25	21	62	0	0	83	22	184	206
08:45 AM	0	0	0	0	0	0	30	42	4	72	4	0	16	13	20	22	59	0	0	81	17	173	190
Total	0	0	0	0	0	0	142	230	15	372	12	0	90	74	102	96	266	0	0	362	89	836	925
Grand Total	0	0	0	0	0	0	466	660	38	1126	24	3	169	121	196	383	775	0	0	1158	159	2480	2639
Apprch %	0	0	0			0	41.4	58.6			12.2	1.5	86.2			33.1	66.9	0					
Total %	0	0	0		0	0	18.8	26.6		45.4	1	0.1	6.8		7.9	15.4	31.2	0		46.7	6	94	
Passenger Vehicles	0	0	0		0	0	404	562		1001	23	2	133		255	353	668	0		1021	0	0	2277
% Passenger Vehicles	0	0	0	0	0	0	86.7	85.2	92.1	86	95.8	66.7	78.7	80.2	80.4	92.2	86.2	0	0	88.2	0	0	86.3
Large 2 Axle Vehicles	0	0	0		0	0	26	17		44	0	1	4		8	8	40	0		48	0	0	100
% Large 2 Axle Vehicles	0	0	0	0	0	0	5.6	2.6	2.6	3.8	0	33.3	2.4	2.5	2.5	2.1	5.2	0	0	4.1	0	0	3.8
3 Axle Vehicles	0	0	0		0	0	9	17		26	0	0	11		18	2	13	0		15	0	0	59
% 3 Axle Vehicles	0	0	0	0	0	0	1.9	2.6	0	2.2	0	0	6.5	5.8	5.7	0.5	1.7	0	0	1.3	0	0	2.2
4+ Axle Trucks	0	0	0		0	0	27	64		93	1	0	21		36	20	54	0		74	0	0	203
% 4+ Axle Trucks	0	0	0	0	0	0	5.8	9.7	5.3	8	4.2	0	12.4	11.6	11.4	5.2	7	0	0	6.4	0	0	7.7

	I-215 Northbound On Ramp Southbound				Harley Knox Boulevard Westbound				I-215 Northbound Off Ramp Northbound				Harley Knox Boulevard Eastbound				
Start Time	Left	Thru	Right	App. Total	Left	Thru	Right	App. Total	Left	Thru	Right	App. Total	Left	Thru	Right	App. Total	Int. Total
Peak Hour Analysis From 07:00 AM to 08:45 AM - Peak 1 of 1																	
Peak Hour for Entire Intersection Begins at 07:00 AM																	
07:00 AM	0	0	0	0	0	**142**	**124**	**266**	2	**1**	19	22	60	122	0	182	**470**
07:15 AM	0	0	0	0	0	64	111	175	2	0	16	18	**91**	101	0	192	385
07:30 AM	0	0	0	0	0	64	111	175	**5**	1	13	19	76	**147**	0	**223**	417
07:45 AM	0	0	0	0	0	54	84	138	3	1	**31**	**35**	60	139	0	199	372
Total Volume	0	0	0	0	0	324	430	754	12	3	79	94	287	509	0	796	1644
% App. Total	0	0	0		0	43	57		12.8	3.2	84		36.1	63.9	0		
PHF	.000	.000	.000	.000	.000	.570	.867	.709	.600	.750	.637	.671	.788	.866	.000	.892	.874

Counts Unlimited
PO Box 1178
Corona, CA 92878
(951) 268-6268

City of Perris
N/S: I-215 Northbound Ramps
E/W: Harley Knox Boulevard
Weather: Clear

File Name : PER215NHAAM
Site Code : 05115699
Start Date : 12/16/2015
Page No : 2

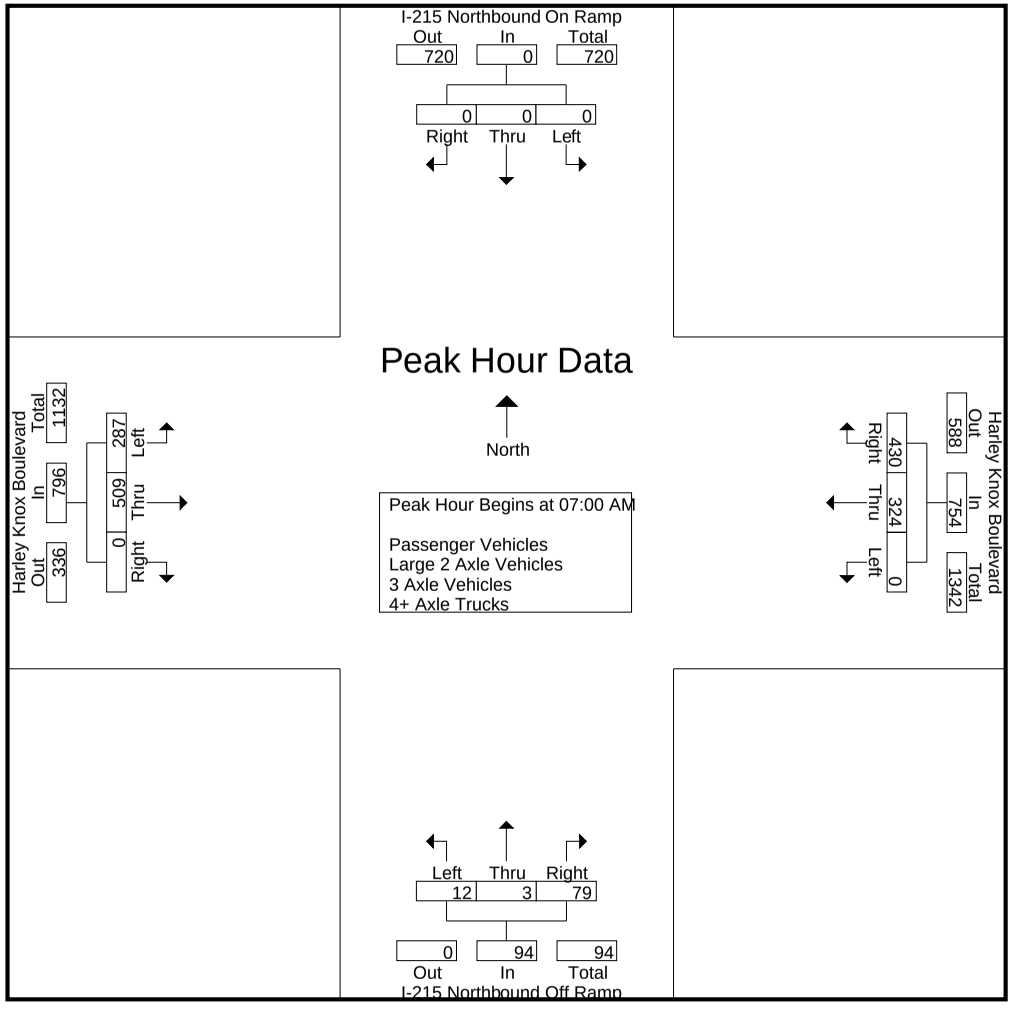

Counts Unlimited
PO Box 1178
Corona, CA 92878
(951) 268-6268

City of Perris
N/S: I-215 Northbound Ramps
E/W: Harley Knox Boulevard
Weather: Clear

File Name : PER215NHAAM
Site Code : 05115699
Start Date : 12/16/2015
Page No : 3

	I-215 Northbound On Ramp Southbound				Harley Knox Boulevard Westbound				I-215 Northbound Off Ramp Northbound				Harley Knox Boulevard Eastbound				
Start Time	Left	Thru	Right	App. Total	Left	Thru	Right	App. Total	Left	Thru	Right	App. Total	Left	Thru	Right	App. Total	Int. Total
Peak Hour Analysis From 07:00 AM to 08:45 AM - Peak 1 of 1																	
Peak Hour for Each Approach Begins at:																	
	07:00 AM				07:00 AM				07:45 AM				07:00 AM				
+0 mins.	0	0	0	0	0	**142**	**124**	**266**	3	**1**	**31**	**35**	60	122	0	182	
+15 mins.	0	0	0	0	0	64	111	175	**4**	0	27	31	**91**	101	0	192	
+30 mins.	0	0	0	0	0	64	111	175	1	0	25	26	76	**147**	0	**223**	
+45 mins.	0	0	0	0	0	54	84	138	3	0	22	25	60	139	0	199	
Total Volume	0	0	0	0	0	324	430	754	11	1	105	117	287	509	0	796	
% App. Total	0	0	0		0	43	57		9.4	0.9	89.7		36.1	63.9	0		
PHF	.000	.000	.000	.000	.000	.570	.867	.709	.688	.250	.847	.836	.788	.866	.000	.892	

Counts Unlimited
PO Box 1178
Corona, CA 92878
(951) 268-6268

City of Perris
N/S: I-215 Northbound Ramps
E/W: Harley Knox Boulevard
Weather: Clear

File Name : PER215NHAAM
Site Code : 05115699
Start Date : 12/16/2015
Page No : 1

Groups Printed- Passenger Vehicles

	I-215 Northbound On Ramp Southbound					Harley Knox Boulevard Westbound					I-215 Northbound Off Ramp Northbound					Harley Knox Boulevard Eastbound							
Start Time	Left	Thru	Right	RTOR	App. Total	Left	Thru	Right	RTOR	App. Total	Left	Thru	Right	RTOR	App. Total	Left	Thru	Right	RTOR	App. Total	Exclu. Total	Inclu. Total	Int. Total
07:00 AM	0	0	0	0	0	0	132	115	3	247	2	1	12	9	15	60	109	0	0	169	12	431	443
07:15 AM	0	0	0	0	0	0	60	98	4	158	2	0	14	5	16	84	86	0	0	170	9	344	353
07:30 AM	0	0	0	0	0	0	56	97	9	153	5	1	9	5	15	70	135	0	0	205	14	373	387
07:45 AM	0	0	0	0	0	0	47	75	5	122	3	0	27	16	30	55	127	0	0	182	21	334	355
Total	0	0	0	0	0	0	295	385	21	680	12	2	62	35	76	269	457	0	0	726	56	1482	1538
08:00 AM	0	0	0	0	0	0	34	51	4	85	4	0	24	18	28	23	79	0	0	102	22	215	237
08:15 AM	0	0	0	0	0	0	29	57	4	86	1	0	19	19	20	23	42	0	0	65	23	171	194
08:30 AM	0	0	0	0	0	0	21	37	3	58	3	0	16	14	19	19	45	0	0	64	17	141	158
08:45 AM	0	0	0	0	0	0	25	32	3	57	3	0	12	11	15	19	45	0	0	64	14	136	150
Total	0	0	0	0	0	0	109	177	14	286	11	0	71	62	82	84	211	0	0	295	76	663	739
Grand Total	0	0	0	0	0	0	404	562	35	966	23	2	133	97	158	353	668	0	0	1021	132	2145	2277
Apprch %	0	0	0			0	41.8	58.2			14.6	1.3	84.2			34.6	65.4	0					
Total %	0	0	0		0	0	18.8	26.2		45	1.1	0.1	6.2		7.4	16.5	31.1	0		47.6	5.8	94.2	

	I-215 Northbound On Ramp Southbound				Harley Knox Boulevard Westbound				I-215 Northbound Off Ramp Northbound				Harley Knox Boulevard Eastbound				
Start Time	Left	Thru	Right	App. Total	Left	Thru	Right	App. Total	Left	Thru	Right	App. Total	Left	Thru	Right	App. Total	Int. Total
Peak Hour Analysis From 07:00 AM to 07:45 AM - Peak 1 of 1																	
Peak Hour for Entire Intersection Begins at 07:00 AM																	
07:00 AM	0	0	0	0	0	**132**	**115**	**247**	2	**1**	12	15	60	109	0	169	**431**
07:15 AM	0	0	0	0	0	60	98	158	2	0	14	16	**84**	86	0	170	344
07:30 AM	0	0	0	0	0	56	97	153	**5**	1	9	15	70	**135**	0	**205**	373
07:45 AM	0	0	0	0	0	47	75	122	3	0	**27**	**30**	55	127	0	182	334
Total Volume	0	0	0	0	0	295	385	680	12	2	62	76	269	457	0	726	1482
% App. Total	0	0	0		0	43.4	56.6		15.8	2.6	81.6		37.1	62.9	0		
PHF	.000	.000	.000	.000	.000	.559	.837	.688	.600	.500	.574	.633	.801	.846	.000	.885	.860

Counts Unlimited
PO Box 1178
Corona, CA 92878
(951) 268-6268

City of Perris
N/S: I-215 Northbound Ramps
E/W: Harley Knox Boulevard
Weather: Clear

File Name : PER215NHAAM
Site Code : 05115699
Start Date : 12/16/2015
Page No : 2

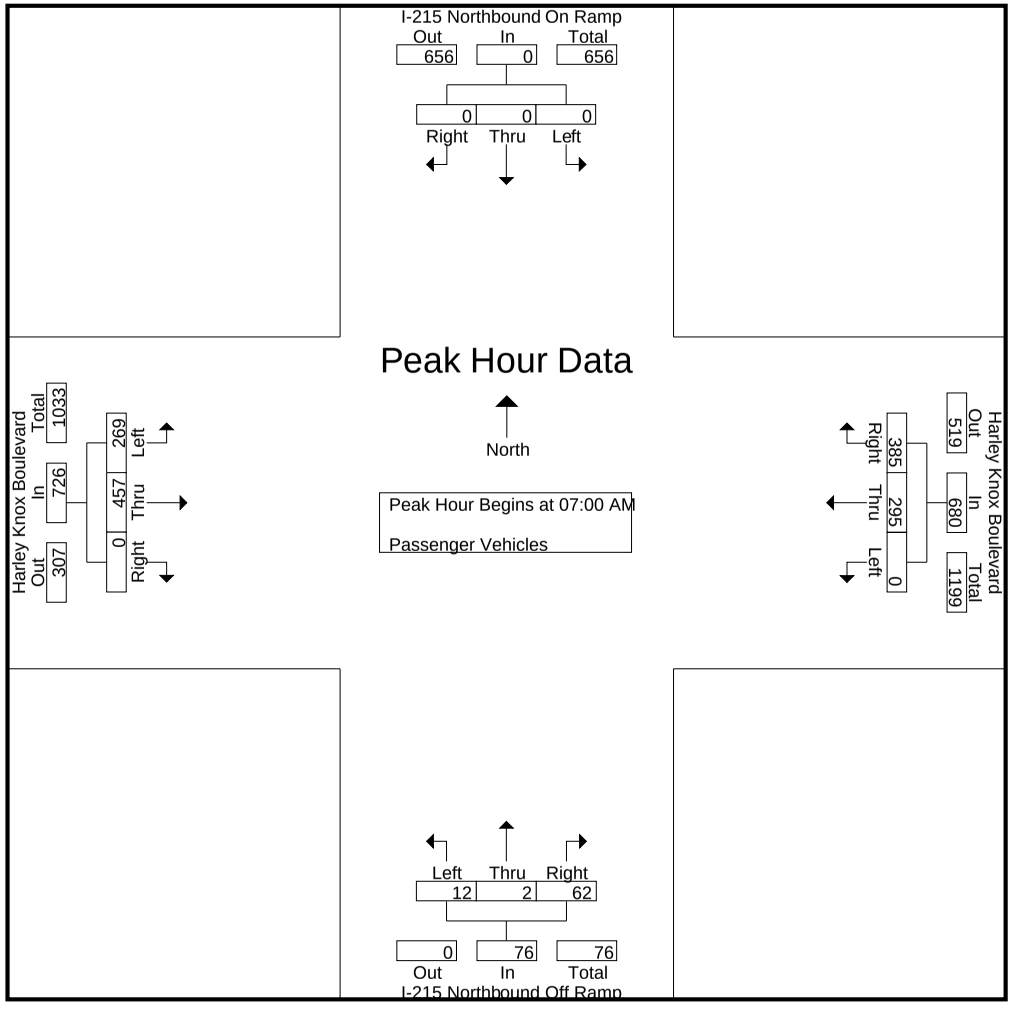

Counts Unlimited
PO Box 1178
Corona, CA 92878
(951) 268-6268

City of Perris
N/S: I-215 Northbound Ramps
E/W: Harley Knox Boulevard
Weather: Clear

File Name : PER215NHAAM
Site Code : 05115699
Start Date : 12/16/2015
Page No : 3

	I-215 Northbound On Ramp Southbound				Harley Knox Boulevard Westbound				I-215 Northbound Off Ramp Northbound				Harley Knox Boulevard Eastbound				
Start Time	Left	Thru	Right	App. Total	Left	Thru	Right	App. Total	Left	Thru	Right	App. Total	Left	Thru	Right	App. Total	Int. Total
Peak Hour Analysis From 07:00 AM to 07:45 AM - Peak 1 of 1																	
Peak Hour for Each Approach Begins at:																	
	07:00 AM				07:00 AM				07:00 AM				07:00 AM				
+0 mins.	0	0	0	0	0	**132**	**115**	**247**	2	**1**	12	15	60	109	0	169	
+15 mins.	0	0	0	0	0	60	98	158	2	0	14	16	**84**	86	0	170	
+30 mins.	0	0	0	0	0	56	97	153	**5**	1	9	15	70	**135**	0	**205**	
+45 mins.	0	0	0	0	0	47	75	122	3	0	**27**	**30**	55	127	0	182	
Total Volume	0	0	0	0	0	295	385	680	12	2	62	76	269	457	0	726	
% App. Total	0	0	0		0	43.4	56.6		15.8	2.6	81.6		37.1	62.9	0		
PHF	.000	.000	.000	.000	.000	.559	.837	.688	.600	.500	.574	.633	.801	.846	.000	.885	

Counts Unlimited
PO Box 1178
Corona, CA 92878
(951) 268-6268

City of Perris
N/S: I-215 Northbound Ramps
E/W: Harley Knox Boulevard
Weather: Clear

File Name : PER215NHAAM
Site Code : 05115699
Start Date : 12/16/2015
Page No : 1

Groups Printed- Large 2 Axle Vehicles

	I-215 Northbound On Ramp Southbound					Harley Knox Boulevard Westbound					I-215 Northbound Off Ramp Northbound					Harley Knox Boulevard Eastbound							
Start Time	Left	Thru	Right	RTOR	App. Total	Left	Thru	Right	RTOR	App. Total	Left	Thru	Right	RTOR	App. Total	Left	Thru	Right	RTOR	App. Total	Exclu. Total	Inclu. Total	Int. Total
07:00 AM	0	0	0	0	0	0	6	0	0	6	0	0	0	0	0	0	4	0	0	4	0	10	10
07:15 AM	0	0	0	0	0	0	1	1	0	2	0	0	1	1	1	2	7	0	0	9	1	12	13
07:30 AM	0	0	0	0	0	0	1	3	0	4	0	0	0	0	0	1	3	0	0	4	0	8	8
07:45 AM	0	0	0	0	0	0	4	1	0	5	0	1	0	0	1	1	5	0	0	6	0	12	12
Total	0	0	0	0	0	0	12	5	0	17	0	1	1	1	2	4	19	0	0	23	1	42	43
08:00 AM	0	0	0	0	0	0	3	5	0	8	0	0	0	0	0	2	4	0	0	6	0	14	14
08:15 AM	0	0	0	0	0	0	4	6	0	10	0	0	1	1	1	0	6	0	0	6	1	17	18
08:30 AM	0	0	0	0	0	0	5	0	0	5	0	0	0	0	0	2	8	0	0	10	0	15	15
08:45 AM	0	0	0	0	0	0	2	1	1	3	0	0	2	1	2	0	3	0	0	3	2	8	10
Total	0	0	0	0	0	0	14	12	1	26	0	0	3	2	3	4	21	0	0	25	3	54	57
Grand Total	0	0	0	0	0	0	26	17	1	43	0	1	4	3	5	8	40	0	0	48	4	96	100
Apprch %	0	0	0			0	60.5	39.5			0	20	80			16.7	83.3	0					
Total %	0	0	0		0	0	27.1	17.7		44.8	0	1	4.2		5.2	8.3	41.7	0		50	4	96	

	I-215 Northbound On Ramp Southbound				Harley Knox Boulevard Westbound				I-215 Northbound Off Ramp Northbound				Harley Knox Boulevard Eastbound				
Start Time	Left	Thru	Right	App. Total	Left	Thru	Right	App. Total	Left	Thru	Right	App. Total	Left	Thru	Right	App. Total	Int. Total
Peak Hour Analysis From 07:00 AM to 07:45 AM - Peak 1 of 1																	
Peak Hour for Entire Intersection Begins at 07:00 AM																	
07:00 AM	0	0	0	0	0	**6**	0	**6**	0	0	0	0	0	4	0	4	10
07:15 AM	0	0	0	0	0	1	1	2	0	0	**1**	**1**	**2**	**7**	0	**9**	**12**
07:30 AM	0	0	0	0	0	1	**3**	4	0	0	0	0	1	3	0	4	8
07:45 AM	0	0	0	0	0	4	1	5	0	**1**	0	1	1	5	0	6	12
Total Volume	0	0	0	0	0	12	5	17	0	1	1	2	4	19	0	23	42
% App. Total	0	0	0		0	70.6	29.4		0	50	50		17.4	82.6	0		
PHF	.000	.000	.000	.000	.000	.500	.417	.708	.000	.250	.250	.500	.500	.679	.000	.639	.875

Counts Unlimited
PO Box 1178
Corona, CA 92878
(951) 268-6268

City of Perris
N/S: I-215 Northbound Ramps
E/W: Harley Knox Boulevard
Weather: Clear

File Name : PER215NHAAM
Site Code : 05115699
Start Date : 12/16/2015
Page No : 2

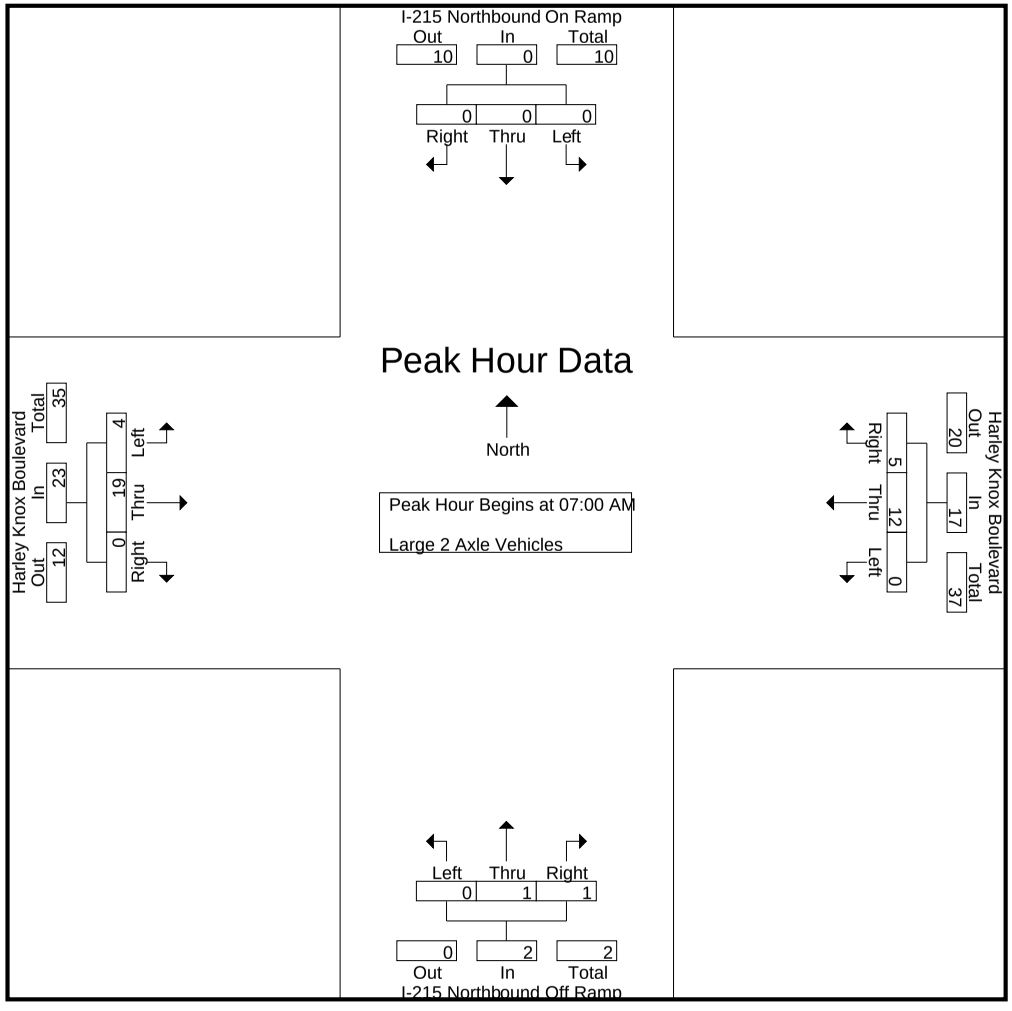

Counts Unlimited
PO Box 1178
Corona, CA 92878
(951) 268-6268

City of Perris
N/S: I-215 Northbound Ramps
E/W: Harley Knox Boulevard
Weather: Clear

File Name : PER215NHAAM
Site Code : 05115699
Start Date : 12/16/2015
Page No : 3

	I-215 Northbound On Ramp Southbound				Harley Knox Boulevard Westbound				I-215 Northbound Off Ramp Northbound				Harley Knox Boulevard Eastbound				
Start Time	Left	Thru	Right	App. Total	Left	Thru	Right	App. Total	Left	Thru	Right	App. Total	Left	Thru	Right	App. Total	Int. Total
Peak Hour Analysis From 07:00 AM to 07:45 AM - Peak 1 of 1																	
Peak Hour for Each Approach Begins at:																	
	07:00 AM				07:00 AM				07:00 AM				07:00 AM				
+0 mins.	0	0	0	0	0	**6**	0	**6**	0	0	0	0	0	4	0	4	
+15 mins.	0	0	0	0	0	1	1	2	0	0	**1**	**1**	**2**	**7**	0	**9**	
+30 mins.	0	0	0	0	0	1	**3**	4	0	0	0	0	1	3	0	4	
+45 mins.	0	0	0	0	0	4	1	5	0	**1**	0	1	1	5	0	6	
Total Volume	0	0	0	0	0	12	5	17	0	1	1	2	4	19	0	23	
% App. Total	0	0	0		0	70.6	29.4		0	50	50		17.4	82.6	0		
PHF	.000	.000	.000	.000	.000	.500	.417	.708	.000	.250	.250	.500	.500	.679	.000	.639	

Counts Unlimited
PO Box 1178
Corona, CA 92878
(951) 268-6268

City of Perris
N/S: I-215 Northbound Ramps
E/W: Harley Knox Boulevard
Weather: Clear

File Name : PER215NHAAM
Site Code : 05115699
Start Date : 12/16/2015
Page No : 1

Groups Printed- 3 Axle Vehicles

	I-215 Northbound On Ramp Southbound					Harley Knox Boulevard Westbound					I-215 Northbound Off Ramp Northbound					Harley Knox Boulevard Eastbound							
Start Time	Left	Thru	Right	RTOR	App. Total	Left	Thru	Right	RTOR	App. Total	Left	Thru	Right	RTOR	App. Total	Left	Thru	Right	RTOR	App. Total	Exclu. Total	Inclu. Total	Int. Total
07:00 AM	0	0	0	0	0	0	1	2	0	3	0	0	4	1	4	0	1	0	0	1	1	8	9
07:15 AM	0	0	0	0	0	0	1	3	0	4	0	0	0	0	0	0	1	0	0	1	0	5	5
07:30 AM	0	0	0	0	0	0	1	3	0	4	0	0	1	1	1	1	4	0	0	5	1	10	11
07:45 AM	0	0	0	0	0	0	0	1	0	1	0	0	2	2	2	1	1	0	0	2	2	5	7
Total	0	0	0	0	0	0	3	9	0	12	0	0	7	4	7	2	7	0	0	9	4	28	32
08:00 AM	0	0	0	0	0	0	1	2	0	3	0	0	1	0	1	0	0	0	0	0	0	4	4
08:15 AM	0	0	0	0	0	0	1	4	0	5	0	0	1	1	1	0	2	0	0	2	1	8	9
08:30 AM	0	0	0	0	0	0	4	2	0	6	0	0	2	2	2	0	4	0	0	4	2	12	14
08:45 AM	0	0	0	0	0	0	0	0	0	0	0	0	0	0	0	0	0	0	0	0	0	0	0
Total	0	0	0	0	0	0	6	8	0	14	0	0	4	3	4	0	6	0	0	6	3	24	27
Grand Total	0	0	0	0	0	0	9	17	0	26	0	0	11	7	11	2	13	0	0	15	7	52	59
Apprch %	0	0	0			0	34.6	65.4			0	0	100			13.3	86.7	0					
Total %	0	0	0		0	0	17.3	32.7		50	0	0	21.2		21.2	3.8	25	0		28.8	11.9	88.1	

	I-215 Northbound On Ramp Southbound				Harley Knox Boulevard Westbound				I-215 Northbound Off Ramp Northbound				Harley Knox Boulevard Eastbound				
Start Time	Left	Thru	Right	App. Total	Left	Thru	Right	App. Total	Left	Thru	Right	App. Total	Left	Thru	Right	App. Total	Int. Total
Peak Hour Analysis From 07:00 AM to 07:45 AM - Peak 1 of 1																	
Peak Hour for Entire Intersection Begins at 07:00 AM																	
07:00 AM	0	0	0	0	0	**1**	2	3	0	0	**4**	**4**	0	1	0	1	8
07:15 AM	0	0	0	0	0	1	**3**	**4**	0	0	0	0	0	1	0	1	5
07:30 AM	0	0	0	0	0	1	3	4	0	0	1	1	**1**	**4**	0	**5**	**10**
07:45 AM	0	0	0	0	0	0	1	1	0	0	2	2	1	1	0	2	5
Total Volume	0	0	0	0	0	3	9	12	0	0	7	7	2	7	0	9	28
% App. Total	0	0	0		0	25	75		0	0	100		22.2	77.8	0		
PHF	.000	.000	.000	.000	.000	.750	.750	.750	.000	.000	.438	.438	.500	.438	.000	.450	.700

Counts Unlimited
PO Box 1178
Corona, CA 92878
(951) 268-6268

City of Perris
N/S: I-215 Northbound Ramps
E/W: Harley Knox Boulevard
Weather: Clear

File Name : PER215NHAAM
Site Code : 05115699
Start Date : 12/16/2015
Page No : 2

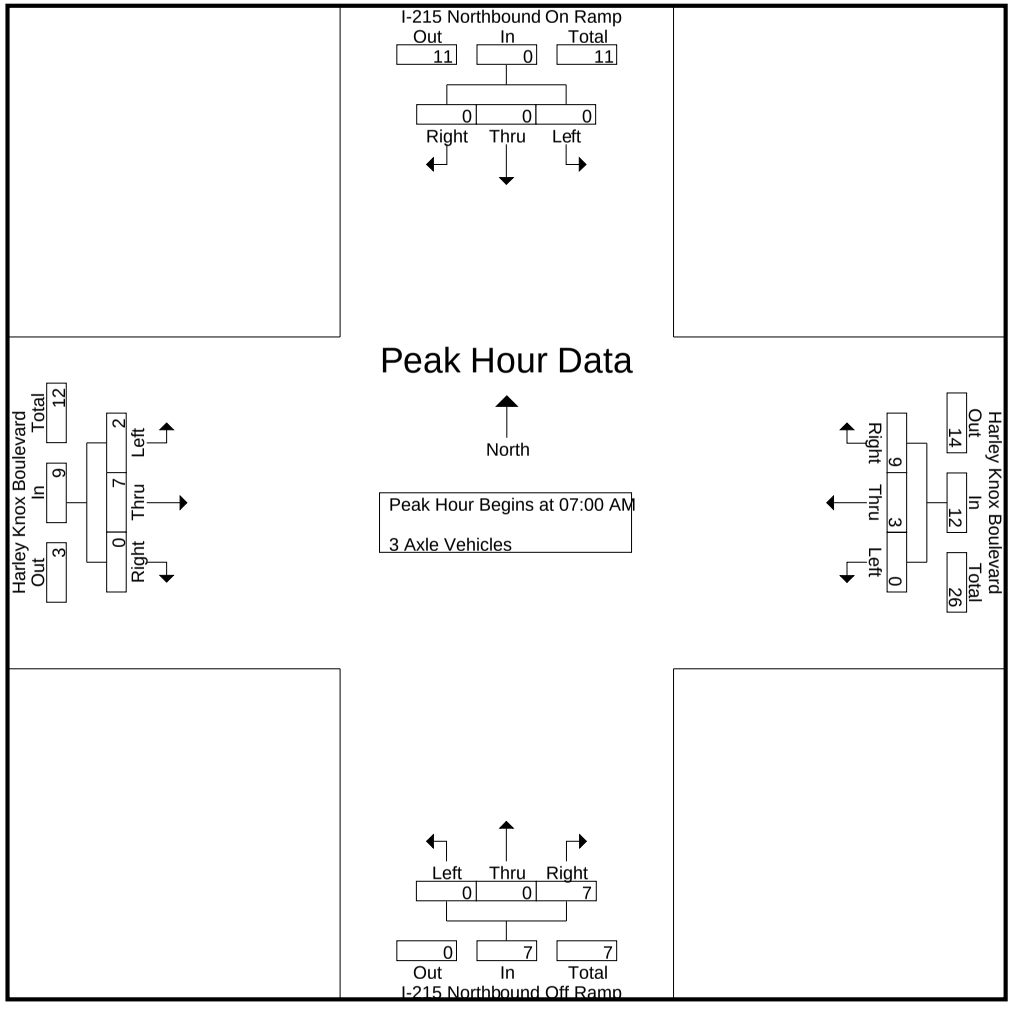

Counts Unlimited
PO Box 1178
Corona, CA 92878
(951) 268-6268

City of Perris
N/S: I-215 Northbound Ramps
E/W: Harley Knox Boulevard
Weather: Clear

File Name : PER215NHAAM
Site Code : 05115699
Start Date : 12/16/2015
Page No : 3

	I-215 Northbound On Ramp Southbound				Harley Knox Boulevard Westbound				I-215 Northbound Off Ramp Northbound				Harley Knox Boulevard Eastbound				
Start Time	Left	Thru	Right	App. Total	Left	Thru	Right	App. Total	Left	Thru	Right	App. Total	Left	Thru	Right	App. Total	Int. Total
Peak Hour Analysis From 07:00 AM to 07:45 AM - Peak 1 of 1																	
Peak Hour for Each Approach Begins at:																	
	07:00 AM				07:00 AM				07:00 AM				07:00 AM				
+0 mins.	0	0	0	0	0	**1**	2	3	0	0	**4**	**4**	0	1	0	1	
+15 mins.	0	0	0	0	0	1	**3**	**4**	0	0	0	0	0	1	0	1	
+30 mins.	0	0	0	0	0	1	3	4	0	0	1	1	**1**	**4**	0	**5**	
+45 mins.	0	0	0	0	0	0	1	1	0	0	2	2	1	1	0	2	
Total Volume	0	0	0	0	0	3	9	12	0	0	7	7	2	7	0	9	
% App. Total	0	0	0		0	25	75		0	0	100		22.2	77.8	0		
PHF	.000	.000	.000	.000	.000	.750	.750	.750	.000	.000	.438	.438	.500	.438	.000	.450	

Counts Unlimited
PO Box 1178
Corona, CA 92878
(951) 268-6268

City of Perris
N/S: I-215 Northbound Ramps
E/W: Harley Knox Boulevard
Weather: Clear

File Name : PER215NHAAM
Site Code : 05115699
Start Date : 12/16/2015
Page No : 1

Groups Printed- 4+ Axle Trucks

	I-215 Northbound On Ramp Southbound					Harley Knox Boulevard Westbound					I-215 Northbound Off Ramp Northbound					Harley Knox Boulevard Eastbound							
Start Time	Left	Thru	Right	RTOR	App. Total	Left	Thru	Right	RTOR	App. Total	Left	Thru	Right	RTOR	App. Total	Left	Thru	Right	RTOR	App. Total	Exclu. Total	Inclu. Total	Int. Total
07:00 AM	0	0	0	0	0	0	3	7	1	10	0	0	3	3	3	0	8	0	0	8	4	21	25
07:15 AM	0	0	0	0	0	0	2	9	1	11	0	0	1	1	1	5	7	0	0	12	2	24	26
07:30 AM	0	0	0	0	0	0	6	8	0	14	0	0	3	2	3	4	5	0	0	9	2	26	28
07:45 AM	0	0	0	0	0	0	3	7	0	10	0	0	2	1	2	3	6	0	0	9	1	21	22
Total	0	0	0	0	0	0	14	31	2	45	0	0	9	7	9	12	26	0	0	38	9	92	101
08:00 AM	0	0	0	0	0	0	6	13	0	19	0	0	2	1	2	3	8	0	0	11	1	32	33
08:15 AM	0	0	0	0	0	0	2	6	0	8	0	0	4	2	4	2	4	0	0	6	2	18	20
08:30 AM	0	0	0	0	0	0	2	5	0	7	0	0	4	3	4	0	5	0	0	5	3	16	19
08:45 AM	0	0	0	0	0	0	3	9	0	12	1	0	2	1	3	3	11	0	0	14	1	29	30
Total	0	0	0	0	0	0	13	33	0	46	1	0	12	7	13	8	28	0	0	36	7	95	102
Grand Total	0	0	0	0	0	0	27	64	2	91	1	0	21	14	22	20	54	0	0	74	16	187	203
Apprch %	0	0	0			0	29.7	70.3			4.5	0	95.5			27	73	0					
Total %	0	0	0		0	0	14.4	34.2		48.7	0.5	0	11.2		11.8	10.7	28.9	0		39.6	7.9	92.1	

	I-215 Northbound On Ramp Southbound				Harley Knox Boulevard Westbound				I-215 Northbound Off Ramp Northbound				Harley Knox Boulevard Eastbound				
Start Time	Left	Thru	Right	App. Total	Left	Thru	Right	App. Total	Left	Thru	Right	App. Total	Left	Thru	Right	App. Total	Int. Total
Peak Hour Analysis From 07:00 AM to 07:45 AM - Peak 1 of 1																	
Peak Hour for Entire Intersection Begins at 07:00 AM																	
07:00 AM	0	0	0	0	0	3	7	10	0	0	**3**	**3**	0	**8**	0	8	21
07:15 AM	0	0	0	0	0	2	**9**	11	0	0	1	1	**5**	7	0	**12**	24
07:30 AM	0	0	0	0	0	**6**	8	**14**	0	0	3	3	4	5	0	9	**26**
07:45 AM	0	0	0	0	0	3	7	10	0	0	2	2	3	6	0	9	21
Total Volume	0	0	0	0	0	14	31	45	0	0	9	9	12	26	0	38	92
% App. Total	0	0	0		0	31.1	68.9		0	0	100		31.6	68.4	0		
PHF	.000	.000	.000	.000	.000	.583	.861	.804	.000	.000	.750	.750	.600	.813	.000	.792	.885

Counts Unlimited
PO Box 1178
Corona, CA 92878
(951) 268-6268

City of Perris
N/S: I-215 Northbound Ramps
E/W: Harley Knox Boulevard
Weather: Clear

File Name : PER215NHAAM
Site Code : 05115699
Start Date : 12/16/2015
Page No : 2

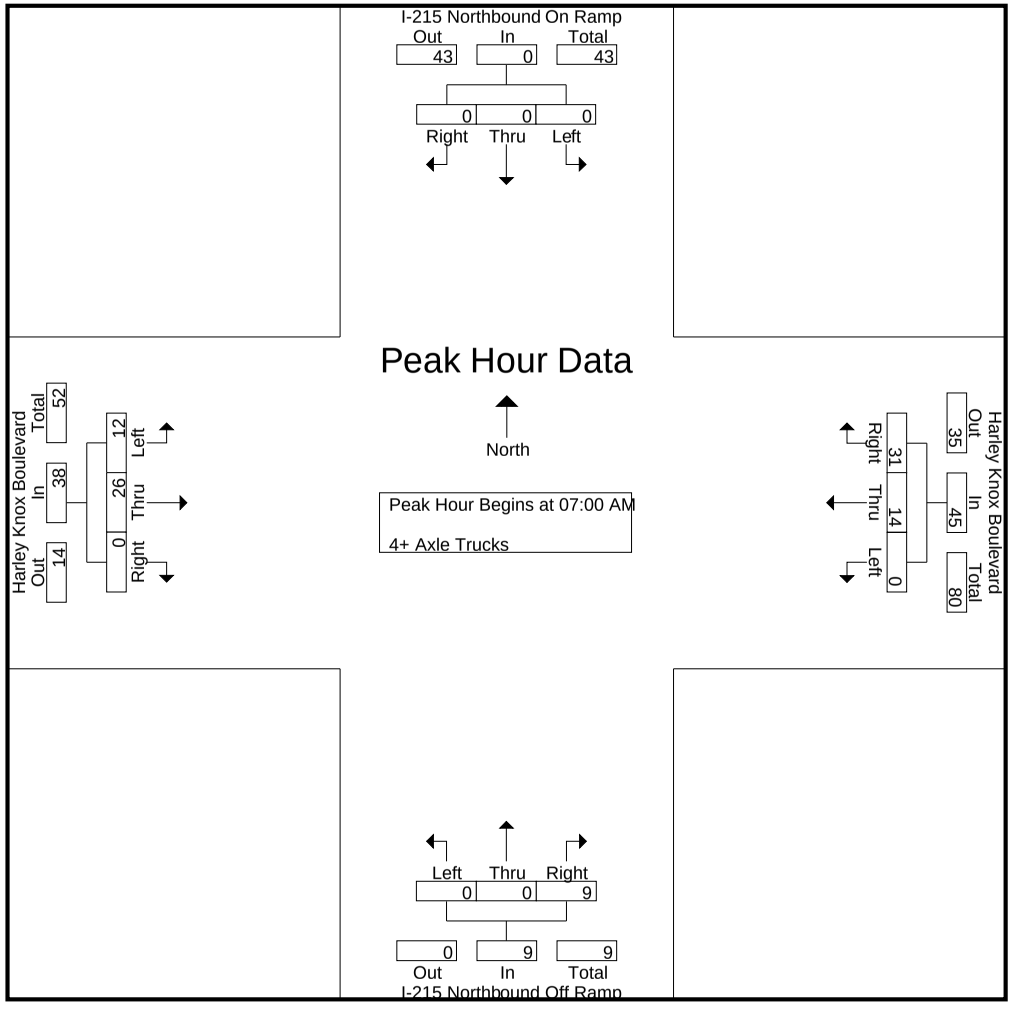

Counts Unlimited
PO Box 1178
Corona, CA 92878
(951) 268-6268

City of Perris
N/S: I-215 Northbound Ramps
E/W: Harley Knox Boulevard
Weather: Clear

File Name : PER215NHAAM
Site Code : 05115699
Start Date : 12/16/2015
Page No : 3

	I-215 Northbound On Ramp Southbound				Harley Knox Boulevard Westbound				I-215 Northbound Off Ramp Northbound				Harley Knox Boulevard Eastbound				
Start Time	Left	Thru	Right	App. Total	Left	Thru	Right	App. Total	Left	Thru	Right	App. Total	Left	Thru	Right	App. Total	Int. Total
Peak Hour Analysis From 07:00 AM to 07:45 AM - Peak 1 of 1																	
Peak Hour for Each Approach Begins at:																	
	07:00 AM				07:00 AM				07:00 AM				07:00 AM				
+0 mins.	0	0	0	0	0	3	7	10	0	0	**3**	**3**	0	**8**	0	8	
+15 mins.	0	0	0	0	0	2	**9**	11	0	0	1	1	**5**	7	0	**12**	
+30 mins.	0	0	0	0	0	**6**	8	**14**	0	0	3	3	4	5	0	9	
+45 mins.	0	0	0	0	0	3	7	10	0	0	2	2	3	6	0	9	
Total Volume	0	0	0	0	0	14	31	45	0	0	9	9	12	26	0	38	
% App. Total	0	0	0		0	31.1	68.9		0	0	100		31.6	68.4	0		
PHF	.000	.000	.000	.000	.000	.583	.861	.804	.000	.000	.750	.750	.600	.813	.000	.792	

Counts Unlimited
PO Box 1178
Corona, CA 92878
(951) 268-6268

City of Perris
N/S: I-215 Northbound Ramps
E/W: Harley Knox Boulevard
Weather: Clear

File Name : PER215NHAPM
Site Code : 05115699
Start Date : 12/16/2015
Page No : 1

Groups Printed- Passenger Vehicles - Large 2 Axle Vehicles - 3 Axle Vehicles - 4+ Axle Trucks

	I-215 Northbound On Ramp Southbound					Harley Knox Boulevard Westbound					I-215 Northbound Off Ramp Northbound					Harley Knox Boulevard Eastbound							
Start Time	Left	Thru	Right	RTOR	App. Total	Left	Thru	Right	RTOR	App. Total	Left	Thru	Right	RTOR	App. Total	Left	Thru	Right	RTOR	App. Total	Exclu. Total	Inclu. Total	Int. Total
04:00 PM	0	0	0	0	0	0	60	95	2	155	3	0	26	21	29	47	94	0	0	141	23	325	348
04:15 PM	0	0	0	0	0	0	51	73	4	124	1	0	45	40	46	48	109	0	0	157	44	327	371
04:30 PM	0	0	0	0	0	0	82	124	3	206	2	0	53	45	55	66	125	0	0	191	48	452	500
04:45 PM	0	0	0	0	0	0	87	141	2	228	1	0	32	28	33	42	103	0	0	145	30	406	436
Total	0	0	0	0	0	0	280	433	11	713	7	0	156	134	163	203	431	0	0	634	145	1510	1655
05:00 PM	0	0	0	0	0	0	63	97	0	160	0	0	33	28	33	58	82	0	0	140	28	333	361
05:15 PM	0	0	0	0	0	0	49	58	0	107	1	0	26	23	27	31	80	0	0	111	23	245	268
05:30 PM	0	0	0	0	0	0	72	84	0	156	1	0	58	53	59	40	111	0	0	151	53	366	419
05:45 PM	0	0	0	0	0	0	66	92	3	158	1	0	69	66	70	34	104	0	0	138	69	366	435
Total	0	0	0	0	0	0	250	331	3	581	3	0	186	170	189	163	377	0	0	540	173	1310	1483
Grand Total	0	0	0	0	0	0	530	764	14	1294	10	0	342	304	352	366	808	0	0	1174	318	2820	3138
Apprch %	0	0	0			0	41	59			2.8	0	97.2			31.2	68.8	0					
Total %	0	0	0		0	0	18.8	27.1		45.9	0.4	0	12.1		12.5	13	28.7	0		41.6	10.1	89.9	
Passenger Vehicles	0	0	0		0	0	506	678		1197	7	0	307		592	343	728	0		1071	0	0	2860
% Passenger Vehicles	0	0	0	0	0	0	95.5	88.7	92.9	91.5	70	0	89.8	91.4	90.2	93.7	90.1	0	0	91.2	0	0	91.1
Large 2 Axle Vehicles	0	0	0		0	0	5	9		14	0	0	4		7	4	17	0		21	0	0	42
% Large 2 Axle Vehicles	0	0	0	0	0	0	0.9	1.2	0	1.1	0	0	1.2	1	1.1	1.1	2.1	0	0	1.8	0	0	1.3
3 Axle Vehicles	0	0	0		0	0	1	19		20	0	0	26		46	4	18	0		22	0	0	88
% 3 Axle Vehicles	0	0	0	0	0	0	0.2	2.5	0	1.5	0	0	7.6	6.6	7	1.1	2.2	0	0	1.9	0	0	2.8
4+ Axle Trucks	0	0	0		0	0	18	58		77	3	0	5		11	15	45	0		60	0	0	148
% 4+ Axle Trucks	0	0	0	0	0	0	3.4	7.6	7.1	5.9	30	0	1.5	1	1.7	4.1	5.6	0	0	5.1	0	0	4.7

	I-215 Northbound On Ramp Southbound				Harley Knox Boulevard Westbound				I-215 Northbound Off Ramp Northbound				Harley Knox Boulevard Eastbound				
Start Time	Left	Thru	Right	App. Total	Left	Thru	Right	App. Total	Left	Thru	Right	App. Total	Left	Thru	Right	App. Total	Int. Total
Peak Hour Analysis From 04:00 PM to 05:45 PM - Peak 1 of 1																	
Peak Hour for Entire Intersection Begins at 04:15 PM																	
04:15 PM	0	0	0	0	0	51	73	124	1	0	45	46	48	109	0	157	327
04:30 PM	0	0	0	0	0	82	124	206	**2**	0	**53**	**55**	**66**	**125**	0	**191**	**452**
04:45 PM	0	0	0	0	0	**87**	**141**	**228**	1	0	32	33	42	103	0	145	406
05:00 PM	0	0	0	0	0	63	97	160	0	0	33	33	58	82	0	140	333
Total Volume	0	0	0	0	0	283	435	718	4	0	163	167	214	419	0	633	1518
% App. Total	0	0	0		0	39.4	60.6		2.4	0	97.6		33.8	66.2	0		
PHF	.000	.000	.000	.000	.000	.813	.771	.787	.500	.000	.769	.759	.811	.838	.000	.829	.840

Counts Unlimited
PO Box 1178
Corona, CA 92878
(951) 268-6268

City of Perris
N/S: I-215 Northbound Ramps
E/W: Harley Knox Boulevard
Weather: Clear

File Name : PER215NHAPM
Site Code : 05115699
Start Date : 12/16/2015
Page No : 2

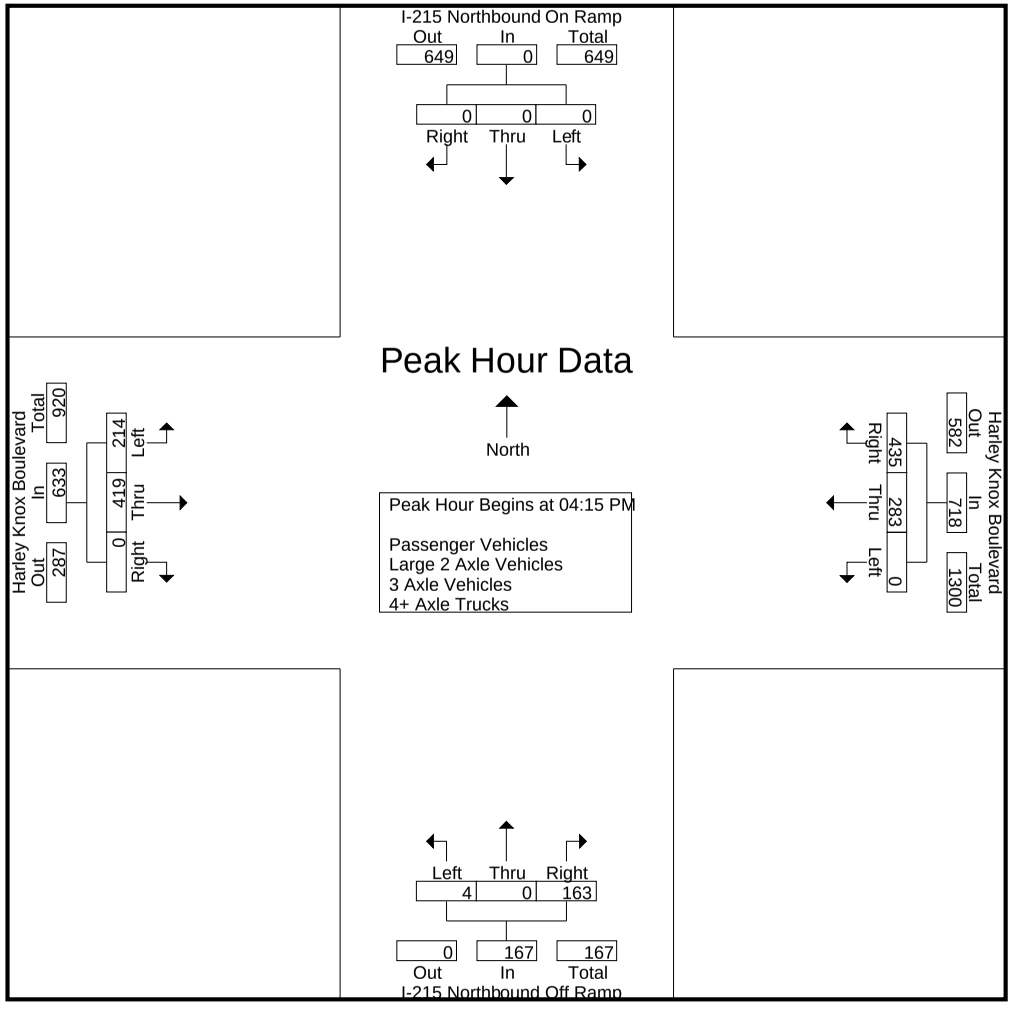

Counts Unlimited
PO Box 1178
Corona, CA 92878
(951) 268-6268

City of Perris
N/S: I-215 Northbound Ramps
E/W: Harley Knox Boulevard
Weather: Clear

File Name : PER215NHAPM
Site Code : 05115699
Start Date : 12/16/2015
Page No : 3

	I-215 Northbound On Ramp Southbound				Harley Knox Boulevard Westbound				I-215 Northbound Off Ramp Northbound				Harley Knox Boulevard Eastbound				
Start Time	Left	Thru	Right	App. Total	Left	Thru	Right	App. Total	Left	Thru	Right	App. Total	Left	Thru	Right	App. Total	Int. Total
Peak Hour Analysis From 04:00 PM to 05:45 PM - Peak 1 of 1																	
Peak Hour for Each Approach Begins at:																	
	04:00 PM				04:15 PM				05:00 PM				04:00 PM				
+0 mins.	0	0	0	0	0	51	73	124	0	0	33	33	47	94	0	141	
+15 mins.	0	0	0	0	0	82	124	206	**1**	0	26	27	48	109	0	157	
+30 mins.	0	0	0	0	0	**87**	**141**	**228**	1	0	58	59	**66**	**125**	0	**191**	
+45 mins.	0	0	0	0	0	63	97	160	1	0	**69**	**70**	42	103	0	145	
Total Volume	0	0	0	0	0	283	435	718	3	0	186	189	203	431	0	634	
% App. Total	0	0	0		0	39.4	60.6		1.6	0	98.4		32	68	0		
PHF	.000	.000	.000	.000	.000	.813	.771	.787	.750	.000	.674	.675	.769	.862	.000	.830	

Counts Unlimited
PO Box 1178
Corona, CA 92878
(951) 268-6268

City of Perris
N/S: I-215 Northbound Ramps
E/W: Harley Knox Boulevard
Weather: Clear

File Name : PER215NHAPM
Site Code : 05115699
Start Date : 12/16/2015
Page No : 1

Groups Printed- Passenger Vehicles

	I-215 Northbound On Ramp Southbound					Harley Knox Boulevard Westbound					I-215 Northbound Off Ramp Northbound					Harley Knox Boulevard Eastbound							
Start Time	Left	Thru	Right	RTOR	App. Total	Left	Thru	Right	RTOR	App. Total	Left	Thru	Right	RTOR	App. Total	Left	Thru	Right	RTOR	App. Total	Exclu. Total	Inclu. Total	Int. Total
04:00 PM	0	0	0	0	0	0	57	85	2	142	2	0	22	20	24	42	84	0	0	126	22	292	314
04:15 PM	0	0	0	0	0	0	46	58	3	104	1	0	38	35	39	44	99	0	0	143	38	286	324
04:30 PM	0	0	0	0	0	0	76	111	3	187	1	0	45	39	46	64	107	0	0	171	42	404	446
04:45 PM	0	0	0	0	0	0	86	127	2	213	0	0	29	26	29	41	91	0	0	132	28	374	402
Total	0	0	0	0	0	0	265	381	10	646	4	0	134	120	138	191	381	0	0	572	130	1356	1486
05:00 PM	0	0	0	0	0	0	59	95	0	154	0	0	28	23	28	55	73	0	0	128	23	310	333
05:15 PM	0	0	0	0	0	0	48	50	0	98	1	0	25	22	26	29	72	0	0	101	22	225	247
05:30 PM	0	0	0	0	0	0	70	72	0	142	1	0	54	50	55	36	102	0	0	138	50	335	385
05:45 PM	0	0	0	0	0	0	64	80	3	144	1	0	66	63	67	32	100	0	0	132	66	343	409
Total	0	0	0	0	0	0	241	297	3	538	3	0	173	158	176	152	347	0	0	499	161	1213	1374
Grand Total	0	0	0	0	0	0	506	678	13	1184	7	0	307	278	314	343	728	0	0	1071	291	2569	2860
Apprch %	0	0	0			0	42.7	57.3			2.2	0	97.8			32	68	0					
Total %	0	0	0		0	0	19.7	26.4		46.1	0.3	0	12		12.2	13.4	28.3	0		41.7	10.2	89.8	

	I-215 Northbound On Ramp Southbound				Harley Knox Boulevard Westbound				I-215 Northbound Off Ramp Northbound				Harley Knox Boulevard Eastbound				
Start Time	Left	Thru	Right	App. Total	Left	Thru	Right	App. Total	Left	Thru	Right	App. Total	Left	Thru	Right	App. Total	Int. Total
Peak Hour Analysis From 04:15 PM to 05:00 PM - Peak 1 of 1																	
Peak Hour for Entire Intersection Begins at 04:15 PM																	
04:15 PM	0	0	0	0	0	46	58	104	**1**	0	38	39	44	99	0	143	286
04:30 PM	0	0	0	0	0	76	111	187	1	0	**45**	**46**	**64**	**107**	0	**171**	**404**
04:45 PM	0	0	0	0	0	**86**	**127**	**213**	0	0	29	29	41	91	0	132	374
05:00 PM	0	0	0	0	0	59	95	154	0	0	28	28	55	73	0	128	310
Total Volume	0	0	0	0	0	267	391	658	2	0	140	142	204	370	0	574	1374
% App. Total	0	0	0		0	40.6	59.4		1.4	0	98.6		35.5	64.5	0		
PHF	.000	.000	.000	.000	.000	.776	.770	.772	.500	.000	.778	.772	.797	.864	.000	.839	.850

Counts Unlimited
PO Box 1178
Corona, CA 92878
(951) 268-6268

City of Perris
N/S: I-215 Northbound Ramps
E/W: Harley Knox Boulevard
Weather: Clear

File Name : PER215NHAPM
Site Code : 05115699
Start Date : 12/16/2015
Page No : 2

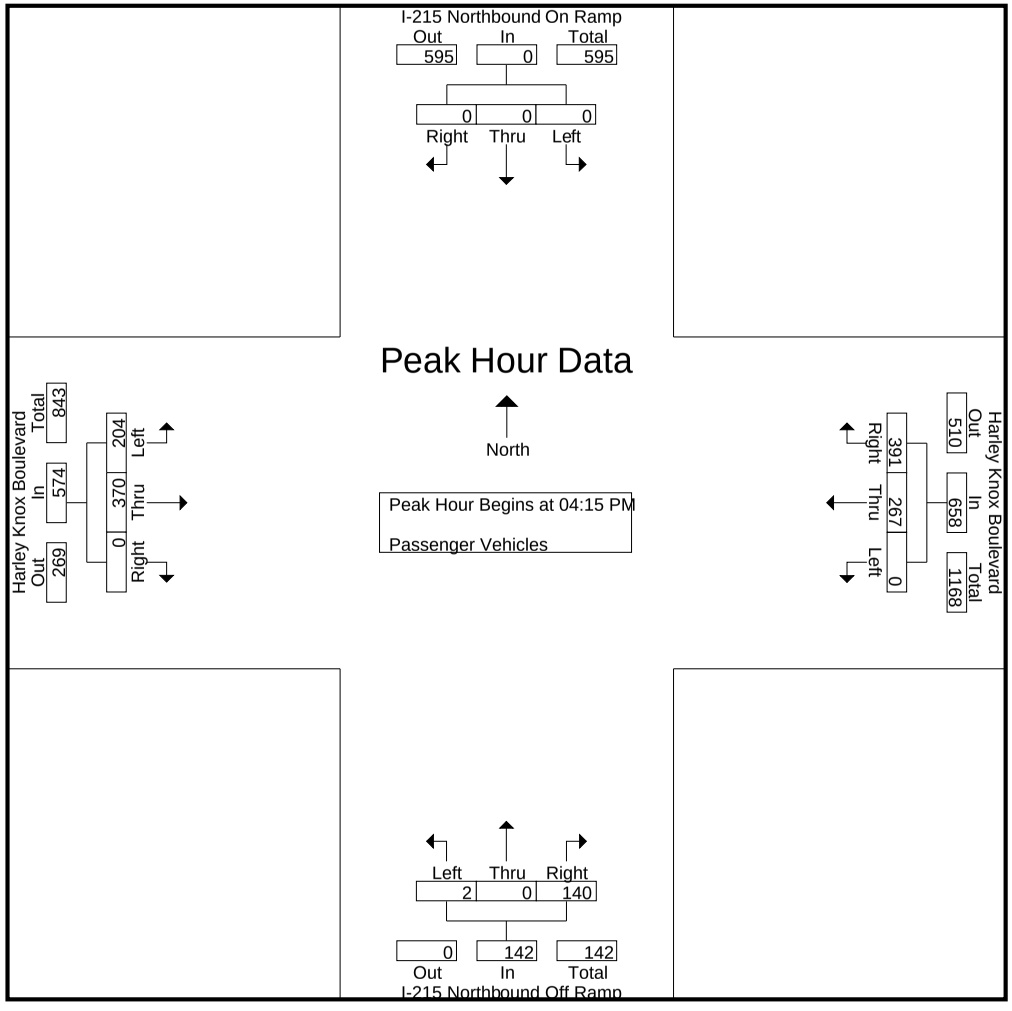

Counts Unlimited
PO Box 1178
Corona, CA 92878
(951) 268-6268

City of Perris
N/S: I-215 Northbound Ramps
E/W: Harley Knox Boulevard
Weather: Clear

File Name : PER215NHAPM
Site Code : 05115699
Start Date : 12/16/2015
Page No : 3

	I-215 Northbound On Ramp Southbound				Harley Knox Boulevard Westbound				I-215 Northbound Off Ramp Northbound				Harley Knox Boulevard Eastbound				
Start Time	Left	Thru	Right	App. Total	Left	Thru	Right	App. Total	Left	Thru	Right	App. Total	Left	Thru	Right	App. Total	Int. Total
Peak Hour Analysis From 04:15 PM to 05:00 PM - Peak 1 of 1																	
Peak Hour for Each Approach Begins at:																	
	04:15 PM				04:15 PM				04:15 PM				04:15 PM				
+0 mins.	0	0	0	0	0	46	58	104	**1**	0	38	39	44	99	0	143	
+15 mins.	0	0	0	0	0	76	111	187	1	0	**45**	**46**	**64**	**107**	0	**171**	
+30 mins.	0	0	0	0	0	**86**	**127**	**213**	0	0	29	29	41	91	0	132	
+45 mins.	0	0	0	0	0	59	95	154	0	0	28	28	55	73	0	128	
Total Volume	0	0	0	0	0	267	391	658	2	0	140	142	204	370	0	574	
% App. Total	0	0	0		0	40.6	59.4		1.4	0	98.6		35.5	64.5	0		
PHF	.000	.000	.000	.000	.000	.776	.770	.772	.500	.000	.778	.772	.797	.864	.000	.839	

Counts Unlimited
PO Box 1178
Corona, CA 92878
(951) 268-6268

City of Perris
N/S: I-215 Northbound Ramps
E/W: Harley Knox Boulevard
Weather: Clear

File Name : PER215NHAPM
Site Code : 05115699
Start Date : 12/16/2015
Page No : 1

Groups Printed- Large 2 Axle Vehicles

	I-215 Northbound On Ramp Southbound					Harley Knox Boulevard Westbound					I-215 Northbound Off Ramp Northbound					Harley Knox Boulevard Eastbound							
Start Time	Left	Thru	Right	RTOR	App. Total	Left	Thru	Right	RTOR	App. Total	Left	Thru	Right	RTOR	App. Total	Left	Thru	Right	RTOR	App. Total	Exclu. Total	Inclu. Total	Int. Total
04:00 PM	0	0	0	0	0	0	1	2	0	3	0	0	2	1	2	0	4	0	0	4	1	9	10
04:15 PM	0	0	0	0	0	0	0	2	0	2	0	0	1	1	1	1	3	0	0	4	1	7	8
04:30 PM	0	0	0	0	0	0	4	1	0	5	0	0	0	0	0	0	1	0	0	1	0	6	6
04:45 PM	0	0	0	0	0	0	0	2	0	2	0	0	0	0	0	0	2	0	0	2	0	4	4
Total	0	0	0	0	0	0	5	7	0	12	0	0	3	2	3	1	10	0	0	11	2	26	28
05:00 PM	0	0	0	0	0	0	0	0	0	0	0	0	0	0	0	1	1	0	0	2	0	2	2
05:15 PM	0	0	0	0	0	0	0	1	0	1	0	0	0	0	0	1	2	0	0	3	0	4	4
05:30 PM	0	0	0	0	0	0	0	0	0	0	0	0	0	0	0	1	2	0	0	3	0	3	3
05:45 PM	0	0	0	0	0	0	0	1	0	1	0	0	1	1	1	0	2	0	0	2	1	4	5
Total	0	0	0	0	0	0	0	2	0	2	0	0	1	1	1	3	7	0	0	10	1	13	14
Grand Total	0	0	0	0	0	0	5	9	0	14	0	0	4	3	4	4	17	0	0	21	3	39	42
Apprch %	0	0	0			0	35.7	64.3			0	0	100			19	81	0					
Total %	0	0	0		0	0	12.8	23.1		35.9	0	0	10.3		10.3	10.3	43.6	0		53.8	7.1	92.9	

	I-215 Northbound On Ramp Southbound				Harley Knox Boulevard Westbound				I-215 Northbound Off Ramp Northbound				Harley Knox Boulevard Eastbound				
Start Time	Left	Thru	Right	App. Total	Left	Thru	Right	App. Total	Left	Thru	Right	App. Total	Left	Thru	Right	App. Total	Int. Total
Peak Hour Analysis From 04:15 PM to 05:00 PM - Peak 1 of 1																	
Peak Hour for Entire Intersection Begins at 04:15 PM																	
04:15 PM	0	0	0	0	0	0	**2**	2	0	0	**1**	**1**	**1**	**3**	0	**4**	**7**
04:30 PM	0	0	0	0	0	**4**	1	**5**	0	0	0	0	0	1	0	1	6
04:45 PM	0	0	0	0	0	0	2	2	0	0	0	0	0	2	0	2	4
05:00 PM	0	0	0	0	0	0	0	0	0	0	0	0	1	1	0	2	2
Total Volume	0	0	0	0	0	4	5	9	0	0	1	1	2	7	0	9	19
% App. Total	0	0	0		0	44.4	55.6		0	0	100		22.2	77.8	0		
PHF	.000	.000	.000	.000	.000	.250	.625	.450	.000	.000	.250	.250	.500	.583	.000	.563	.679

Counts Unlimited
PO Box 1178
Corona, CA 92878
(951) 268-6268

City of Perris
N/S: I-215 Northbound Ramps
E/W: Harley Knox Boulevard
Weather: Clear

File Name : PER215NHAPM
Site Code : 05115699
Start Date : 12/16/2015
Page No : 2

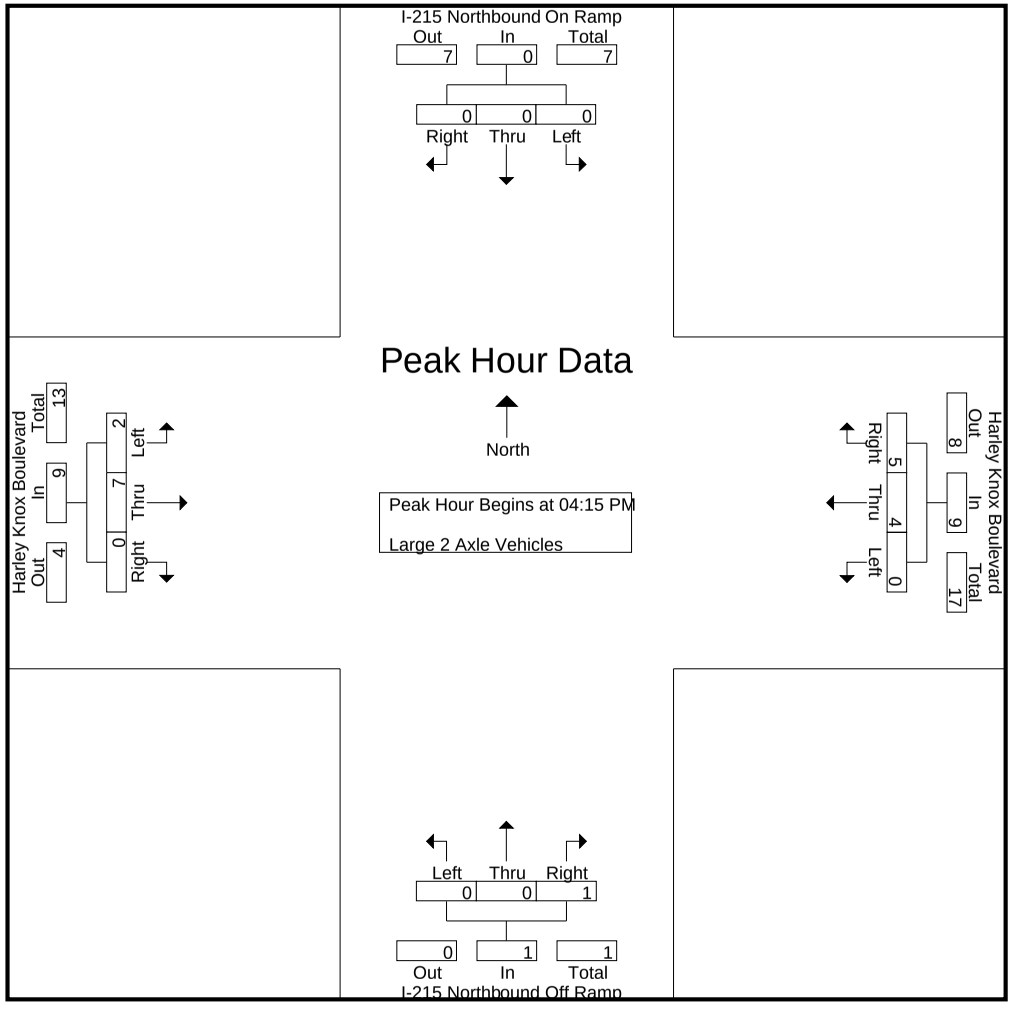

Counts Unlimited
PO Box 1178
Corona, CA 92878
(951) 268-6268

City of Perris
N/S: I-215 Northbound Ramps
E/W: Harley Knox Boulevard
Weather: Clear

File Name : PER215NHAPM
Site Code : 05115699
Start Date : 12/16/2015
Page No : 3

	I-215 Northbound On Ramp Southbound				Harley Knox Boulevard Westbound				I-215 Northbound Off Ramp Northbound				Harley Knox Boulevard Eastbound				
Start Time	Left	Thru	Right	App. Total	Left	Thru	Right	App. Total	Left	Thru	Right	App. Total	Left	Thru	Right	App. Total	Int. Total
Peak Hour Analysis From 04:15 PM to 05:00 PM - Peak 1 of 1																	
Peak Hour for Each Approach Begins at:																	
	04:15 PM				04:15 PM				04:15 PM				04:15 PM				
+0 mins.	0	0	0	0	0	0	**2**	2	0	0	**1**	**1**	**1**	**3**	0	**4**	
+15 mins.	0	0	0	0	0	**4**	1	**5**	0	0	0	0	0	1	0	1	
+30 mins.	0	0	0	0	0	0	2	2	0	0	0	0	0	2	0	2	
+45 mins.	0	0	0	0	0	0	0	0	0	0	0	0	1	1	0	2	
Total Volume	0	0	0	0	0	4	5	9	0	0	1	1	2	7	0	9	
% App. Total	0	0	0		0	44.4	55.6		0	0	100		22.2	77.8	0		
PHF	.000	.000	.000	.000	.000	.250	.625	.450	.000	.000	.250	.250	.500	.583	.000	.563	

Counts Unlimited
PO Box 1178
Corona, CA 92878
(951) 268-6268

City of Perris
N/S: I-215 Northbound Ramps
E/W: Harley Knox Boulevard
Weather: Clear

File Name : PER215NHAPM
Site Code : 05115699
Start Date : 12/16/2015
Page No : 1

Groups Printed- 3 Axle Vehicles

	I-215 Northbound On Ramp Southbound					Harley Knox Boulevard Westbound					I-215 Northbound Off Ramp Northbound					Harley Knox Boulevard Eastbound							
Start Time	Left	Thru	Right	RTOR	App. Total	Left	Thru	Right	RTOR	App. Total	Left	Thru	Right	RTOR	App. Total	Left	Thru	Right	RTOR	App. Total	Exclu. Total	Inclu. Total	Int. Total
04:00 PM	0	0	0	0	0	0	0	2	0	2	0	0	1	0	1	0	2	0	0	2	0	5	5
04:15 PM	0	0	0	0	0	0	1	3	0	4	0	0	5	3	5	1	0	0	0	1	3	10	13
04:30 PM	0	0	0	0	0	0	0	3	0	3	0	0	6	5	6	0	4	0	0	4	5	13	18
04:45 PM	0	0	0	0	0	0	0	3	0	3	0	0	3	2	3	0	2	0	0	2	2	8	10
Total	0	0	0	0	0	0	1	11	0	12	0	0	15	10	15	1	8	0	0	9	10	36	46
05:00 PM	0	0	0	0	0	0	0	1	0	1	0	0	5	5	5	2	5	0	0	7	5	13	18
05:15 PM	0	0	0	0	0	0	0	1	0	1	0	0	0	0	0	0	1	0	0	1	0	2	2
05:30 PM	0	0	0	0	0	0	0	3	0	3	0	0	4	3	4	1	3	0	0	4	3	11	14
05:45 PM	0	0	0	0	0	0	0	3	0	3	0	0	2	2	2	0	1	0	0	1	2	6	8
Total	0	0	0	0	0	0	0	8	0	8	0	0	11	10	11	3	10	0	0	13	10	32	42
Grand Total	0	0	0	0	0	0	1	19	0	20	0	0	26	20	26	4	18	0	0	22	20	68	88
Apprch %	0	0	0			0	5	95			0	0	100			18.2	81.8	0					
Total %	0	0	0		0	0	1.5	27.9		29.4	0	0	38.2		38.2	5.9	26.5	0		32.4	22.7	77.3	

	I-215 Northbound On Ramp Southbound				Harley Knox Boulevard Westbound				I-215 Northbound Off Ramp Northbound				Harley Knox Boulevard Eastbound				
Start Time	Left	Thru	Right	App. Total	Left	Thru	Right	App. Total	Left	Thru	Right	App. Total	Left	Thru	Right	App. Total	Int. Total
Peak Hour Analysis From 04:15 PM to 05:00 PM - Peak 1 of 1																	
Peak Hour for Entire Intersection Begins at 04:15 PM																	
04:15 PM	0	0	0	0	0	**1**	**3**	**4**	0	0	5	5	1	0	0	1	10
04:30 PM	0	0	0	0	0	0	3	3	0	0	**6**	**6**	0	4	0	4	**13**
04:45 PM	0	0	0	0	0	0	3	3	0	0	3	3	0	2	0	2	8
05:00 PM	0	0	0	0	0	0	1	1	0	0	5	5	**2**	**5**	0	**7**	13
Total Volume	0	0	0	0	0	1	10	11	0	0	19	19	3	11	0	14	44
% App. Total	0	0	0		0	9.1	90.9		0	0	100		21.4	78.6	0		
PHF	.000	.000	.000	.000	.000	.250	.833	.688	.000	.000	.792	.792	.375	.550	.000	.500	.846

Counts Unlimited
PO Box 1178
Corona, CA 92878
(951) 268-6268

City of Perris
N/S: I-215 Northbound Ramps
E/W: Harley Knox Boulevard
Weather: Clear

File Name : PER215NHAPM
Site Code : 05115699
Start Date : 12/16/2015
Page No : 2

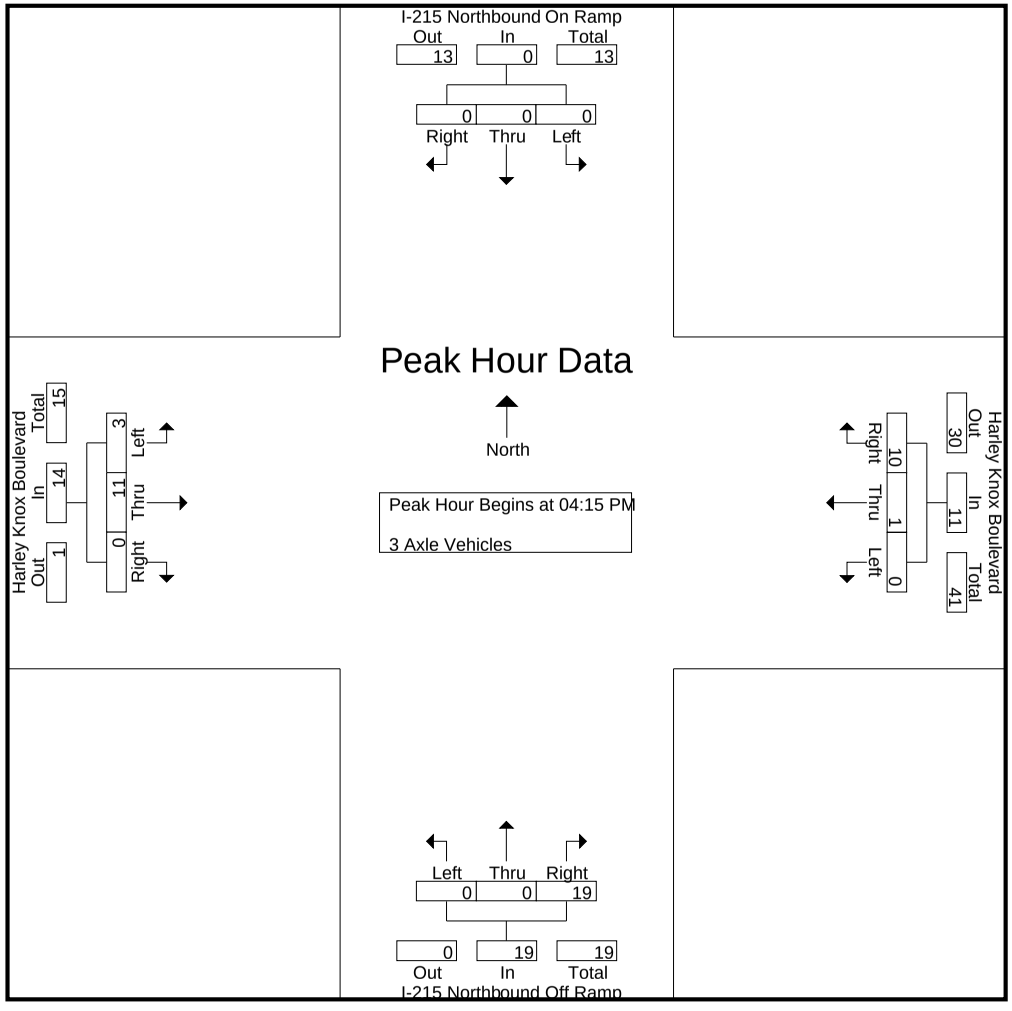

Counts Unlimited
PO Box 1178
Corona, CA 92878
(951) 268-6268

City of Perris
N/S: I-215 Northbound Ramps
E/W: Harley Knox Boulevard
Weather: Clear

File Name : PER215NHAPM
Site Code : 05115699
Start Date : 12/16/2015
Page No : 3

	I-215 Northbound On Ramp Southbound				Harley Knox Boulevard Westbound				I-215 Northbound Off Ramp Northbound				Harley Knox Boulevard Eastbound				
Start Time	Left	Thru	Right	App. Total	Left	Thru	Right	App. Total	Left	Thru	Right	App. Total	Left	Thru	Right	App. Total	Int. Total
Peak Hour Analysis From 04:15 PM to 05:00 PM - Peak 1 of 1																	
Peak Hour for Each Approach Begins at:																	
	04:15 PM				04:15 PM				04:15 PM				04:15 PM				
+0 mins.	0	0	0	0	0	**1**	**3**	**4**	0	0	5	5	1	0	0	1	
+15 mins.	0	0	0	0	0	0	3	3	0	0	**6**	**6**	0	4	0	4	
+30 mins.	0	0	0	0	0	0	3	3	0	0	3	3	0	2	0	2	
+45 mins.	0	0	0	0	0	0	1	1	0	0	5	5	**2**	**5**	0	**7**	
Total Volume	0	0	0	0	0	1	10	11	0	0	19	19	3	11	0	14	
% App. Total	0	0	0		0	9.1	90.9		0	0	100		21.4	78.6	0		
PHF	.000	.000	.000	.000	.000	.250	.833	.688	.000	.000	.792	.792	.375	.550	.000	.500	

Counts Unlimited
PO Box 1178
Corona, CA 92878
(951) 268-6268

City of Perris
N/S: I-215 Northbound Ramps
E/W: Harley Knox Boulevard
Weather: Clear

File Name : PER215NHAPM
Site Code : 05115699
Start Date : 12/16/2015
Page No : 1

Groups Printed- 4+ Axle Trucks

	I-215 Northbound On Ramp Southbound					Harley Knox Boulevard Westbound					I-215 Northbound Off Ramp Northbound					Harley Knox Boulevard Eastbound							
Start Time	Left	Thru	Right	RTOR	App. Total	Left	Thru	Right	RTOR	App. Total	Left	Thru	Right	RTOR	App. Total	Left	Thru	Right	RTOR	App. Total	Exclu. Total	Inclu. Total	Int. Total
04:00 PM	0	0	0	0	0	0	2	6	0	8	1	0	1	0	2	5	4	0	0	9	0	19	19
04:15 PM	0	0	0	0	0	0	4	10	1	14	0	0	1	1	1	2	7	0	0	9	2	24	26
04:30 PM	0	0	0	0	0	0	2	9	0	11	1	0	2	1	3	2	13	0	0	15	1	29	30
04:45 PM	0	0	0	0	0	0	1	9	0	10	1	0	0	0	1	1	8	0	0	9	0	20	20
Total	0	0	0	0	0	0	9	34	1	43	3	0	4	2	7	10	32	0	0	42	3	92	95
05:00 PM	0	0	0	0	0	0	4	1	0	5	0	0	0	0	0	0	3	0	0	3	0	8	8
05:15 PM	0	0	0	0	0	0	1	6	0	7	0	0	1	1	1	1	5	0	0	6	1	14	15
05:30 PM	0	0	0	0	0	0	2	9	0	11	0	0	0	0	0	2	4	0	0	6	0	17	17
05:45 PM	0	0	0	0	0	0	2	8	0	10	0	0	0	0	0	2	1	0	0	3	0	13	13
Total	0	0	0	0	0	0	9	24	0	33	0	0	1	1	1	5	13	0	0	18	1	52	53
Grand Total	0	0	0	0	0	0	18	58	1	76	3	0	5	3	8	15	45	0	0	60	4	144	148
Apprch %	0	0	0			0	23.7	76.3			37.5	0	62.5			25	75	0					
Total %	0	0	0		0	0	12.5	40.3		52.8	2.1	0	3.5		5.6	10.4	31.2	0		41.7	2.7	97.3	

	I-215 Northbound On Ramp Southbound				Harley Knox Boulevard Westbound				I-215 Northbound Off Ramp Northbound				Harley Knox Boulevard Eastbound				
Start Time	Left	Thru	Right	App. Total	Left	Thru	Right	App. Total	Left	Thru	Right	App. Total	Left	Thru	Right	App. Total	Int. Total
Peak Hour Analysis From 04:15 PM to 05:00 PM - Peak 1 of 1																	
Peak Hour for Entire Intersection Begins at 04:15 PM																	
04:15 PM	0	0	0	0	0	**4**	**10**	**14**	0	0	1	1	**2**	7	0	9	24
04:30 PM	0	0	0	0	0	2	9	11	**1**	0	**2**	**3**	2	**13**	0	**15**	**29**
04:45 PM	0	0	0	0	0	1	9	10	1	0	0	1	1	8	0	9	20
05:00 PM	0	0	0	0	0	4	1	5	0	0	0	0	0	3	0	3	8
Total Volume	0	0	0	0	0	11	29	40	2	0	3	5	5	31	0	36	81
% App. Total	0	0	0		0	27.5	72.5		40	0	60		13.9	86.1	0		
PHF	.000	.000	.000	.000	.000	.688	.725	.714	.500	.000	.375	.417	.625	.596	.000	.600	.698

Counts Unlimited
PO Box 1178
Corona, CA 92878
(951) 268-6268

City of Perris
N/S: I-215 Northbound Ramps
E/W: Harley Knox Boulevard
Weather: Clear

File Name : PER215NHAPM
Site Code : 05115699
Start Date : 12/16/2015
Page No : 2

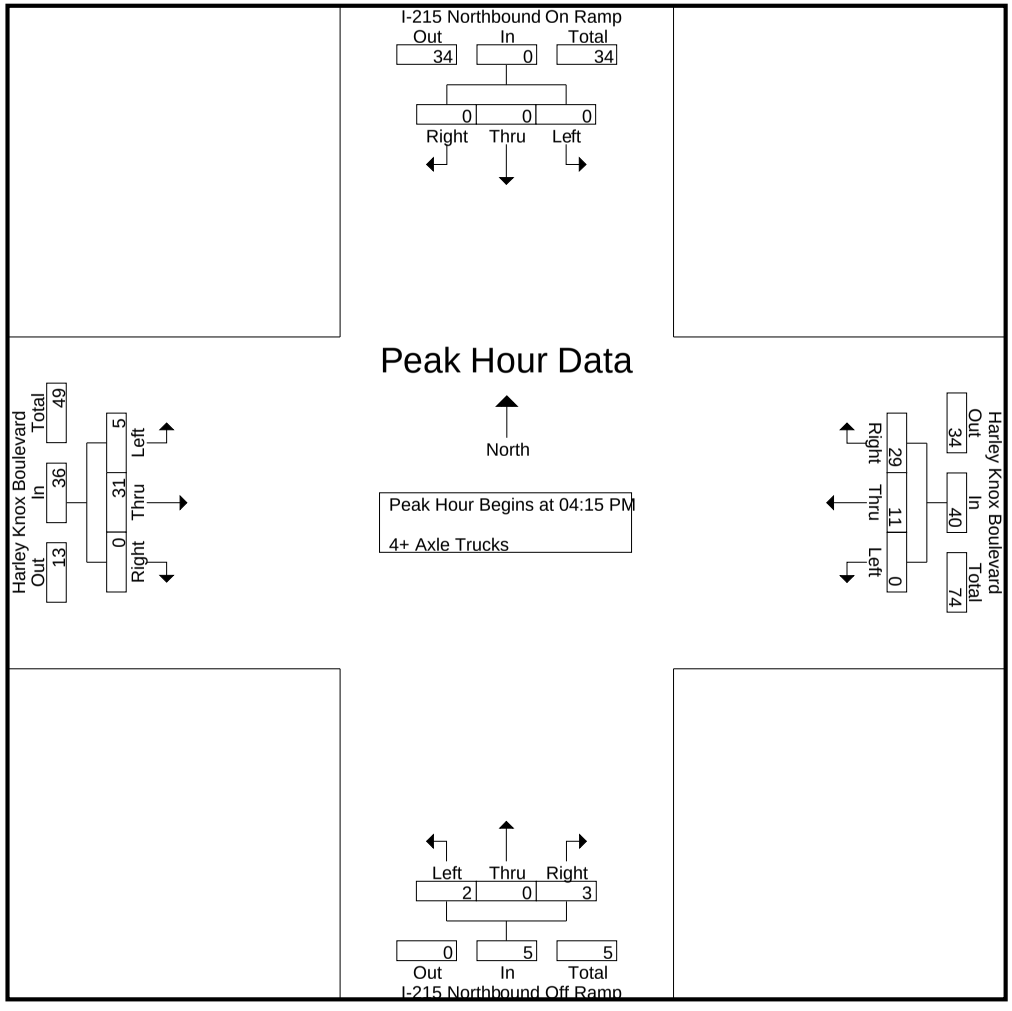

Counts Unlimited
PO Box 1178
Corona, CA 92878
(951) 268-6268

City of Perris
N/S: I-215 Northbound Ramps
E/W: Harley Knox Boulevard
Weather: Clear

File Name : PER215NHAPM
Site Code : 05115699
Start Date : 12/16/2015
Page No : 3

	I-215 Northbound On Ramp Southbound				Harley Knox Boulevard Westbound				I-215 Northbound Off Ramp Northbound				Harley Knox Boulevard Eastbound				
Start Time	Left	Thru	Right	App. Total	Left	Thru	Right	App. Total	Left	Thru	Right	App. Total	Left	Thru	Right	App. Total	Int. Total
Peak Hour Analysis From 04:15 PM to 05:00 PM - Peak 1 of 1																	
Peak Hour for Each Approach Begins at:																	
	04:15 PM				04:15 PM				04:15 PM				04:15 PM				
+0 mins.	0	0	0	0	0	**4**	**10**	**14**	0	0	1	1	**2**	7	0	9	
+15 mins.	0	0	0	0	0	2	9	11	**1**	0	**2**	**3**	2	**13**	0	**15**	
+30 mins.	0	0	0	0	0	1	9	10	1	0	0	1	1	8	0	9	
+45 mins.	0	0	0	0	0	4	1	5	0	0	0	0	0	3	0	3	
Total Volume	0	0	0	0	0	11	29	40	2	0	3	5	5	31	0	36	
% App. Total	0	0	0		0	27.5	72.5		40	0	60		13.9	86.1	0		
PHF	.000	.000	.000	.000	.000	.688	.725	.714	.500	.000	.375	.417	.625	.596	.000	.600	

Location: Perris
N/S: I-215 Northbound Ramps
E/W: Harley Knox Boulevard

Site Code: 051-15699
Date: 12/16/2015
Weather: Clear

PEDESTRIANS

	North Leg I-215 Northbound Ramps	East Leg Harley Knox Boulevard	South Leg I-215 Northbound Ramps	West Leg Harley Knox Boulevard	TOTAL
7:00 AM	0	0	0	0	0
7:15 AM	0	0	0	0	0
7:30 AM	0	0	0	0	0
7:45 AM	0	0	0	0	0
8:00 AM	0	0	0	0	0
8:15 AM	0	0	0	0	0
8:30 AM	0	0	0	0	0
8:45 AM	0	0	0	0	0
TOTAL VOLUMES:	0	0	0	0	0

	North Leg I-215 Northbound Ramps	East Leg Harley Knox Boulevard	South Leg I-215 Northbound Ramps	West Leg Harley Knox Boulevard	TOTAL
4:00 PM	0	0	0	0	0
4:15 PM	0	0	0	0	0
4:30 PM	0	0	0	0	0
4:45 PM	0	0	0	0	0
5:00 PM	0	0	0	0	0
5:15 PM	0	0	0	0	0
5:30 PM	0	0	0	0	0
5:45 PM	0	0	0	0	0
TOTAL VOLUMES:	0	0	0	0	0

Counts Unlimited, Inc.
PO Box 1178
Corona, CA 92878
951-268-6268

Location: Perris
N/S: I-215 Northbound Ramps
E/W: Harley Knox Boulevard

Site Code: 051-15699
Date: 12/16/2015
Weather: Clear

BICYCLES

	North Leg I-215 Northbound Ramps	East Leg Harley Knox Boulevard	South Leg I-215 Northbound Ramps	West Leg Harley Knox Boulevard	TOTAL
7:00 AM	0	0	0	0	0
7:15 AM	0	0	0	0	0
7:30 AM	0	0	0	0	0
7:45 AM	0	0	0	0	0
8:00 AM	0	0	0	0	0
8:15 AM	0	0	0	0	0
8:30 AM	0	0	0	0	0
8:45 AM	0	0	0	0	0
TOTAL VOLUMES:	0	0	0	0	0

	North Leg I-215 Northbound Ramps	East Leg Harley Knox Boulevard	South Leg I-215 Northbound Ramps	West Leg Harley Knox Boulevard	TOTAL
4:00 PM	0	0	0	0	0
4:15 PM	1	0	0	0	1
4:30 PM	0	0	0	0	0
4:45 PM	0	0	0	0	0
5:00 PM	0	0	0	0	0
5:15 PM	0	0	0	0	0
5:30 PM	0	0	0	0	0
5:45 PM	0	0	0	0	0
TOTAL VOLUMES:	1	0	0	0	1

Counts Unlimited, Inc.
PO Box 1178
Corona, CA 92878
951-268-6268

Counts Unlimited
PO Box 1178
Corona, CA 92878
(951) 268-6268

City of Perris
N/S: Western Way
E/W: Harley Knox Boulevard
Weather: Clear

File Name : PERWEHAAM
Site Code : 05115699
Start Date : 12/16/2015
Page No : 1

Groups Printed- Passenger Vehicles - Large 2 Axle Vehicles - 3 Axle Vehicles - 4+ Axle Trucks

	Western Way Southbound			Harley Knox Boulevard Westbound			Harley Knox Boulevard Eastbound			
Start Time	Left	Right	App. Total	Thru	Right	App. Total	Left	Thru	App. Total	Int. Total
07:00 AM	1	13	14	248	9	257	19	113	132	403
07:15 AM	0	10	10	157	1	158	12	106	118	286
07:30 AM	1	11	12	163	8	171	14	130	144	327
07:45 AM	0	11	11	127	7	134	12	145	157	302
Total	2	45	47	695	25	720	57	494	551	1318
08:00 AM	2	10	12	89	10	99	27	94	121	232
08:15 AM	6	14	20	92	8	100	13	66	79	199
08:30 AM	3	14	17	61	4	65	21	53	74	156
08:45 AM	4	12	16	60	6	66	11	63	74	156
Total	15	50	65	302	28	330	72	276	348	743
Grand Total	17	95	112	997	53	1050	129	770	899	2061
Apprch %	15.2	84.8		95	5		14.3	85.7		
Total %	0.8	4.6	5.4	48.4	2.6	50.9	6.3	37.4	43.6	
Passenger Vehicles	15	67	82	898	48	946	113	684	797	1825
% Passenger Vehicles	88.2	70.5	73.2	90.1	90.6	90.1	87.6	88.8	88.7	88.5
Large 2 Axle Vehicles	2	11	13	21	4	25	7	28	35	73
% Large 2 Axle Vehicles	11.8	11.6	11.6	2.1	7.5	2.4	5.4	3.6	3.9	3.5
3 Axle Vehicles	0	5	5	19	1	20	2	21	23	48
% 3 Axle Vehicles	0	5.3	4.5	1.9	1.9	1.9	1.6	2.7	2.6	2.3
4+ Axle Trucks	0	12	12	59	0	59	7	37	44	115
% 4+ Axle Trucks	0	12.6	10.7	5.9	0	5.6	5.4	4.8	4.9	5.6

	Western Way Southbound			Harley Knox Boulevard Westbound			Harley Knox Boulevard Eastbound			
Start Time	Left	Right	App. Total	Thru	Right	App. Total	Left	Thru	App. Total	Int. Total
Peak Hour Analysis From 07:00 AM to 08:45 AM - Peak 1 of 1										
Peak Hour for Entire Intersection Begins at 07:00 AM										
07:00 AM	**1**	**13**	**14**	**248**	**9**	**257**	**19**	113	132	**403**
07:15 AM	0	10	10	157	1	158	12	106	118	286
07:30 AM	1	11	12	163	8	171	14	130	144	327
07:45 AM	0	11	11	127	7	134	12	**145**	**157**	302
Total Volume	2	45	47	695	25	720	57	494	551	1318
% App. Total	4.3	95.7		96.5	3.5		10.3	89.7		
PHF	.500	.865	.839	.701	.694	.700	.750	.852	.877	.818

Counts Unlimited
PO Box 1178
Corona, CA 92878
(951) 268-6268

City of Perris
N/S: Western Way
E/W: Harley Knox Boulevard
Weather: Clear

File Name : PERWEHAAM
Site Code : 05115699
Start Date : 12/16/2015
Page No : 2

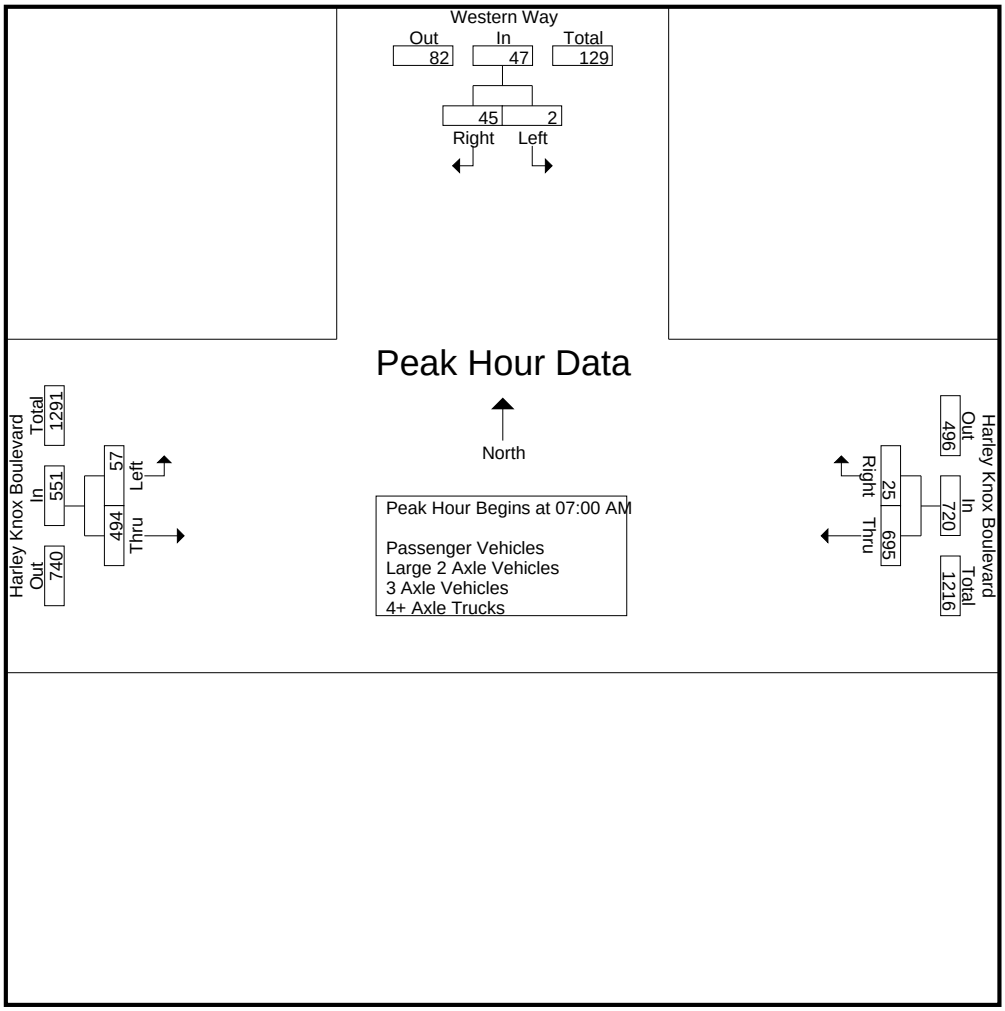

Peak Hour Analysis From 07:00 AM to 08:45 AM - Peak 1 of 1
Peak Hour for Each Approach Begins at:

	08:00 AM			07:00 AM			07:00 AM		
+0 mins.	2	10	12	**248**	**9**	**257**	**19**	113	132
+15 mins.	**6**	**14**	**20**	157	1	158	12	106	118
+30 mins.	3	14	17	163	8	171	14	130	144
+45 mins.	4	12	16	127	7	134	12	**145**	**157**
Total Volume	15	50	65	695	25	720	57	494	551
% App. Total	23.1	76.9		96.5	3.5		10.3	89.7	
PHF	.625	.893	.813	.701	.694	.700	.750	.852	.877

Counts Unlimited
PO Box 1178
Corona, CA 92878
(951) 268-6268

City of Perris
N/S: Western Way
E/W: Harley Knox Boulevard
Weather: Clear

File Name : PERWEHAAM
Site Code : 05115699
Start Date : 12/16/2015
Page No : 1

Groups Printed- Passenger Vehicles

	Western Way Southbound			Harley Knox Boulevard Westbound			Harley Knox Boulevard Eastbound			
Start Time	Left	Right	App. Total	Thru	Right	App. Total	Left	Thru	App. Total	Int. Total
07:00 AM	1	8	9	238	8	246	17	103	120	375
07:15 AM	0	6	6	152	1	153	11	91	102	261
07:30 AM	1	9	10	144	8	152	11	123	134	296
07:45 AM	0	5	5	117	6	123	11	133	144	272
Total	2	28	30	651	23	674	50	450	500	1204
08:00 AM	2	9	11	76	8	84	24	84	108	203
08:15 AM	5	11	16	75	8	83	12	59	71	170
08:30 AM	2	11	13	47	4	51	17	44	61	125
08:45 AM	4	8	12	49	5	54	10	47	57	123
Total	13	39	52	247	25	272	63	234	297	621
Grand Total	15	67	82	898	48	946	113	684	797	1825
Apprch %	18.3	81.7		94.9	5.1		14.2	85.8		
Total %	0.8	3.7	4.5	49.2	2.6	51.8	6.2	37.5	43.7	

	Western Way Southbound			Harley Knox Boulevard Westbound			Harley Knox Boulevard Eastbound			
Start Time	Left	Right	App. Total	Thru	Right	App. Total	Left	Thru	App. Total	Int. Total
Peak Hour Analysis From 07:00 AM to 07:45 AM - Peak 1 of 1										
Peak Hour for Entire Intersection Begins at 07:00 AM										
07:00 AM	**1**	8	9	**238**	**8**	**246**	**17**	103	120	**375**
07:15 AM	0	6	6	152	1	153	11	91	102	261
07:30 AM	1	**9**	**10**	144	8	152	11	123	134	296
07:45 AM	0	5	5	117	6	123	11	**133**	**144**	272
Total Volume	2	28	30	651	23	674	50	450	500	1204
% App. Total	6.7	93.3		96.6	3.4		10	90		
PHF	.500	.778	.750	.684	.719	.685	.735	.846	.868	.803

Counts Unlimited
PO Box 1178
Corona, CA 92878
(951) 268-6268

City of Perris
N/S: Western Way
E/W: Harley Knox Boulevard
Weather: Clear

File Name : PERWEHAAM
Site Code : 05115699
Start Date : 12/16/2015
Page No : 2

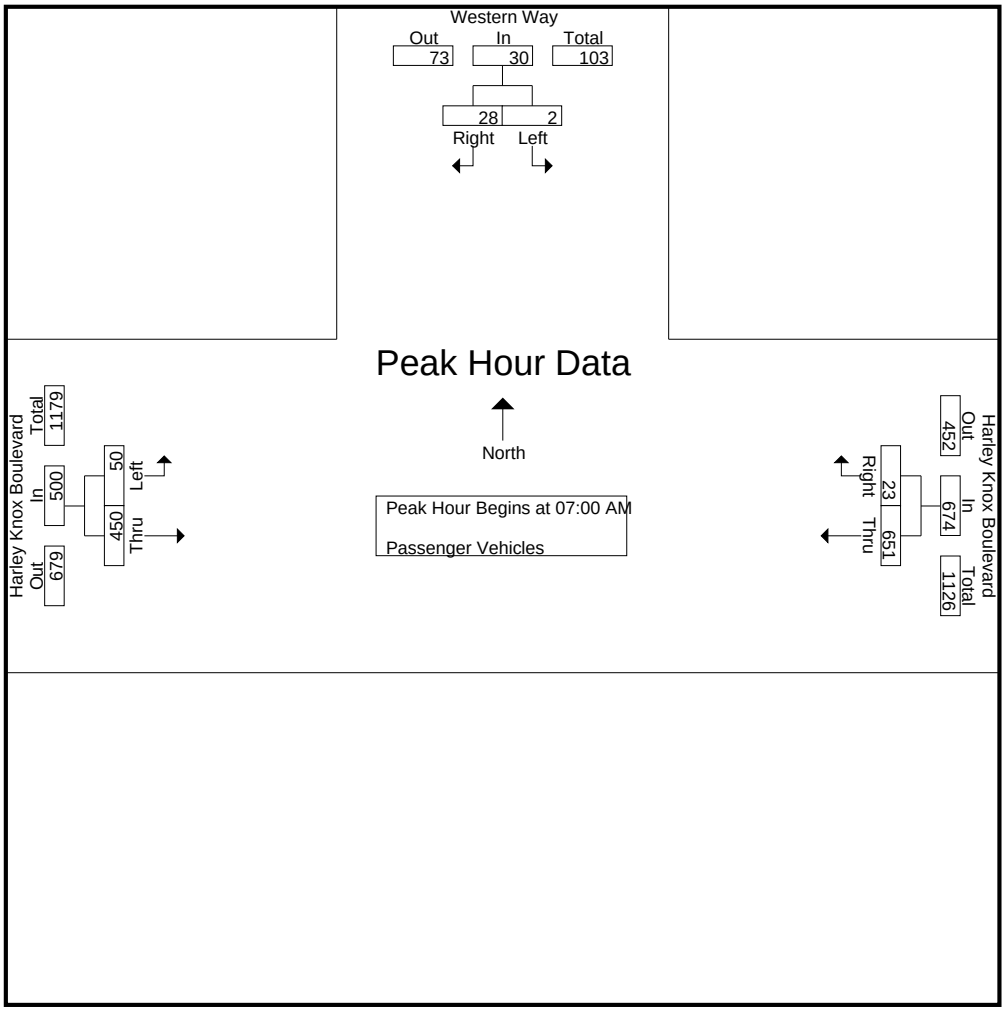

Peak Hour Analysis From 07:00 AM to 07:45 AM - Peak 1 of 1
Peak Hour for Each Approach Begins at:

	07:00 AM			07:00 AM			07:00 AM		
+0 mins.	**1**	8	9	**238**	**8**	**246**	**17**	103	120
+15 mins.	0	6	6	152	1	153	11	91	102
+30 mins.	1	**9**	**10**	144	8	152	11	123	134
+45 mins.	0	5	5	117	6	123	11	**133**	**144**
Total Volume	2	28	30	651	23	674	50	450	500
% App. Total	6.7	93.3		96.6	3.4		10	90	
PHF	.500	.778	.750	.684	.719	.685	.735	.846	.868

Counts Unlimited
PO Box 1178
Corona, CA 92878
(951) 268-6268

City of Perris
N/S: Western Way
E/W: Harley Knox Boulevard
Weather: Clear

File Name : PERWEHAAM
Site Code : 05115699
Start Date : 12/16/2015
Page No : 1

Groups Printed- Large 2 Axle Vehicles

	Western Way Southbound			Harley Knox Boulevard Westbound			Harley Knox Boulevard Eastbound			
Start Time	Left	Right	App. Total	Thru	Right	App. Total	Left	Thru	App. Total	Int. Total
07:00 AM	0	2	2	2	1	3	1	2	3	8
07:15 AM	0	1	1	1	0	1	0	8	8	10
07:30 AM	0	1	1	2	0	2	0	3	3	6
07:45 AM	0	2	2	2	1	3	0	3	3	8
Total	0	6	6	7	2	9	1	16	17	32
08:00 AM	0	0	0	2	2	4	1	2	3	7
08:15 AM	1	2	3	4	0	4	1	3	4	11
08:30 AM	1	1	2	5	0	5	3	1	4	11
08:45 AM	0	2	2	3	0	3	1	6	7	12
Total	2	5	7	14	2	16	6	12	18	41
Grand Total	2	11	13	21	4	25	7	28	35	73
Apprch %	15.4	84.6		84	16		20	80		
Total %	2.7	15.1	17.8	28.8	5.5	34.2	9.6	38.4	47.9	

	Western Way Southbound			Harley Knox Boulevard Westbound			Harley Knox Boulevard Eastbound			
Start Time	Left	Right	App. Total	Thru	Right	App. Total	Left	Thru	App. Total	Int. Total
Peak Hour Analysis From 07:00 AM to 07:45 AM - Peak 1 of 1										
Peak Hour for Entire Intersection Begins at 07:00 AM										
07:00 AM	0	**2**	**2**	**2**	**1**	**3**	**1**	2	3	8
07:15 AM	0	1	1	1	0	1	0	**8**	**8**	**10**
07:30 AM	0	1	1	2	0	2	0	3	3	6
07:45 AM	0	2	2	2	1	3	0	3	3	8
Total Volume	0	6	6	7	2	9	1	16	17	32
% App. Total	0	100		77.8	22.2		5.9	94.1		
PHF	.000	.750	.750	.875	.500	.750	.250	.500	.531	.800

Counts Unlimited
PO Box 1178
Corona, CA 92878
(951) 268-6268

City of Perris
N/S: Western Way
E/W: Harley Knox Boulevard
Weather: Clear

File Name : PERWEHAAM
Site Code : 05115699
Start Date : 12/16/2015
Page No : 2

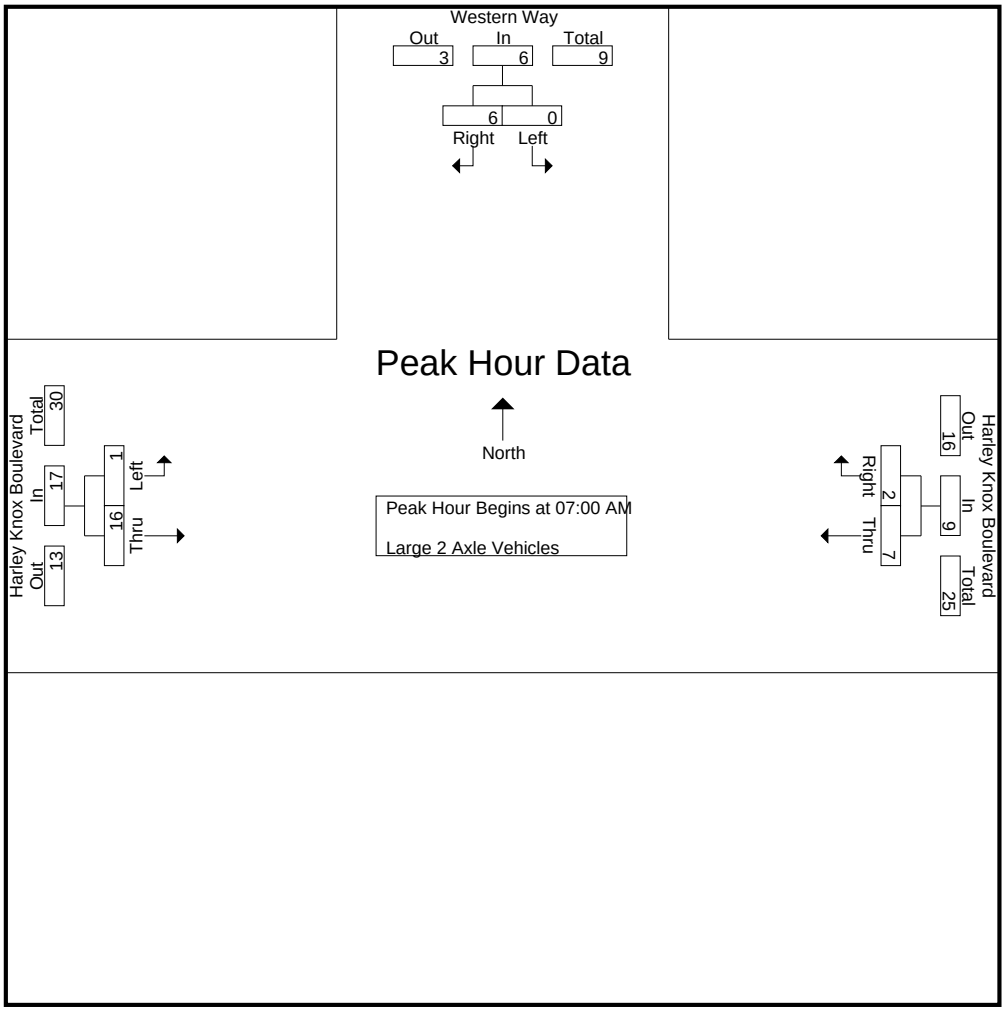

Peak Hour Analysis From 07:00 AM to 07:45 AM - Peak 1 of 1
Peak Hour for Each Approach Begins at:

	07:00 AM			07:00 AM			07:00 AM		
+0 mins.	0	**2**	**2**	**2**	**1**	**3**	**1**	2	3
+15 mins.	0	1	1	1	0	1	0	**8**	**8**
+30 mins.	0	1	1	2	0	2	0	3	3
+45 mins.	0	2	2	2	1	3	0	3	3
Total Volume	0	6	6	7	2	9	1	16	17
% App. Total	0	100		77.8	22.2		5.9	94.1	
PHF	.000	.750	.750	.875	.500	.750	.250	.500	.531

Counts Unlimited
PO Box 1178
Corona, CA 92878
(951) 268-6268

City of Perris
N/S: Western Way
E/W: Harley Knox Boulevard
Weather: Clear

File Name : PERWEHAAM
Site Code : 05115699
Start Date : 12/16/2015
Page No : 1

Groups Printed- 3 Axle Vehicles

	Western Way Southbound			Harley Knox Boulevard Westbound			Harley Knox Boulevard Eastbound			
Start Time	Left	Right	App. Total	Thru	Right	App. Total	Left	Thru	App. Total	Int. Total
07:00 AM	0	0	0	2	0	2	1	3	4	6
07:15 AM	0	1	1	1	0	1	0	0	0	2
07:30 AM	0	0	0	4	0	4	1	2	3	7
07:45 AM	0	1	1	2	0	2	0	4	4	7
Total	0	2	2	9	0	9	2	9	11	22
08:00 AM	0	0	0	1	0	1	0	2	2	3
08:15 AM	0	0	0	3	0	3	0	2	2	5
08:30 AM	0	1	1	3	0	3	0	2	2	6
08:45 AM	0	2	2	3	1	4	0	6	6	12
Total	0	3	3	10	1	11	0	12	12	26
Grand Total	0	5	5	19	1	20	2	21	23	48
Apprch %	0	100		95	5		8.7	91.3		
Total %	0	10.4	10.4	39.6	2.1	41.7	4.2	43.8	47.9	

	Western Way Southbound			Harley Knox Boulevard Westbound			Harley Knox Boulevard Eastbound			
Start Time	Left	Right	App. Total	Thru	Right	App. Total	Left	Thru	App. Total	Int. Total
Peak Hour Analysis From 07:00 AM to 07:45 AM - Peak 1 of 1										
Peak Hour for Entire Intersection Begins at 07:00 AM										
07:00 AM	0	0	0	2	0	2	**1**	3	**4**	6
07:15 AM	0	**1**	**1**	1	0	1	0	0	0	2
07:30 AM	0	0	0	**4**	0	**4**	1	2	3	**7**
07:45 AM	0	1	1	2	0	2	0	**4**	4	7
Total Volume	0	2	2	9	0	9	2	9	11	22
% App. Total	0	100		100	0		18.2	81.8		
PHF	.000	.500	.500	.563	.000	.563	.500	.563	.688	.786

Counts Unlimited
PO Box 1178
Corona, CA 92878
(951) 268-6268

City of Perris
N/S: Western Way
E/W: Harley Knox Boulevard
Weather: Clear

File Name : PERWEHAAM
Site Code : 05115699
Start Date : 12/16/2015
Page No : 2

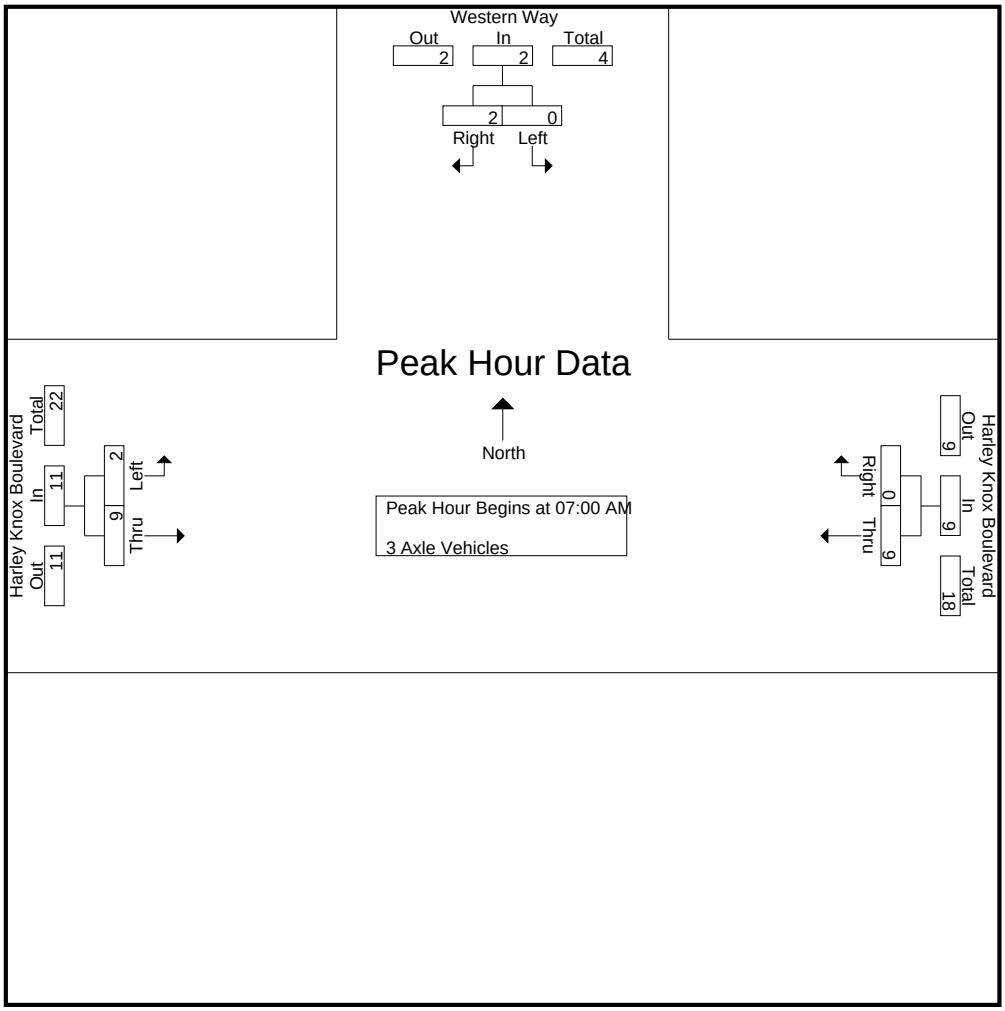

Peak Hour Analysis From 07:00 AM to 07:45 AM - Peak 1 of 1
Peak Hour for Each Approach Begins at:

	07:00 AM			07:00 AM			07:00 AM		
+0 mins.	0	0	0	2	0	2	**1**	3	**4**
+15 mins.	0	**1**	**1**	1	0	1	0	0	0
+30 mins.	0	0	0	**4**	0	**4**	1	2	3
+45 mins.	0	1	1	2	0	2	0	**4**	4
Total Volume	0	2	2	9	0	9	2	9	11
% App. Total	0	100		100	0		18.2	81.8	
PHF	.000	.500	.500	.563	.000	.563	.500	.563	.688

Counts Unlimited
PO Box 1178
Corona, CA 92878
(951) 268-6268

City of Perris
N/S: Western Way
E/W: Harley Knox Boulevard
Weather: Clear

File Name : PERWEHAAM
Site Code : 05115699
Start Date : 12/16/2015
Page No : 1

Groups Printed- 4+ Axle Trucks

	Western Way Southbound			Harley Knox Boulevard Westbound			Harley Knox Boulevard Eastbound			
Start Time	Left	Right	App. Total	Thru	Right	App. Total	Left	Thru	App. Total	Int. Total
07:00 AM	0	3	3	6	0	6	0	5	5	14
07:15 AM	0	2	2	3	0	3	1	7	8	13
07:30 AM	0	1	1	13	0	13	2	2	4	18
07:45 AM	0	3	3	6	0	6	1	5	6	15
Total	0	9	9	28	0	28	4	19	23	60
08:00 AM	0	1	1	10	0	10	2	6	8	19
08:15 AM	0	1	1	10	0	10	0	2	2	13
08:30 AM	0	1	1	6	0	6	1	6	7	14
08:45 AM	0	0	0	5	0	5	0	4	4	9
Total	0	3	3	31	0	31	3	18	21	55
Grand Total	0	12	12	59	0	59	7	37	44	115
Apprch %	0	100		100	0		15.9	84.1		
Total %	0	10.4	10.4	51.3	0	51.3	6.1	32.2	38.3	

	Western Way Southbound			Harley Knox Boulevard Westbound			Harley Knox Boulevard Eastbound			
Start Time	Left	Right	App. Total	Thru	Right	App. Total	Left	Thru	App. Total	Int. Total
Peak Hour Analysis From 07:00 AM to 07:45 AM - Peak 1 of 1										
Peak Hour for Entire Intersection Begins at 07:00 AM										
07:00 AM	0	**3**	**3**	6	0	6	0	5	5	14
07:15 AM	0	2	2	3	0	3	1	**7**	**8**	13
07:30 AM	0	1	1	**13**	0	**13**	**2**	2	4	**18**
07:45 AM	0	3	3	6	0	6	1	5	6	15
Total Volume	0	9	9	28	0	28	4	19	23	60
% App. Total	0	100		100	0		17.4	82.6		
PHF	.000	.750	.750	.538	.000	.538	.500	.679	.719	.833

Counts Unlimited
PO Box 1178
Corona, CA 92878
(951) 268-6268

City of Perris
N/S: Western Way
E/W: Harley Knox Boulevard
Weather: Clear

File Name : PERWEHAAM
Site Code : 05115699
Start Date : 12/16/2015
Page No : 2

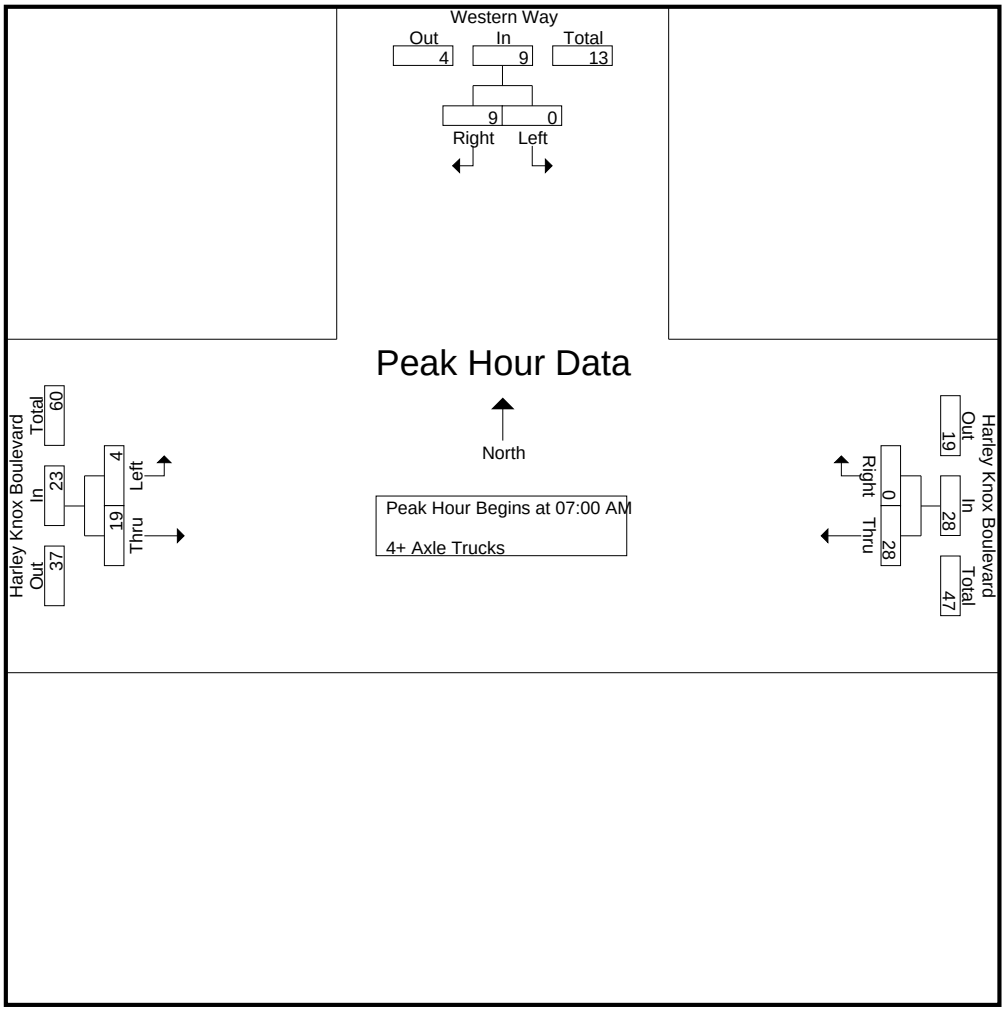

Peak Hour Analysis From 07:00 AM to 07:45 AM - Peak 1 of 1
Peak Hour for Each Approach Begins at:

	07:00 AM			07:00 AM			07:00 AM		
+0 mins.	0	**3**	**3**	6	0	6	0	5	5
+15 mins.	0	2	2	3	0	3	1	**7**	**8**
+30 mins.	0	1	1	**13**	0	**13**	**2**	2	4
+45 mins.	0	3	3	6	0	6	1	5	6
Total Volume	0	9	9	28	0	28	4	19	23
% App. Total	0	100		100	0		17.4	82.6	
PHF	.000	.750	.750	.538	.000	.538	.500	.679	.719

Counts Unlimited
PO Box 1178
Corona, CA 92878
(951) 268-6268

City of Perris
N/S: Western Way
E/W: Harley Knox Boulevard
Weather: Clear

File Name : PERWEHAPM
Site Code : 05115699
Start Date : 12/16/2015
Page No : 1

Groups Printed- Passenger Vehicles - Large 2 Axle Vehicles - 3 Axle Vehicles - 4+ Axle Trucks

	Western Way Southbound			Harley Knox Boulevard Westbound			Harley Knox Boulevard Eastbound			
Start Time	Left	Right	App. Total	Thru	Right	App. Total	Left	Thru	App. Total	Int. Total
04:00 PM	6	18	24	133	2	135	2	114	116	275
04:15 PM	7	22	29	100	2	102	6	141	147	278
04:30 PM	1	24	25	177	0	177	5	163	168	370
04:45 PM	4	20	24	206	1	207	1	134	135	366
Total	18	84	102	616	5	621	14	552	566	1289
05:00 PM	2	17	19	150	3	153	4	110	114	286
05:15 PM	3	18	21	85	1	86	0	106	106	213
05:30 PM	1	14	15	132	1	133	1	159	160	308
05:45 PM	1	13	14	141	0	141	0	170	170	325
Total	7	62	69	508	5	513	5	545	550	1132
Grand Total	25	146	171	1124	10	1134	19	1097	1116	2421
Apprch %	14.6	85.4		99.1	0.9		1.7	98.3		
Total %	1	6	7.1	46.4	0.4	46.8	0.8	45.3	46.1	
Passenger Vehicles	25	142	167	1038	10	1048	12	1023	1035	2250
% Passenger Vehicles	100	97.3	97.7	92.3	100	92.4	63.2	93.3	92.7	92.9
Large 2 Axle Vehicles	0	3	3	14	0	14	4	11	15	32
% Large 2 Axle Vehicles	0	2.1	1.8	1.2	0	1.2	21.1	1	1.3	1.3
3 Axle Vehicles	0	0	0	12	0	12	1	29	30	42
% 3 Axle Vehicles	0	0	0	1.1	0	1.1	5.3	2.6	2.7	1.7
4+ Axle Trucks	0	1	1	60	0	60	2	34	36	97
% 4+ Axle Trucks	0	0.7	0.6	5.3	0	5.3	10.5	3.1	3.2	4

	Western Way Southbound			Harley Knox Boulevard Westbound			Harley Knox Boulevard Eastbound			
Start Time	Left	Right	App. Total	Thru	Right	App. Total	Left	Thru	App. Total	Int. Total
Peak Hour Analysis From 04:00 PM to 05:45 PM - Peak 1 of 1										
Peak Hour for Entire Intersection Begins at 04:15 PM										
04:15 PM	**7**	22	**29**	100	2	102	**6**	141	147	278
04:30 PM	1	**24**	25	177	0	177	5	**163**	**168**	**370**
04:45 PM	4	20	24	**206**	1	**207**	1	134	135	366
05:00 PM	2	17	19	150	**3**	153	4	110	114	286
Total Volume	14	83	97	633	6	639	16	548	564	1300
% App. Total	14.4	85.6		99.1	0.9		2.8	97.2		
PHF	.500	.865	.836	.768	.500	.772	.667	.840	.839	.878

Counts Unlimited
PO Box 1178
Corona, CA 92878
(951) 268-6268

City of Perris
N/S: Western Way
E/W: Harley Knox Boulevard
Weather: Clear

File Name : PERWEHAPM
Site Code : 05115699
Start Date : 12/16/2015
Page No : 2

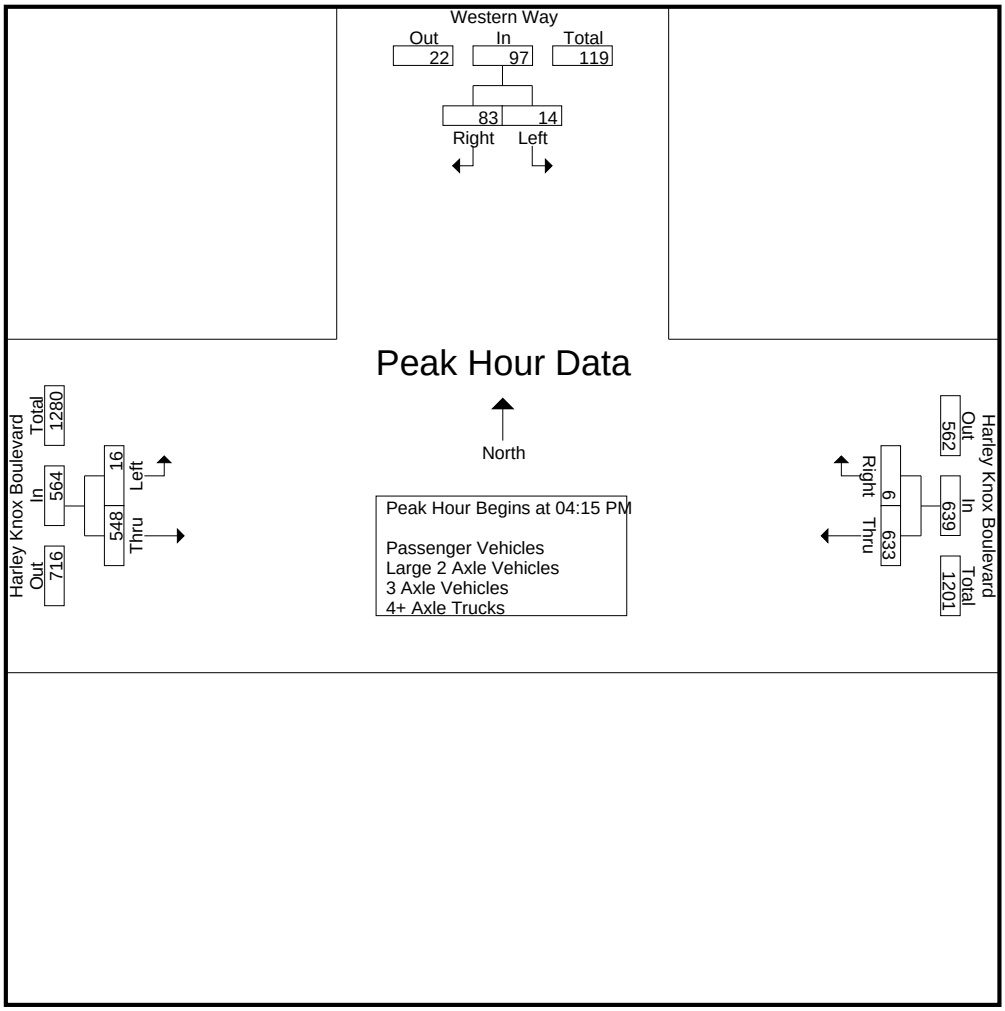

Peak Hour Analysis From 04:00 PM to 05:45 PM - Peak 1 of 1
Peak Hour for Each Approach Begins at:

	04:00 PM			04:15 PM			04:00 PM		
+0 mins.	6	18	24	100	2	102	2	114	116
+15 mins.	**7**	22	**29**	177	0	177	**6**	141	147
+30 mins.	1	**24**	25	**206**	1	**207**	5	**163**	**168**
+45 mins.	4	20	24	150	**3**	153	1	134	135
Total Volume	18	84	102	633	6	639	14	552	566
% App. Total	17.6	82.4		99.1	0.9		2.5	97.5	
PHF	.643	.875	.879	.768	.500	.772	.583	.847	.842

Counts Unlimited
PO Box 1178
Corona, CA 92878
(951) 268-6268

City of Perris
N/S: Western Way
E/W: Harley Knox Boulevard
Weather: Clear

File Name : PERWEHAPM
Site Code : 05115699
Start Date : 12/16/2015
Page No : 1

Groups Printed- Passenger Vehicles

	Western Way Southbound			Harley Knox Boulevard Westbound			Harley Knox Boulevard Eastbound			
Start Time	Left	Right	App. Total	Thru	Right	App. Total	Left	Thru	App. Total	Int. Total
04:00 PM	6	18	24	124	2	126	0	106	106	256
04:15 PM	7	20	27	84	2	86	5	132	137	250
04:30 PM	1	23	24	160	0	160	3	149	152	336
04:45 PM	4	20	24	193	1	194	0	120	120	338
Total	18	81	99	561	5	566	8	507	515	1180
05:00 PM	2	17	19	137	3	140	3	98	101	260
05:15 PM	3	18	21	80	1	81	0	97	97	199
05:30 PM	1	14	15	128	1	129	1	155	156	300
05:45 PM	1	12	13	132	0	132	0	166	166	311
Total	7	61	68	477	5	482	4	516	520	1070
Grand Total	25	142	167	1038	10	1048	12	1023	1035	2250
Apprch %	15	85		99	1		1.2	98.8		
Total %	1.1	6.3	7.4	46.1	0.4	46.6	0.5	45.5	46	

	Western Way Southbound			Harley Knox Boulevard Westbound			Harley Knox Boulevard Eastbound			
Start Time	Left	Right	App. Total	Thru	Right	App. Total	Left	Thru	App. Total	Int. Total
Peak Hour Analysis From 04:15 PM to 05:00 PM - Peak 1 of 1										
Peak Hour for Entire Intersection Begins at 04:15 PM										
04:15 PM	**7**	20	**27**	84	2	86	**5**	132	137	250
04:30 PM	1	**23**	24	160	0	160	3	**149**	**152**	336
04:45 PM	4	20	24	**193**	1	**194**	0	120	120	**338**
05:00 PM	2	17	19	137	**3**	140	3	98	101	260
Total Volume	14	80	94	574	6	580	11	499	510	1184
% App. Total	14.9	85.1		99	1		2.2	97.8		
PHF	.500	.870	.870	.744	.500	.747	.550	.837	.839	.876

Counts Unlimited
PO Box 1178
Corona, CA 92878
(951) 268-6268

City of Perris
N/S: Western Way
E/W: Harley Knox Boulevard
Weather: Clear

File Name : PERWEHAPM
Site Code : 05115699
Start Date : 12/16/2015
Page No : 2

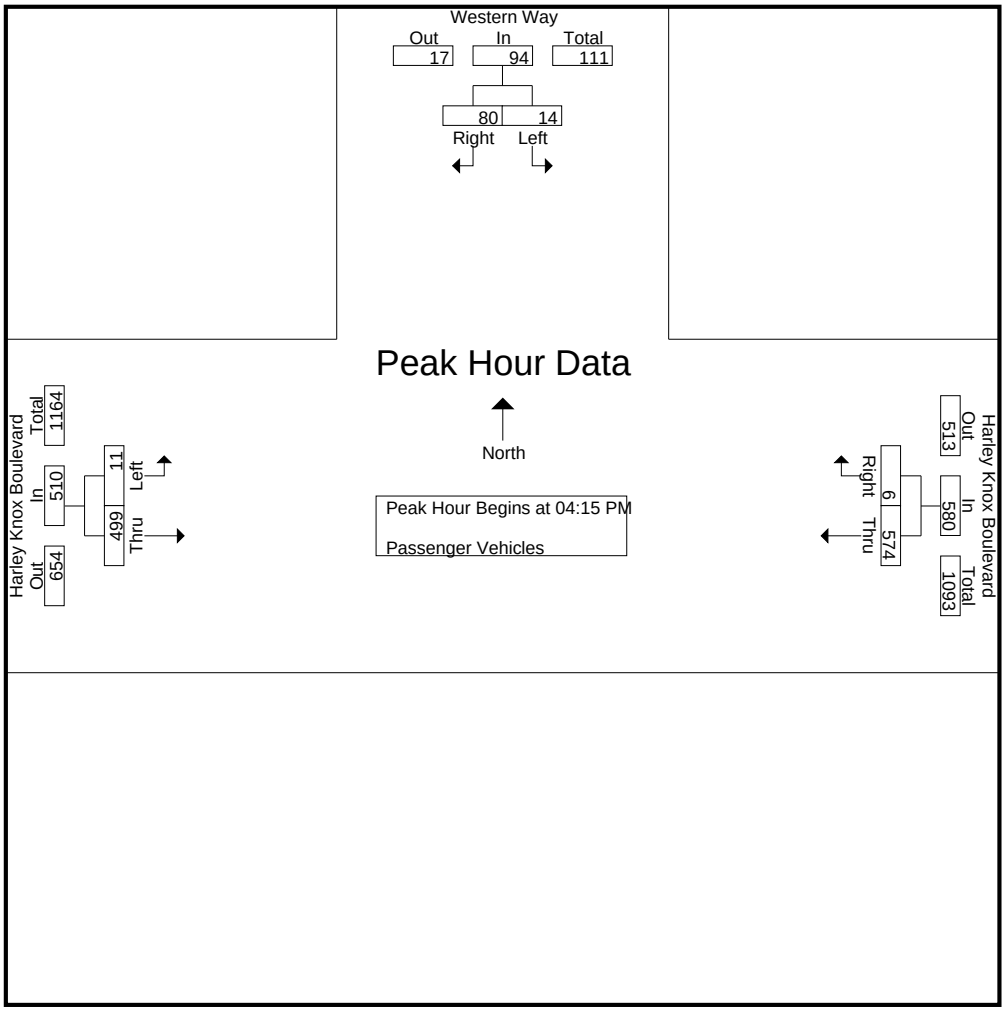

Peak Hour Analysis From 04:15 PM to 05:00 PM - Peak 1 of 1
Peak Hour for Each Approach Begins at:

	04:15 PM			04:15 PM			04:15 PM		
+0 mins.	**7**	20	**27**	84	2	86	**5**	132	137
+15 mins.	1	**23**	24	160	0	160	3	**149**	**152**
+30 mins.	4	20	24	**193**	1	**194**	0	120	120
+45 mins.	2	17	19	137	**3**	140	3	98	101
Total Volume	14	80	94	574	6	580	11	499	510
% App. Total	14.9	85.1		99	1		2.2	97.8	
PHF	.500	.870	.870	.744	.500	.747	.550	.837	.839

Counts Unlimited
PO Box 1178
Corona, CA 92878
(951) 268-6268

City of Perris
N/S: Western Way
E/W: Harley Knox Boulevard
Weather: Clear

File Name : PERWEHAPM
Site Code : 05115699
Start Date : 12/16/2015
Page No : 1

Groups Printed- Large 2 Axle Vehicles

	Western Way Southbound			Harley Knox Boulevard Westbound			Harley Knox Boulevard Eastbound			
Start Time	Left	Right	App. Total	Thru	Right	App. Total	Left	Thru	App. Total	Int. Total
04:00 PM	0	0	0	2	0	2	0	4	4	6
04:15 PM	0	2	2	1	0	1	1	2	3	6
04:30 PM	0	1	1	2	0	2	1	2	3	6
04:45 PM	0	0	0	5	0	5	1	0	1	6
Total	0	3	3	10	0	10	3	8	11	24
05:00 PM	0	0	0	2	0	2	1	0	1	3
05:15 PM	0	0	0	1	0	1	0	1	1	2
05:30 PM	0	0	0	1	0	1	0	1	1	2
05:45 PM	0	0	0	0	0	0	0	1	1	1
Total	0	0	0	4	0	4	1	3	4	8
Grand Total	0	3	3	14	0	14	4	11	15	32
Apprch %	0	100		100	0		26.7	73.3		
Total %	0	9.4	9.4	43.8	0	43.8	12.5	34.4	46.9	

	Western Way Southbound			Harley Knox Boulevard Westbound			Harley Knox Boulevard Eastbound			
Start Time	Left	Right	App. Total	Thru	Right	App. Total	Left	Thru	App. Total	Int. Total
Peak Hour Analysis From 04:15 PM to 05:00 PM - Peak 1 of 1										
Peak Hour for Entire Intersection Begins at 04:15 PM										
04:15 PM	0	**2**	**2**	1	0	1	**1**	**2**	**3**	**6**
04:30 PM	0	1	1	2	0	2	1	2	3	6
04:45 PM	0	0	0	**5**	0	**5**	1	0	1	6
05:00 PM	0	0	0	2	0	2	1	0	1	3
Total Volume	0	3	3	10	0	10	4	4	8	21
% App. Total	0	100		100	0		50	50		
PHF	.000	.375	.375	.500	.000	.500	1.00	.500	.667	.875

Counts Unlimited
PO Box 1178
Corona, CA 92878
(951) 268-6268

City of Perris
N/S: Western Way
E/W: Harley Knox Boulevard
Weather: Clear

File Name : PERWEHAPM
Site Code : 05115699
Start Date : 12/16/2015
Page No : 2

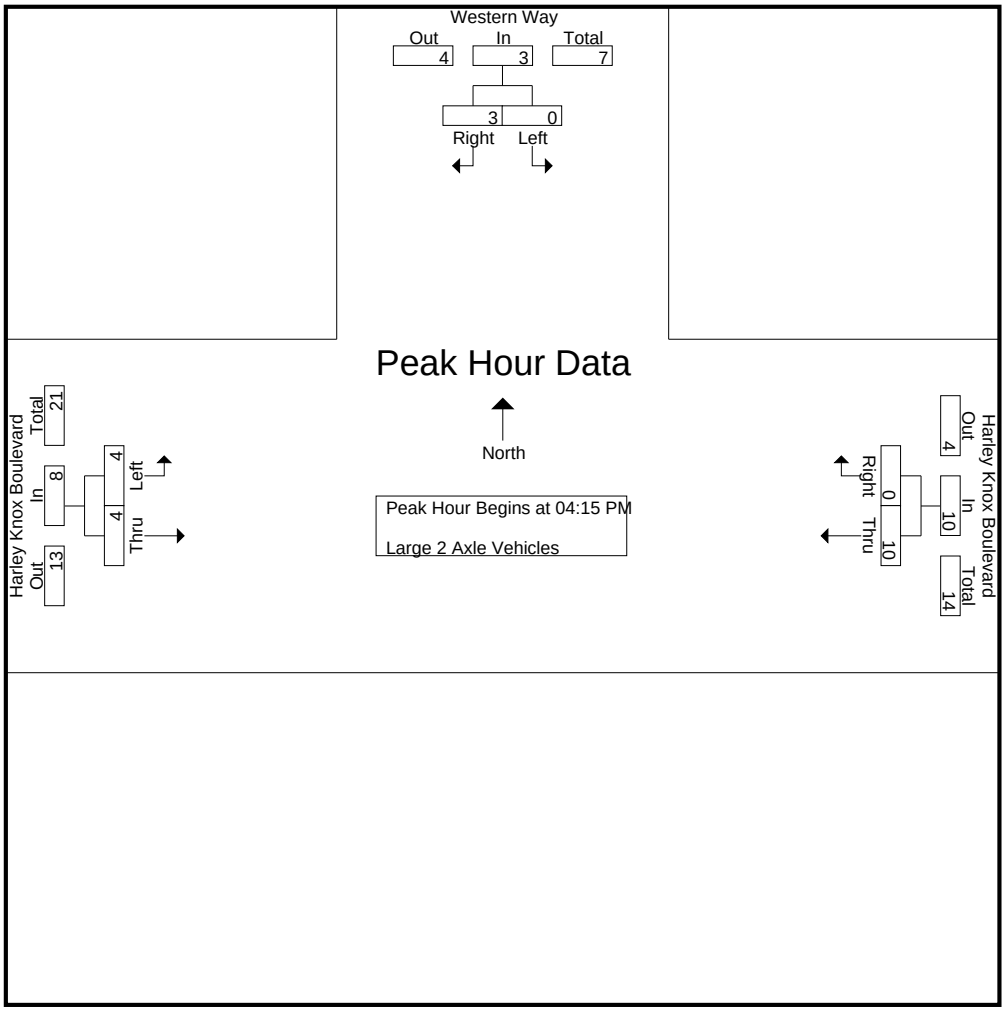

Peak Hour Analysis From 04:15 PM to 05:00 PM - Peak 1 of 1
Peak Hour for Each Approach Begins at:

	04:15 PM			04:15 PM			04:15 PM		
+0 mins.	0	**2**	**2**	1	0	1	**1**	**2**	**3**
+15 mins.	0	1	1	2	0	2	1	2	3
+30 mins.	0	0	0	**5**	0	**5**	1	0	1
+45 mins.	0	0	0	2	0	2	1	0	1
Total Volume	0	3	3	10	0	10	4	4	8
% App. Total	0	100		100	0		50	50	
PHF	.000	.375	.375	.500	.000	.500	1.000	.500	.667

Counts Unlimited
PO Box 1178
Corona, CA 92878
(951) 268-6268

City of Perris
N/S: Western Way
E/W: Harley Knox Boulevard
Weather: Clear

File Name : PERWEHAPM
Site Code : 05115699
Start Date : 12/16/2015
Page No : 1

Groups Printed- 3 Axle Vehicles

	Western Way Southbound			Harley Knox Boulevard Westbound			Harley Knox Boulevard Eastbound			
Start Time	Left	Right	App. Total	Thru	Right	App. Total	Left	Thru	App. Total	Int. Total
04:00 PM	0	0	0	1	0	1	1	3	4	5
04:15 PM	0	0	0	2	0	2	0	2	2	4
04:30 PM	0	0	0	2	0	2	0	7	7	9
04:45 PM	0	0	0	1	0	1	0	5	5	6
Total	0	0	0	6	0	6	1	17	18	24
05:00 PM	0	0	0	4	0	4	0	6	6	10
05:15 PM	0	0	0	0	0	0	0	5	5	5
05:30 PM	0	0	0	0	0	0	0	0	0	0
05:45 PM	0	0	0	2	0	2	0	1	1	3
Total	0	0	0	6	0	6	0	12	12	18
Grand Total	0	0	0	12	0	12	1	29	30	42
Apprch %	0	0		100	0		3.3	96.7		
Total %	0	0	0	28.6	0	28.6	2.4	69	71.4	

	Western Way Southbound			Harley Knox Boulevard Westbound			Harley Knox Boulevard Eastbound			
Start Time	Left	Right	App. Total	Thru	Right	App. Total	Left	Thru	App. Total	Int. Total
Peak Hour Analysis From 04:15 PM to 05:00 PM - Peak 1 of 1										
Peak Hour for Entire Intersection Begins at 04:15 PM										
04:15 PM	0	0	0	2	0	2	0	2	2	4
04:30 PM	0	0	0	2	0	2	0	**7**	**7**	9
04:45 PM	0	0	0	1	0	1	0	5	5	6
05:00 PM	0	0	0	**4**	0	**4**	0	6	6	**10**
Total Volume	0	0	0	9	0	9	0	20	20	29
% App. Total	0	0		100	0		0	100		
PHF	.000	.000	.000	.563	.000	.563	.000	.714	.714	.725

Counts Unlimited
PO Box 1178
Corona, CA 92878
(951) 268-6268

City of Perris
N/S: Western Way
E/W: Harley Knox Boulevard
Weather: Clear

File Name : PERWEHAPM
Site Code : 05115699
Start Date : 12/16/2015
Page No : 2

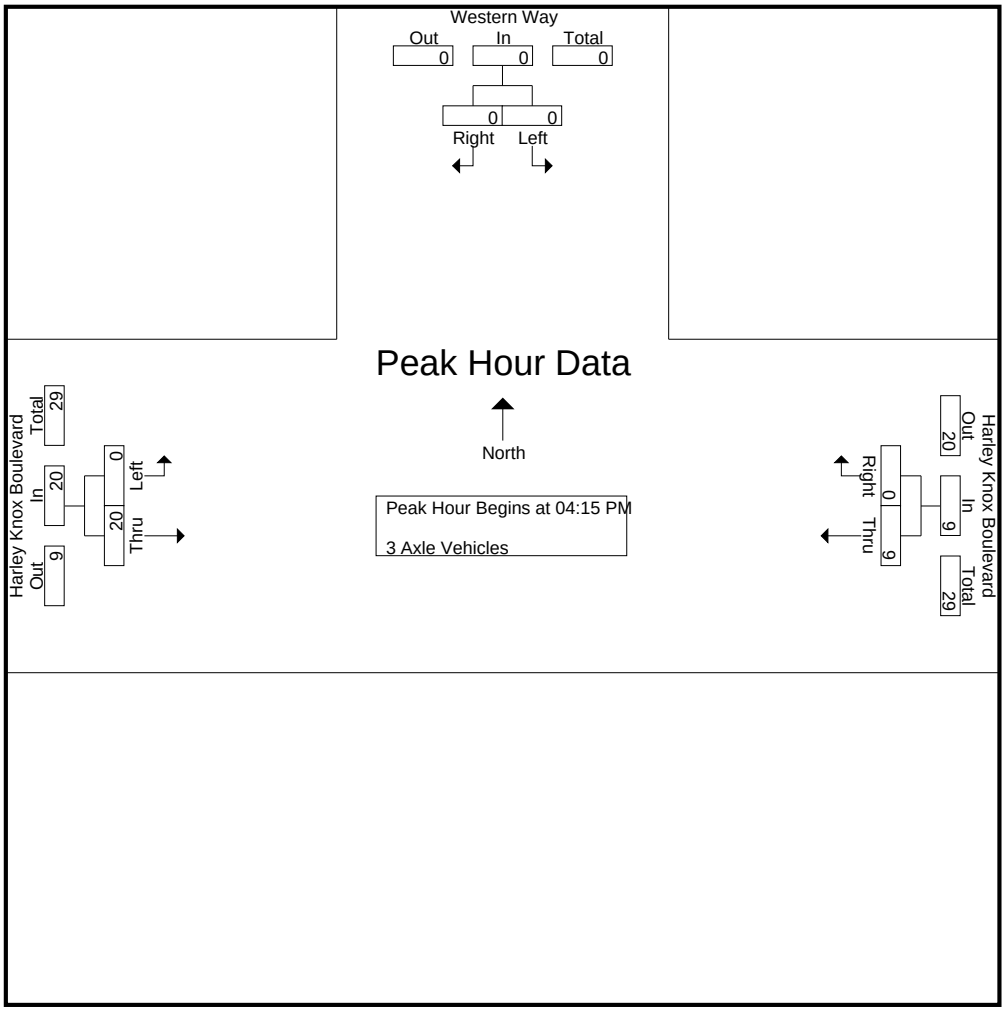

Peak Hour Analysis From 04:15 PM to 05:00 PM - Peak 1 of 1
Peak Hour for Each Approach Begins at:

	04:15 PM			04:15 PM			04:15 PM		
+0 mins.	0	0	0	2	0	2	0	2	2
+15 mins.	0	0	0	2	0	2	0	**7**	**7**
+30 mins.	0	0	0	1	0	1	0	5	5
+45 mins.	0	0	0	**4**	0	**4**	0	6	6
Total Volume	0	0	0	9	0	9	0	20	20
% App. Total	0	0		100	0		0	100	
PHF	.000	.000	.000	.563	.000	.563	.000	.714	.714

Counts Unlimited
PO Box 1178
Corona, CA 92878
(951) 268-6268

City of Perris
N/S: Western Way
E/W: Harley Knox Boulevard
Weather: Clear

File Name : PERWEHAPM
Site Code : 05115699
Start Date : 12/16/2015
Page No : 1

Groups Printed- 4+ Axle Trucks

	Western Way Southbound			Harley Knox Boulevard Westbound			Harley Knox Boulevard Eastbound			
Start Time	Left	Right	App. Total	Thru	Right	App. Total	Left	Thru	App. Total	Int. Total
04:00 PM	0	0	0	6	0	6	1	1	2	8
04:15 PM	0	0	0	13	0	13	0	5	5	18
04:30 PM	0	0	0	13	0	13	1	5	6	19
04:45 PM	0	0	0	7	0	7	0	9	9	16
Total	0	0	0	39	0	39	2	20	22	61
05:00 PM	0	0	0	7	0	7	0	6	6	13
05:15 PM	0	0	0	4	0	4	0	3	3	7
05:30 PM	0	0	0	3	0	3	0	3	3	6
05:45 PM	0	1	1	7	0	7	0	2	2	10
Total	0	1	1	21	0	21	0	14	14	36
Grand Total	0	1	1	60	0	60	2	34	36	97
Apprch %	0	100		100	0		5.6	94.4		
Total %	0	1	1	61.9	0	61.9	2.1	35.1	37.1	

	Western Way Southbound			Harley Knox Boulevard Westbound			Harley Knox Boulevard Eastbound			
Start Time	Left	Right	App. Total	Thru	Right	App. Total	Left	Thru	App. Total	Int. Total
Peak Hour Analysis From 04:15 PM to 05:00 PM - Peak 1 of 1										
Peak Hour for Entire Intersection Begins at 04:15 PM										
04:15 PM	0	0	0	**13**	0	**13**	0	5	5	18
04:30 PM	0	0	0	13	0	13	**1**	5	6	**19**
04:45 PM	0	0	0	7	0	7	0	**9**	**9**	16
05:00 PM	0	0	0	7	0	7	0	6	6	13
Total Volume	0	0	0	40	0	40	1	25	26	66
% App. Total	0	0		100	0		3.8	96.2		
PHF	.000	.000	.000	.769	.000	.769	.250	.694	.722	.868

Counts Unlimited
PO Box 1178
Corona, CA 92878
(951) 268-6268

City of Perris
N/S: Western Way
E/W: Harley Knox Boulevard
Weather: Clear

File Name : PERWEHAPM
Site Code : 05115699
Start Date : 12/16/2015
Page No : 2

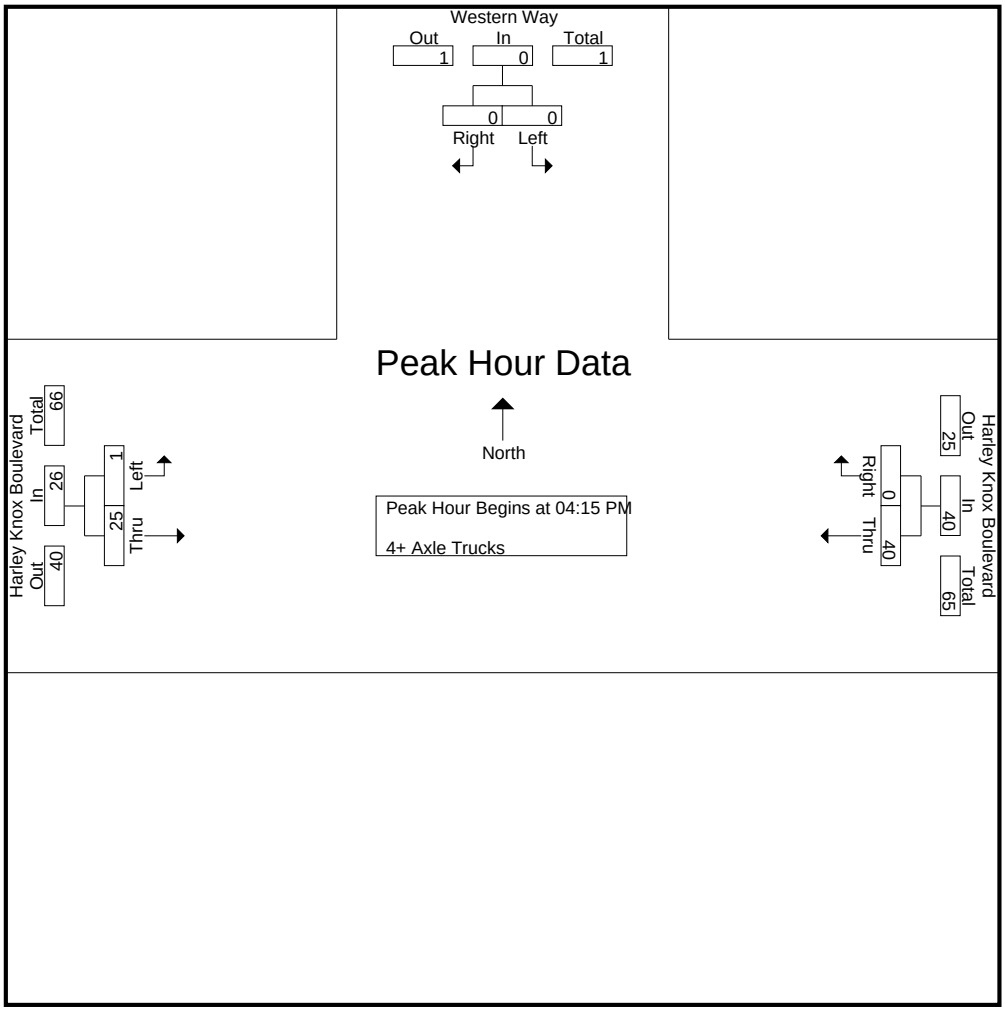

Peak Hour Analysis From 04:15 PM to 05:00 PM - Peak 1 of 1
Peak Hour for Each Approach Begins at:

	04:15 PM			04:15 PM			04:15 PM		
+0 mins.	0	0	0	**13**	0	**13**	0	5	5
+15 mins.	0	0	0	13	0	13	**1**	5	6
+30 mins.	0	0	0	7	0	7	0	**9**	**9**
+45 mins.	0	0	0	7	0	7	0	6	6
Total Volume	0	0	0	40	0	40	1	25	26
% App. Total	0	0		100	0		3.8	96.2	
PHF	.000	.000	.000	.769	.000	.769	.250	.694	.722

Location: Perris
N/S: Western Way
E/W: Harley Knox Boulevard

Site Code: 051-15699
Date: 12/16/2015
Weather: Clear

PEDESTRIANS

	North Leg Western Way	East Leg Harley Knox Boulevard	South Leg Western Way	West Leg Harley Knox Boulevard	TOTAL
7:00 AM	0	0	0	0	0
7:15 AM	0	0	0	0	0
7:30 AM	0	0	0	0	0
7:45 AM	0	0	0	0	0
8:00 AM	0	0	0	0	0
8:15 AM	0	0	0	0	0
8:30 AM	0	0	0	0	0
8:45 AM	0	0	0	0	0
TOTAL VOLUMES:	0	0	0	0	0

	North Leg Western Way	East Leg Harley Knox Boulevard	South Leg Western Way	West Leg Harley Knox Boulevard	TOTAL
4:00 PM	0	0	0	0	0
4:15 PM	0	0	0	0	0
4:30 PM	0	0	0	0	0
4:45 PM	0	0	0	0	0
5:00 PM	0	0	0	0	0
5:15 PM	0	0	0	0	0
5:30 PM	0	0	0	0	0
5:45 PM	0	0	0	0	0
TOTAL VOLUMES:	0	0	0	0	0

Counts Unlimited, Inc.
PO Box 1178
Corona, CA 92878
951-268-6268

Location: Perris
N/S: Western Way
E/W: Harley Knox Boulevard

Site Code: 051-15699
Date: 12/16/2015
Weather: Clear

BICYCLES

	North Leg Western Way	East Leg Harley Knox Boulevard	South Leg Western Way	West Leg Harley Knox Boulevard	TOTAL
7:00 AM	0	0	0	0	0
7:15 AM	0	0	0	0	0
7:30 AM	0	0	0	0	0
7:45 AM	0	0	0	0	0
8:00 AM	0	0	0	0	0
8:15 AM	0	0	0	0	0
8:30 AM	0	0	0	0	0
8:45 AM	0	0	0	0	0
TOTAL VOLUMES:	0	0	0	0	0

	North Leg Western Way	East Leg Harley Knox Boulevard	South Leg Western Way	West Leg Harley Knox Boulevard	TOTAL
4:00 PM	0	0	0	0	0
4:15 PM	0	0	0	0	0
4:30 PM	0	0	0	0	0
4:45 PM	0	0	0	0	0
5:00 PM	0	0	0	0	0
5:15 PM	0	0	0	0	0
5:30 PM	0	0	0	0	0
5:45 PM	0	0	0	0	0
TOTAL VOLUMES:	0	0	0	0	0

Counts Unlimited, Inc.
PO Box 1178
Corona, CA 92878
951-268-6268

Counts Unlimited
PO Box 1178
Corona, CA 92878
(951) 268-6268

City of Perris
N/S: Patterson Avenue
E/W: Harley Knox Boulevard
Weather: Clear

File Name : PERPAHAAM
Site Code : 05115699
Start Date : 12/16/2015
Page No : 1

Groups Printed- Passenger Vehicles - Large 2 Axle Vehicles - 3 Axle Vehicles - 4+ Axle Trucks

	Patterson Avenue Southbound					Harley Knox Boulevard Westbound					Patterson Avenue Northbound					Harley Knox Boulevard Eastbound							
Start Time	Left	Thru	Right	RTOR	App. Total	Left	Thru	Right	RTOR	App. Total	Left	Thru	Right	RTOR	App. Total	Left	Thru	Right	RTOR	App. Total	Exclu. Total	Inclu. Total	Int. Total
07:00 AM	0	0	1	0	1	0	238	5	0	243	17	2	1	1	20	3	108	2	0	113	1	377	378
07:15 AM	2	2	0	0	4	0	138	2	0	140	22	0	2	2	24	1	104	2	0	107	2	275	277
07:30 AM	0	1	2	1	3	1	139	1	0	141	25	0	0	0	25	1	129	1	1	131	2	300	302
07:45 AM	0	0	2	1	2	0	121	2	0	123	13	0	2	1	15	1	138	5	1	144	3	284	287
Total	2	3	5	2	10	1	636	10	0	647	77	2	5	4	84	6	479	10	2	495	8	1236	1244
08:00 AM	1	0	2	0	3	0	95	3	0	98	17	0	2	2	19	5	99	4	0	108	2	228	230
08:15 AM	2	0	2	0	4	1	81	0	0	82	9	0	0	0	9	0	72	5	1	77	1	172	173
08:30 AM	1	3	1	0	5	0	61	1	0	62	4	1	0	0	5	3	66	4	1	73	1	145	146
08:45 AM	1	0	0	0	1	1	65	0	0	66	3	1	0	0	4	1	62	5	0	68	0	139	139
Total	5	3	5	0	13	2	302	4	0	308	33	2	2	2	37	9	299	18	2	326	4	684	688
Grand Total	7	6	10	2	23	3	938	14	0	955	110	4	7	6	121	15	778	28	4	821	12	1920	1932
Apprch %	30.4	26.1	43.5			0.3	98.2	1.5			90.9	3.3	5.8			1.8	94.8	3.4					
Total %	0.4	0.3	0.5		1.2	0.2	48.9	0.7		49.7	5.7	0.2	0.4		6.3	0.8	40.5	1.5		42.8	0.6	99.4	
Passenger Vehicles	4	5	6		16	3	822	10		835	107	4	6		122	11	667	21		702	0	0	1675
% Passenger Vehicles	57.1	83.3	60	50	64	100	87.6	71.4	0	87.4	97.3	100	85.7	83.3	96.1	73.3	85.7	75	75	85.1	0	0	86.7
Large 2 Axle Vehicles	0	0	2		2	0	25	1		26	1	0	0		1	2	28	5		36	0	0	65
% Large 2 Axle Vehicles	0	0	20	0	8	0	2.7	7.1	0	2.7	0.9	0	0	0	0.8	13.3	3.6	17.9	25	4.4	0	0	3.4
3 Axle Vehicles	2	1	1		5	0	24	2		26	2	0	1		4	0	25	2		27	0	0	62
% 3 Axle Vehicles	28.6	16.7	10	50	20	0	2.6	14.3	0	2.7	1.8	0	14.3	16.7	3.1	0	3.2	7.1	0	3.3	0	0	3.2
4+ Axle Trucks	1	0	1		2	0	67	1		68	0	0	0		0	2	58	0		60	0	0	130
% 4+ Axle Trucks	14.3	0	10	0	8	0	7.1	7.1	0	7.1	0	0	0	0	0	13.3	7.5	0	0	7.3	0	0	6.7

	Patterson Avenue Southbound				Harley Knox Boulevard Westbound				Patterson Avenue Northbound				Harley Knox Boulevard Eastbound				
Start Time	Left	Thru	Right	App. Total	Left	Thru	Right	App. Total	Left	Thru	Right	App. Total	Left	Thru	Right	App. Total	Int. Total
Peak Hour Analysis From 07:00 AM to 08:45 AM - Peak 1 of 1																	
Peak Hour for Entire Intersection Begins at 07:00 AM																	
07:00 AM	0	0	1	1	0	**238**	**5**	**243**	17	**2**	1	20	**3**	108	2	113	**377**
07:15 AM	**2**	**2**	0	**4**	0	138	2	140	22	0	**2**	24	1	104	2	107	275
07:30 AM	0	1	**2**	3	**1**	139	1	141	**25**	0	0	**25**	1	129	1	131	300
07:45 AM	0	0	2	2	0	121	2	123	13	0	2	15	1	**138**	**5**	**144**	284
Total Volume	2	3	5	10	1	636	10	647	77	2	5	84	6	479	10	495	1236
% App. Total	20	30	50		0.2	98.3	1.5		91.7	2.4	6		1.2	96.8	2		
PHF	.250	.375	.625	.625	.250	.668	.500	.666	.770	.250	.625	.840	.500	.868	.500	.859	.820

Counts Unlimited
PO Box 1178
Corona, CA 92878
(951) 268-6268

City of Perris
N/S: Patterson Avenue
E/W: Harley Knox Boulevard
Weather: Clear

File Name : PERPAHAAM
Site Code : 05115699
Start Date : 12/16/2015
Page No : 2

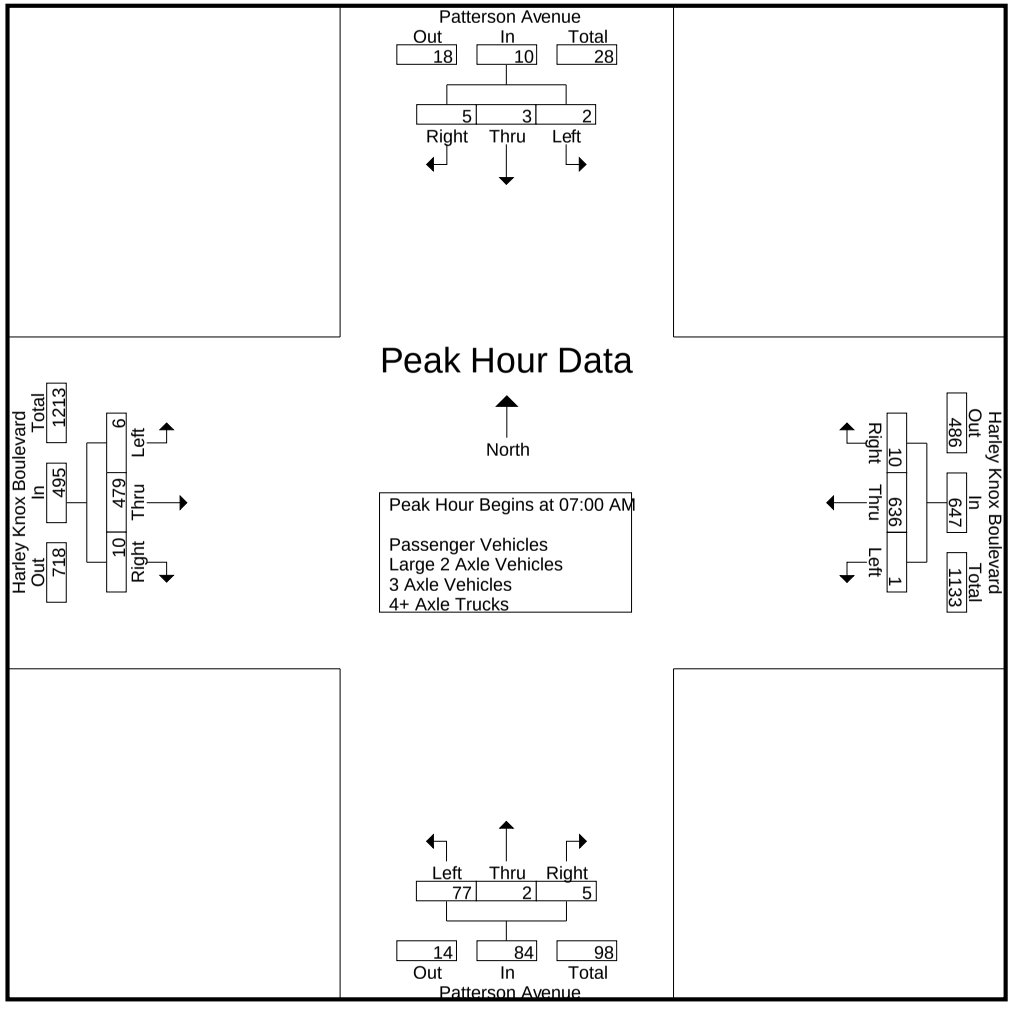

Counts Unlimited
PO Box 1178
Corona, CA 92878
(951) 268-6268

City of Perris
N/S: Patterson Avenue
E/W: Harley Knox Boulevard
Weather: Clear

File Name : PERPAHAAM
Site Code : 05115699
Start Date : 12/16/2015
Page No : 3

	Patterson Avenue Southbound				Harley Knox Boulevard Westbound				Patterson Avenue Northbound				Harley Knox Boulevard Eastbound				
Start Time	Left	Thru	Right	App. Total	Left	Thru	Right	App. Total	Left	Thru	Right	App. Total	Left	Thru	Right	App. Total	Int. Total
Peak Hour Analysis From 07:00 AM to 08:45 AM - Peak 1 of 1																	
Peak Hour for Each Approach Begins at:																	
	07:45 AM				07:00 AM				07:00 AM				07:00 AM				
+0 mins.	0	0	**2**	2	0	**238**	**5**	**243**	17	**2**	1	20	**3**	108	2	113	
+15 mins.	1	0	2	3	0	138	2	140	22	0	**2**	24	1	104	2	107	
+30 mins.	**2**	0	2	4	**1**	139	1	141	**25**	0	0	**25**	1	129	1	131	
+45 mins.	1	**3**	1	**5**	0	121	2	123	13	0	2	15	1	**138**	**5**	**144**	
Total Volume	4	3	7	14	1	636	10	647	77	2	5	84	6	479	10	495	
% App. Total	28.6	21.4	50		0.2	98.3	1.5		91.7	2.4	6		1.2	96.8	2		
PHF	.500	.250	.875	.700	.250	.668	.500	.666	.770	.250	.625	.840	.500	.868	.500	.859	

Counts Unlimited
PO Box 1178
Corona, CA 92878
(951) 268-6268

City of Perris
N/S: Patterson Avenue
E/W: Harley Knox Boulevard
Weather: Clear

File Name : PERPAHAAM
Site Code : 05115699
Start Date : 12/16/2015
Page No : 1

Groups Printed- Passenger Vehicles

	Patterson Avenue Southbound					Harley Knox Boulevard Westbound					Patterson Avenue Northbound					Harley Knox Boulevard Eastbound							
Start Time	Left	Thru	Right	RTOR	App. Total	Left	Thru	Right	RTOR	App. Total	Left	Thru	Right	RTOR	App. Total	Left	Thru	Right	RTOR	App. Total	Exclu. Total	Inclu. Total	Int. Total
07:00 AM	0	0	1	0	1	0	230	4	0	234	15	2	1	1	18	3	93	2	0	98	1	351	352
07:15 AM	1	1	0	0	2	0	127	1	0	128	22	0	1	1	23	0	89	1	0	90	1	243	244
07:30 AM	0	1	2	1	3	1	122	0	0	123	25	0	0	0	25	0	116	1	1	117	2	268	270
07:45 AM	0	0	1	0	1	0	108	2	0	110	13	0	2	1	15	0	129	4	1	133	2	259	261
Total	1	2	4	1	7	1	587	7	0	595	75	2	4	3	81	3	427	8	2	438	6	1121	1127
08:00 AM	1	0	0	0	1	0	74	2	0	76	16	0	2	2	18	5	85	3	0	93	2	188	190
08:15 AM	0	0	1	0	1	1	66	0	0	67	9	0	0	0	9	0	60	4	1	64	1	141	142
08:30 AM	1	3	1	0	5	0	46	1	0	47	4	1	0	0	5	2	49	2	0	53	0	110	110
08:45 AM	1	0	0	0	1	1	49	0	0	50	3	1	0	0	4	1	46	4	0	51	0	106	106
Total	3	3	2	0	8	2	235	3	0	240	32	2	2	2	36	8	240	13	1	261	3	545	548
Grand Total	4	5	6	1	15	3	822	10	0	835	107	4	6	5	117	11	667	21	3	699	9	1666	1675
Apprch %	26.7	33.3	40			0.4	98.4	1.2			91.5	3.4	5.1			1.6	95.4	3					
Total %	0.2	0.3	0.4		0.9	0.2	49.3	0.6		50.1	6.4	0.2	0.4		7	0.7	40	1.3		42	0.5	99.5	

	Patterson Avenue Southbound				Harley Knox Boulevard Westbound				Patterson Avenue Northbound				Harley Knox Boulevard Eastbound				
Start Time	Left	Thru	Right	App. Total	Left	Thru	Right	App. Total	Left	Thru	Right	App. Total	Left	Thru	Right	App. Total	Int. Total
Peak Hour Analysis From 07:00 AM to 07:45 AM - Peak 1 of 1																	
Peak Hour for Entire Intersection Begins at 07:00 AM																	
07:00 AM	0	0	1	1	0	**230**	**4**	**234**	15	**2**	1	18	**3**	93	2	98	**351**
07:15 AM	**1**	**1**	0	2	0	127	1	128	22	0	1	23	0	89	1	90	243
07:30 AM	0	1	**2**	**3**	**1**	122	0	123	**25**	0	0	**25**	0	116	1	117	268
07:45 AM	0	0	1	1	0	108	2	110	13	0	**2**	15	0	**129**	**4**	**133**	259
Total Volume	1	2	4	7	1	587	7	595	75	2	4	81	3	427	8	438	1121
% App. Total	14.3	28.6	57.1		0.2	98.7	1.2		92.6	2.5	4.9		0.7	97.5	1.8		
PHF	.250	.500	.500	.583	.250	.638	.438	.636	.750	.250	.500	.810	.250	.828	.500	.823	.798

Counts Unlimited
PO Box 1178
Corona, CA 92878
(951) 268-6268

City of Perris
N/S: Patterson Avenue
E/W: Harley Knox Boulevard
Weather: Clear

File Name : PERPAHAAM
Site Code : 05115699
Start Date : 12/16/2015
Page No : 2

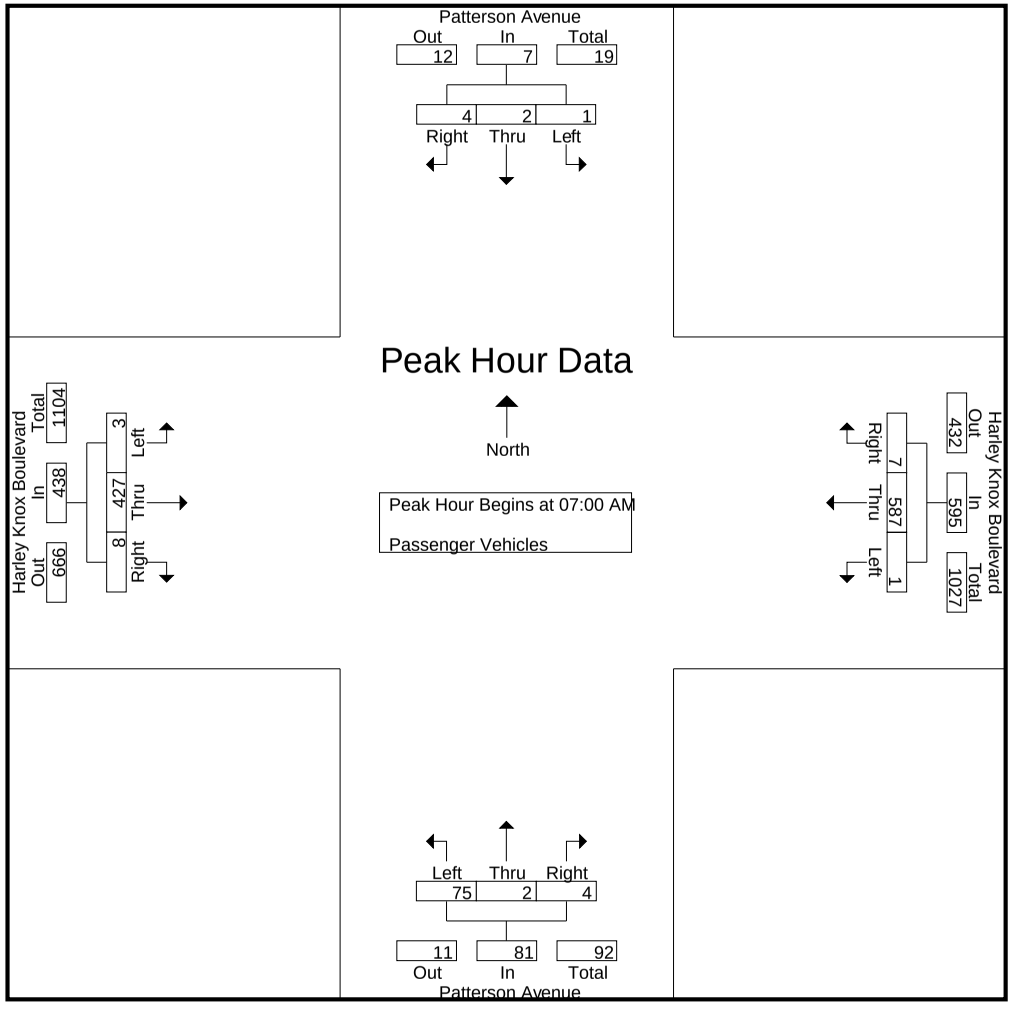

Counts Unlimited
PO Box 1178
Corona, CA 92878
(951) 268-6268

City of Perris
N/S: Patterson Avenue
E/W: Harley Knox Boulevard
Weather: Clear

File Name : PERPAHAAM
Site Code : 05115699
Start Date : 12/16/2015
Page No : 3

	Patterson Avenue Southbound				Harley Knox Boulevard Westbound				Patterson Avenue Northbound				Harley Knox Boulevard Eastbound				
Start Time	Left	Thru	Right	App. Total	Left	Thru	Right	App. Total	Left	Thru	Right	App. Total	Left	Thru	Right	App. Total	Int. Total
Peak Hour Analysis From 07:00 AM to 07:45 AM - Peak 1 of 1																	
Peak Hour for Each Approach Begins at:																	
	07:00 AM				07:00 AM				07:00 AM				07:00 AM				
+0 mins.	0	0	1	1	0	**230**	**4**	**234**	15	**2**	1	18	**3**	93	2	98	
+15 mins.	**1**	**1**	0	2	0	127	1	128	22	0	1	23	0	89	1	90	
+30 mins.	0	1	**2**	**3**	**1**	122	0	123	**25**	0	0	**25**	0	116	1	117	
+45 mins.	0	0	1	1	0	108	2	110	13	0	**2**	15	0	**129**	**4**	**133**	
Total Volume	1	2	4	7	1	587	7	595	75	2	4	81	3	427	8	438	
% App. Total	14.3	28.6	57.1		0.2	98.7	1.2		92.6	2.5	4.9		0.7	97.5	1.8		
PHF	.250	.500	.500	.583	.250	.638	.438	.636	.750	.250	.500	.810	.250	.828	.500	.823	

Counts Unlimited
PO Box 1178
Corona, CA 92878
(951) 268-6268

City of Perris
N/S: Patterson Avenue
E/W: Harley Knox Boulevard
Weather: Clear

File Name : PERPAHAAM
Site Code : 05115699
Start Date : 12/16/2015
Page No : 1

Groups Printed- Large 2 Axle Vehicles

	Patterson Avenue Southbound					Harley Knox Boulevard Westbound					Patterson Avenue Northbound					Harley Knox Boulevard Eastbound							
Start Time	Left	Thru	Right	RTOR	App. Total	Left	Thru	Right	RTOR	App. Total	Left	Thru	Right	RTOR	App. Total	Left	Thru	Right	RTOR	App. Total	Exclu. Total	Inclu. Total	Int. Total
07:00 AM	0	0	0	0	0	0	1	0	0	1	1	0	0	0	1	0	3	0	0	3	0	5	5
07:15 AM	0	0	0	0	0	0	1	0	0	1	0	0	0	0	0	1	4	1	0	6	0	7	7
07:30 AM	0	0	0	0	0	0	3	1	0	4	0	0	0	0	0	1	4	0	0	5	0	9	9
07:45 AM	0	0	0	0	0	0	6	0	0	6	0	0	0	0	0	0	2	1	0	3	0	9	9
Total	0	0	0	0	0	0	11	1	0	12	1	0	0	0	1	2	13	2	0	17	0	30	30
08:00 AM	0	0	1	0	1	0	3	0	0	3	0	0	0	0	0	0	3	1	0	4	0	8	8
08:15 AM	0	0	1	0	1	0	5	0	0	5	0	0	0	0	0	0	2	1	0	3	0	9	9
08:30 AM	0	0	0	0	0	0	3	0	0	3	0	0	0	0	0	0	6	1	1	7	1	10	11
08:45 AM	0	0	0	0	0	0	3	0	0	3	0	0	0	0	0	0	4	0	0	4	0	7	7
Total	0	0	2	0	2	0	14	0	0	14	0	0	0	0	0	0	15	3	1	18	1	34	35
Grand Total	0	0	2	0	2	0	25	1	0	26	1	0	0	0	1	2	28	5	1	35	1	64	65
Apprch %	0	0	100			0	96.2	3.8			100	0	0			5.7	80	14.3					
Total %	0	0	3.1		3.1	0	39.1	1.6		40.6	1.6	0	0		1.6	3.1	43.8	7.8		54.7	1.5	98.5	

	Patterson Avenue Southbound				Harley Knox Boulevard Westbound				Patterson Avenue Northbound				Harley Knox Boulevard Eastbound				
Start Time	Left	Thru	Right	App. Total	Left	Thru	Right	App. Total	Left	Thru	Right	App. Total	Left	Thru	Right	App. Total	Int. Total
Peak Hour Analysis From 07:00 AM to 07:45 AM - Peak 1 of 1																	
Peak Hour for Entire Intersection Begins at 07:00 AM																	
07:00 AM	0	0	0	0	0	1	0	1	**1**	0	0	**1**	0	3	0	3	5
07:15 AM	0	0	0	0	0	1	0	1	0	0	0	0	**1**	**4**	**1**	**6**	7
07:30 AM	0	0	0	0	0	3	**1**	4	0	0	0	0	1	4	0	5	**9**
07:45 AM	0	0	0	0	0	**6**	0	**6**	0	0	0	0	0	2	1	3	9
Total Volume	0	0	0	0	0	11	1	12	1	0	0	1	2	13	2	17	30
% App. Total	0	0	0		0	91.7	8.3		100	0	0		11.8	76.5	11.8		
PHF	.000	.000	.000	.000	.000	.458	.250	.500	.250	.000	.000	.250	.500	.813	.500	.708	.833

Counts Unlimited
PO Box 1178
Corona, CA 92878
(951) 268-6268

City of Perris
N/S: Patterson Avenue
E/W: Harley Knox Boulevard
Weather: Clear

File Name : PERPAHAAM
Site Code : 05115699
Start Date : 12/16/2015
Page No : 2

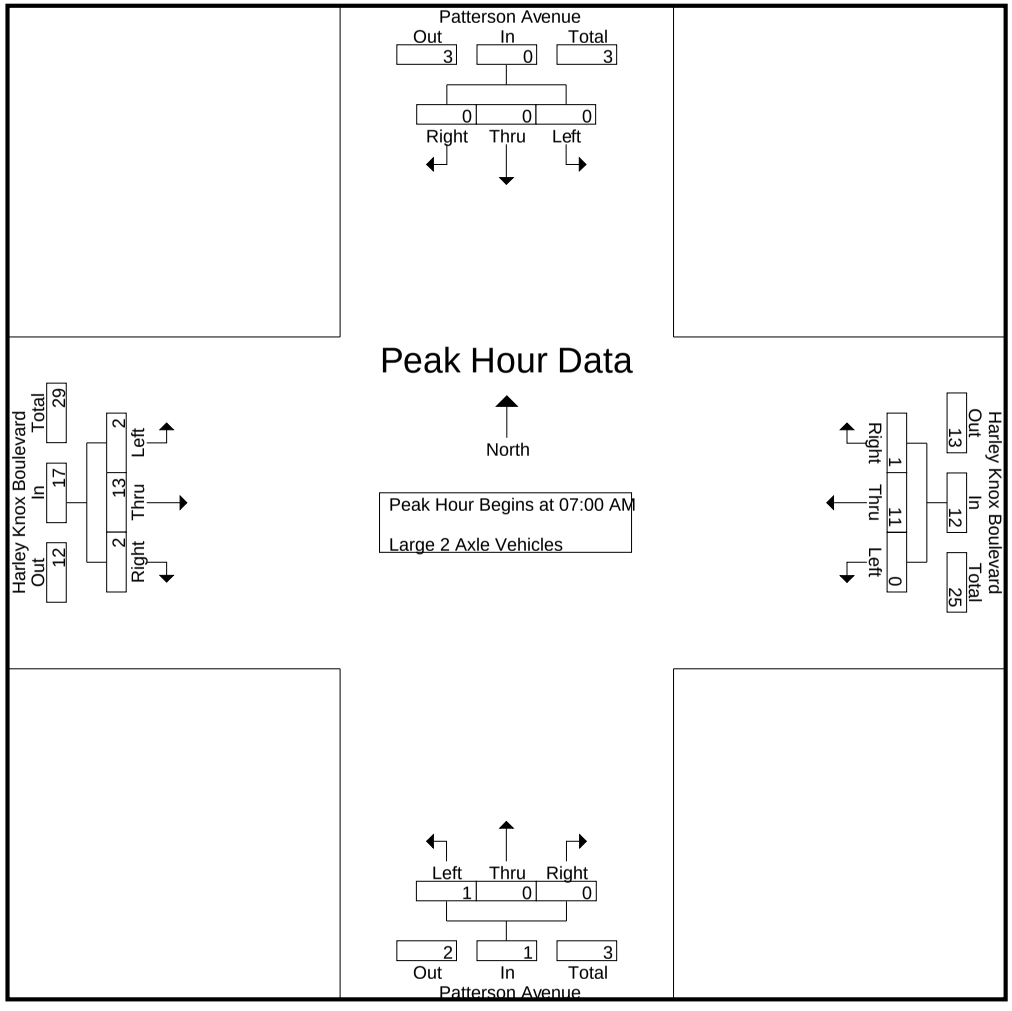

Counts Unlimited
PO Box 1178
Corona, CA 92878
(951) 268-6268

City of Perris
N/S: Patterson Avenue
E/W: Harley Knox Boulevard
Weather: Clear

File Name : PERPAHAAM
Site Code : 05115699
Start Date : 12/16/2015
Page No : 3

	Patterson Avenue Southbound				Harley Knox Boulevard Westbound				Patterson Avenue Northbound				Harley Knox Boulevard Eastbound				
Start Time	Left	Thru	Right	App. Total	Left	Thru	Right	App. Total	Left	Thru	Right	App. Total	Left	Thru	Right	App. Total	Int. Total
Peak Hour Analysis From 07:00 AM to 07:45 AM - Peak 1 of 1																	
Peak Hour for Each Approach Begins at:																	
	07:00 AM				07:00 AM				07:00 AM				07:00 AM				
+0 mins.	0	0	0	0	0	1	0	1	**1**	0	0	**1**	0	3	0	3	
+15 mins.	0	0	0	0	0	1	0	1	0	0	0	0	**1**	**4**	**1**	**6**	
+30 mins.	0	0	0	0	0	3	**1**	4	0	0	0	0	1	4	0	5	
+45 mins.	0	0	0	0	0	**6**	0	**6**	0	0	0	0	0	2	1	3	
Total Volume	0	0	0	0	0	11	1	12	1	0	0	1	2	13	2	17	
% App. Total	0	0	0		0	91.7	8.3		100	0	0		11.8	76.5	11.8		
PHF	.000	.000	.000	.000	.000	.458	.250	.500	.250	.000	.000	.250	.500	.813	.500	.708	

Counts Unlimited
PO Box 1178
Corona, CA 92878
(951) 268-6268

City of Perris
N/S: Patterson Avenue
E/W: Harley Knox Boulevard
Weather: Clear

File Name : PERPAHAAM
Site Code : 05115699
Start Date : 12/16/2015
Page No : 1

Groups Printed- 3 Axle Vehicles

	Patterson Avenue Southbound					Harley Knox Boulevard Westbound					Patterson Avenue Northbound					Harley Knox Boulevard Eastbound							
Start Time	Left	Thru	Right	RTOR	App. Total	Left	Thru	Right	RTOR	App. Total	Left	Thru	Right	RTOR	App. Total	Left	Thru	Right	RTOR	App. Total	Exclu. Total	Inclu. Total	Int. Total
07:00 AM	0	0	0	0	0	0	2	0	0	2	1	0	0	0	1	0	4	0	0	4	0	7	7
07:15 AM	1	1	0	0	2	0	3	1	0	4	0	0	1	1	1	0	0	0	0	0	1	7	8
07:30 AM	0	0	0	0	0	0	4	0	0	4	0	0	0	0	0	0	4	0	0	4	0	8	8
07:45 AM	0	0	1	1	1	0	1	0	0	1	0	0	0	0	0	0	3	0	0	3	1	5	6
Total	1	1	1	1	3	0	10	1	0	11	1	0	1	1	2	0	11	0	0	11	2	27	29
08:00 AM	0	0	0	0	0	0	2	1	0	3	1	0	0	0	1	0	2	0	0	2	0	6	6
08:15 AM	1	0	0	0	1	0	3	0	0	3	0	0	0	0	0	0	5	0	0	5	0	9	9
08:30 AM	0	0	0	0	0	0	7	0	0	7	0	0	0	0	0	0	4	1	0	5	0	12	12
08:45 AM	0	0	0	0	0	0	2	0	0	2	0	0	0	0	0	0	3	1	0	4	0	6	6
Total	1	0	0	0	1	0	14	1	0	15	1	0	0	0	1	0	14	2	0	16	0	33	33
Grand Total	2	1	1	1	4	0	24	2	0	26	2	0	1	1	3	0	25	2	0	27	2	60	62
Apprch %	50	25	25			0	92.3	7.7			66.7	0	33.3			0	92.6	7.4					
Total %	3.3	1.7	1.7		6.7	0	40	3.3		43.3	3.3	0	1.7		5	0	41.7	3.3		45	3.2	96.8	

	Patterson Avenue Southbound				Harley Knox Boulevard Westbound				Patterson Avenue Northbound				Harley Knox Boulevard Eastbound				
Start Time	Left	Thru	Right	App. Total	Left	Thru	Right	App. Total	Left	Thru	Right	App. Total	Left	Thru	Right	App. Total	Int. Total
Peak Hour Analysis From 07:00 AM to 07:45 AM - Peak 1 of 1																	
Peak Hour for Entire Intersection Begins at 07:00 AM																	
07:00 AM	0	0	0	0	0	2	0	2	**1**	0	0	**1**	0	**4**	0	**4**	7
07:15 AM	**1**	**1**	0	**2**	0	3	**1**	**4**	0	0	**1**	1	0	0	0	0	7
07:30 AM	0	0	0	0	0	**4**	0	4	0	0	0	0	0	4	0	4	**8**
07:45 AM	0	0	**1**	1	0	1	0	1	0	0	0	0	0	3	0	3	5
Total Volume	1	1	1	3	0	10	1	11	1	0	1	2	0	11	0	11	27
% App. Total	33.3	33.3	33.3		0	90.9	9.1		50	0	50		0	100	0		
PHF	.250	.250	.250	.375	.000	.625	.250	.688	.250	.000	.250	.500	.000	.688	.000	.688	.844

Counts Unlimited
PO Box 1178
Corona, CA 92878
(951) 268-6268

City of Perris
N/S: Patterson Avenue
E/W: Harley Knox Boulevard
Weather: Clear

File Name : PERPAHAAM
Site Code : 05115699
Start Date : 12/16/2015
Page No : 2

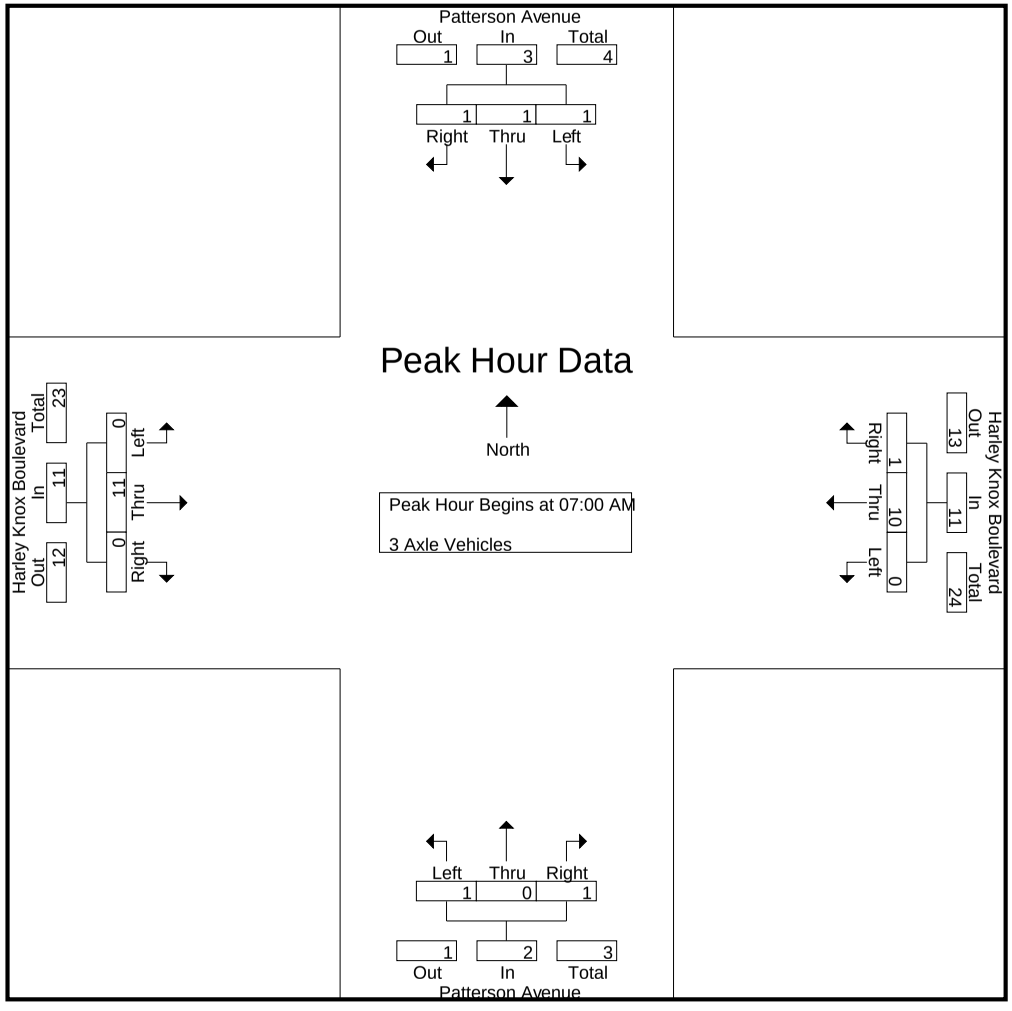

Counts Unlimited
PO Box 1178
Corona, CA 92878
(951) 268-6268

City of Perris
N/S: Patterson Avenue
E/W: Harley Knox Boulevard
Weather: Clear

File Name : PERPAHAAM
Site Code : 05115699
Start Date : 12/16/2015
Page No : 3

	Patterson Avenue Southbound				Harley Knox Boulevard Westbound				Patterson Avenue Northbound				Harley Knox Boulevard Eastbound				
Start Time	Left	Thru	Right	App. Total	Left	Thru	Right	App. Total	Left	Thru	Right	App. Total	Left	Thru	Right	App. Total	Int. Total
Peak Hour Analysis From 07:00 AM to 07:45 AM - Peak 1 of 1																	
Peak Hour for Each Approach Begins at:																	
	07:00 AM				07:00 AM				07:00 AM				07:00 AM				
+0 mins.	0	0	0	0	0	2	0	2	**1**	0	0	**1**	0	**4**	0	**4**	
+15 mins.	**1**	**1**	0	**2**	0	3	**1**	**4**	0	0	**1**	1	0	0	0	0	
+30 mins.	0	0	0	0	0	**4**	0	4	0	0	0	0	0	4	0	4	
+45 mins.	0	0	**1**	1	0	1	0	1	0	0	0	0	0	3	0	3	
Total Volume	1	1	1	3	0	10	1	11	1	0	1	2	0	11	0	11	
% App. Total	33.3	33.3	33.3		0	90.9	9.1		50	0	50		0	100	0		
PHF	.250	.250	.250	.375	.000	.625	.250	.688	.250	.000	.250	.500	.000	.688	.000	.688	

Counts Unlimited
PO Box 1178
Corona, CA 92878
(951) 268-6268

City of Perris
N/S: Patterson Avenue
E/W: Harley Knox Boulevard
Weather: Clear

File Name : PERPAHAAM
Site Code : 05115699
Start Date : 12/16/2015
Page No : 1

Groups Printed- 4+ Axle Trucks

	Patterson Avenue Southbound					Harley Knox Boulevard Westbound					Patterson Avenue Northbound					Harley Knox Boulevard Eastbound							
Start Time	Left	Thru	Right	RTOR	App. Total	Left	Thru	Right	RTOR	App. Total	Left	Thru	Right	RTOR	App. Total	Left	Thru	Right	RTOR	App. Total	Exclu. Total	Inclu. Total	Int. Total
07:00 AM	0	0	0	0	0	0	5	1	0	6	0	0	0	0	0	0	8	0	0	8	0	14	14
07:15 AM	0	0	0	0	0	0	7	0	0	7	0	0	0	0	0	0	11	0	0	11	0	18	18
07:30 AM	0	0	0	0	0	0	10	0	0	10	0	0	0	0	0	0	5	0	0	5	0	15	15
07:45 AM	0	0	0	0	0	0	6	0	0	6	0	0	0	0	0	1	4	0	0	5	0	11	11
Total	0	0	0	0	0	0	28	1	0	29	0	0	0	0	0	1	28	0	0	29	0	58	58
08:00 AM	0	0	1	0	1	0	16	0	0	16	0	0	0	0	0	0	9	0	0	9	0	26	26
08:15 AM	1	0	0	0	1	0	7	0	0	7	0	0	0	0	0	0	5	0	0	5	0	13	13
08:30 AM	0	0	0	0	0	0	5	0	0	5	0	0	0	0	0	1	7	0	0	8	0	13	13
08:45 AM	0	0	0	0	0	0	11	0	0	11	0	0	0	0	0	0	9	0	0	9	0	20	20
Total	1	0	1	0	2	0	39	0	0	39	0	0	0	0	0	1	30	0	0	31	0	72	72
Grand Total	1	0	1	0	2	0	67	1	0	68	0	0	0	0	0	2	58	0	0	60	0	130	130
Apprch %	50	0	50			0	98.5	1.5			0	0	0			3.3	96.7	0					
Total %	0.8	0	0.8		1.5	0	51.5	0.8		52.3	0	0	0		0	1.5	44.6	0		46.2	0	100	

	Patterson Avenue Southbound				Harley Knox Boulevard Westbound				Patterson Avenue Northbound				Harley Knox Boulevard Eastbound				
Start Time	Left	Thru	Right	App. Total	Left	Thru	Right	App. Total	Left	Thru	Right	App. Total	Left	Thru	Right	App. Total	Int. Total
Peak Hour Analysis From 07:00 AM to 07:45 AM - Peak 1 of 1																	
Peak Hour for Entire Intersection Begins at 07:00 AM																	
07:00 AM	0	0	0	0	0	5	**1**	6	0	0	0	0	0	8	0	8	14
07:15 AM	0	0	0	0	0	7	0	7	0	0	0	0	0	**11**	0	**11**	**18**
07:30 AM	0	0	0	0	0	**10**	0	**10**	0	0	0	0	0	5	0	5	15
07:45 AM	0	0	0	0	0	6	0	6	0	0	0	0	**1**	4	0	5	11
Total Volume	0	0	0	0	0	28	1	29	0	0	0	0	1	28	0	29	58
% App. Total	0	0	0		0	96.6	3.4		0	0	0		3.4	96.6	0		
PHF	.000	.000	.000	.000	.000	.700	.250	.725	.000	.000	.000	.000	.250	.636	.000	.659	.806

Counts Unlimited
PO Box 1178
Corona, CA 92878
(951) 268-6268

City of Perris
N/S: Patterson Avenue
E/W: Harley Knox Boulevard
Weather: Clear

File Name : PERPAHAAM
Site Code : 05115699
Start Date : 12/16/2015
Page No : 2

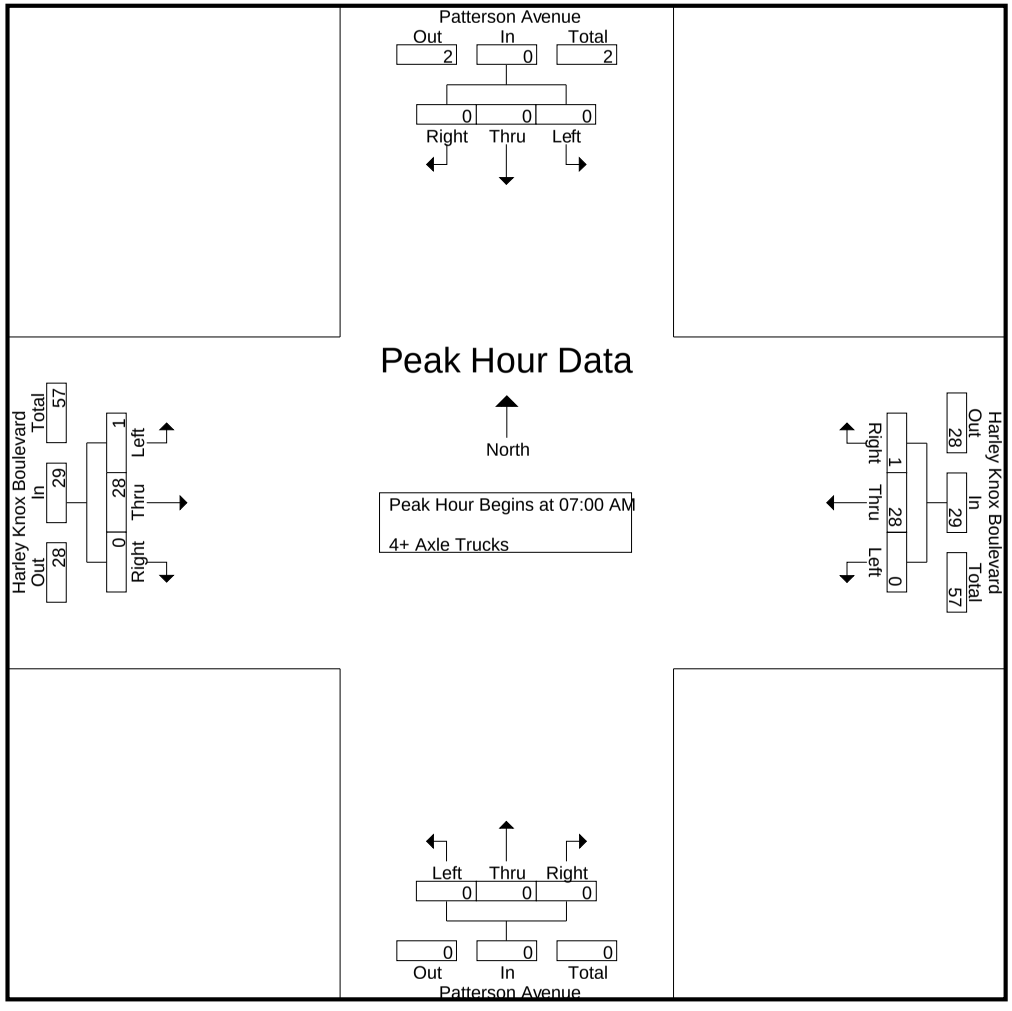

Counts Unlimited
PO Box 1178
Corona, CA 92878
(951) 268-6268

City of Perris
N/S: Patterson Avenue
E/W: Harley Knox Boulevard
Weather: Clear

File Name : PERPAHAAM
Site Code : 05115699
Start Date : 12/16/2015
Page No : 3

	Patterson Avenue Southbound				Harley Knox Boulevard Westbound				Patterson Avenue Northbound				Harley Knox Boulevard Eastbound				
Start Time	Left	Thru	Right	App. Total	Left	Thru	Right	App. Total	Left	Thru	Right	App. Total	Left	Thru	Right	App. Total	Int. Total
Peak Hour Analysis From 07:00 AM to 07:45 AM - Peak 1 of 1																	
Peak Hour for Each Approach Begins at:																	
	07:00 AM				07:00 AM				07:00 AM				07:00 AM				
+0 mins.	0	0	0	0	0	5	**1**	6	0	0	0	0	0	8	0	8	
+15 mins.	0	0	0	0	0	7	0	7	0	0	0	0	0	**11**	0	**11**	
+30 mins.	0	0	0	0	0	**10**	0	**10**	0	0	0	0	0	5	0	5	
+45 mins.	0	0	0	0	0	6	0	6	0	0	0	0	**1**	4	0	5	
Total Volume	0	0	0	0	0	28	1	29	0	0	0	0	1	28	0	29	
% App. Total	0	0	0		0	96.6	3.4		0	0	0		3.4	96.6	0		
PHF	.000	.000	.000	.000	.000	.700	.250	.725	.000	.000	.000	.000	.250	.636	.000	.659	

Counts Unlimited
PO Box 1178
Corona, CA 92878
(951) 268-6268

City of Perris
N/S: Patterson Avenue
E/W: Harley Knox Boulevard
Weather: Clear

File Name : PERPAHAPM
Site Code : 05115699
Start Date : 12/16/2015
Page No : 1

Groups Printed- Passenger Vehicles - Large 2 Axle Vehicles - 3 Axle Vehicles - 4+ Axle Trucks

	Patterson Avenue Southbound					Harley Knox Boulevard Westbound					Patterson Avenue Northbound					Harley Knox Boulevard Eastbound							
Start Time	Left	Thru	Right	RTOR	App. Total	Left	Thru	Right	RTOR	App. Total	Left	Thru	Right	RTOR	App. Total	Left	Thru	Right	RTOR	App. Total	Exclu. Total	Inclu. Total	Int. Total
04:00 PM	1	0	0	0	1	3	111	0	0	114	9	0	2	1	11	0	112	9	0	121	1	247	248
04:15 PM	1	0	3	2	4	2	93	0	0	95	9	2	3	2	14	1	137	8	0	146	4	259	263
04:30 PM	3	1	5	4	9	0	150	2	0	152	8	0	2	2	10	1	181	3	0	185	6	356	362
04:45 PM	1	0	2	0	3	0	208	0	0	208	5	0	0	0	5	1	121	9	0	131	0	347	347
Total	6	1	10	6	17	5	562	2	0	569	31	2	7	5	40	3	551	29	0	583	11	1209	1220
05:00 PM	1	1	3	0	5	0	119	1	1	120	8	2	1	0	11	0	116	1	0	117	1	253	254
05:15 PM	0	0	0	0	0	1	86	1	0	88	6	0	1	0	7	2	99	14	0	115	0	210	210
05:30 PM	4	0	2	0	6	0	131	0	0	131	6	2	0	0	8	0	145	12	0	157	0	302	302
05:45 PM	1	0	1	0	2	0	139	0	0	139	7	0	2	2	9	0	161	8	0	169	2	319	321
Total	6	1	6	0	13	1	475	2	1	478	27	4	4	2	35	2	521	35	0	558	3	1084	1087
Grand Total	12	2	16	6	30	6	1037	4	1	1047	58	6	11	7	75	5	1072	64	0	1141	14	2293	2307
Apprch %	40	6.7	53.3			0.6	99	0.4			77.3	8	14.7			0.4	94	5.6					
Total %	0.5	0.1	0.7		1.3	0.3	45.2	0.2		45.7	2.5	0.3	0.5		3.3	0.2	46.8	2.8		49.8	0.6	99.4	
Passenger Vehicles	12	2	16		36	6	938	4		949	53	6	11		77	5	967	57		1029	0	0	2091
% Passenger Vehicles	100	100	100	100	100	100	90.5	100	100	90.6	91.4	100	100	100	93.9	100	90.2	89.1	0	90.2	0	0	90.6
Large 2 Axle Vehicles	0	0	0		0	0	8	0		8	3	0	0		3	0	14	6		20	0	0	31
% Large 2 Axle Vehicles	0	0	0	0	0	0	0.8	0	0	0.8	5.2	0	0	0	3.7	0	1.3	9.4	0	1.8	0	0	1.3
3 Axle Vehicles	0	0	0		0	0	17	0		17	0	0	0		0	0	43	0		43	0	0	60
% 3 Axle Vehicles	0	0	0	0	0	0	1.6	0	0	1.6	0	0	0	0	0	0	4	0	0	3.8	0	0	2.6
4+ Axle Trucks	0	0	0		0	0	74	0		74	2	0	0		2	0	48	1		49	0	0	125
% 4+ Axle Trucks	0	0	0	0	0	0	7.1	0	0	7.1	3.4	0	0	0	2.4	0	4.5	1.6	0	4.3	0	0	5.4

	Patterson Avenue Southbound				Harley Knox Boulevard Westbound				Patterson Avenue Northbound				Harley Knox Boulevard Eastbound				
Start Time	Left	Thru	Right	App. Total	Left	Thru	Right	App. Total	Left	Thru	Right	App. Total	Left	Thru	Right	App. Total	Int. Total
Peak Hour Analysis From 04:00 PM to 05:45 PM - Peak 1 of 1																	
Peak Hour for Entire Intersection Begins at 04:15 PM																	
04:15 PM	1	0	3	4	**2**	93	0	95	**9**	**2**	**3**	**14**	**1**	137	8	146	259
04:30 PM	**3**	**1**	**5**	**9**	0	150	**2**	152	8	0	2	10	1	**181**	3	**185**	**356**
04:45 PM	1	0	2	3	0	**208**	0	**208**	5	0	0	5	1	121	**9**	131	347
05:00 PM	1	1	3	5	0	119	1	120	8	2	1	11	0	116	1	117	253
Total Volume	6	2	13	21	2	570	3	575	30	4	6	40	3	555	21	579	1215
% App. Total	28.6	9.5	61.9		0.3	99.1	0.5		75	10	15		0.5	95.9	3.6		
PHF	.500	.500	.650	.583	.250	.685	.375	.691	.833	.500	.500	.714	.750	.767	.583	.782	.853

Counts Unlimited
PO Box 1178
Corona, CA 92878
(951) 268-6268

City of Perris
N/S: Patterson Avenue
E/W: Harley Knox Boulevard
Weather: Clear

File Name : PERPAHAPM
Site Code : 05115699
Start Date : 12/16/2015
Page No : 2

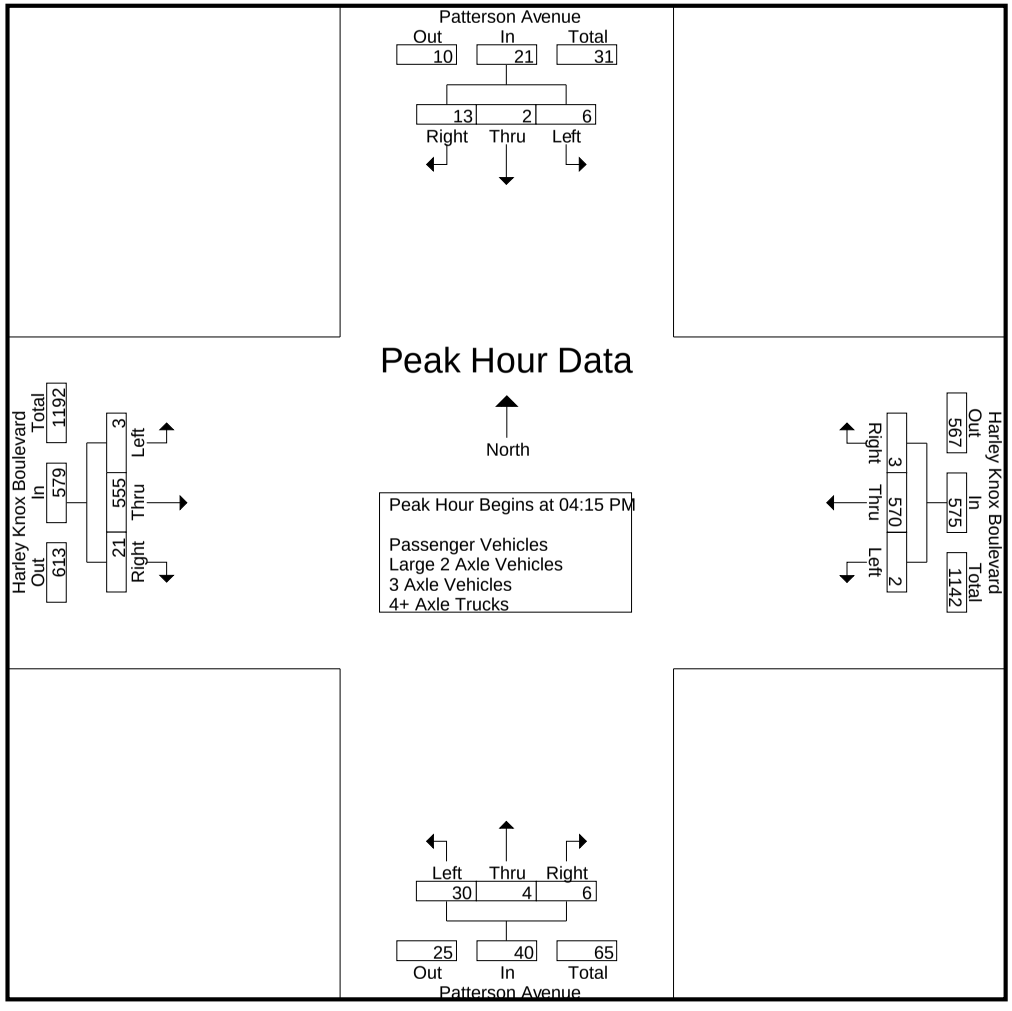

Counts Unlimited
PO Box 1178
Corona, CA 92878
(951) 268-6268

City of Perris
N/S: Patterson Avenue
E/W: Harley Knox Boulevard
Weather: Clear

File Name : PERPAHAPM
Site Code : 05115699
Start Date : 12/16/2015
Page No : 3

	Patterson Avenue Southbound				Harley Knox Boulevard Westbound				Patterson Avenue Northbound				Harley Knox Boulevard Eastbound				
Start Time	Left	Thru	Right	App. Total	Left	Thru	Right	App. Total	Left	Thru	Right	App. Total	Left	Thru	Right	App. Total	Int. Total
Peak Hour Analysis From 04:00 PM to 05:45 PM - Peak 1 of 1																	
Peak Hour for Each Approach Begins at:																	
	04:15 PM				04:15 PM				04:00 PM				04:00 PM				
+0 mins.	1	0	3	4	**2**	93	0	95	**9**	0	2	11	0	112	**9**	121	
+15 mins.	**3**	**1**	**5**	**9**	0	150	**2**	152	9	**2**	**3**	**14**	**1**	137	8	146	
+30 mins.	1	0	2	3	0	**208**	0	**208**	8	0	2	10	1	**181**	3	**185**	
+45 mins.	1	1	3	5	0	119	1	120	5	0	0	5	1	121	9	131	
Total Volume	6	2	13	21	2	570	3	575	31	2	7	40	3	551	29	583	
% App. Total	28.6	9.5	61.9		0.3	99.1	0.5		77.5	5	17.5		0.5	94.5	5		
PHF	.500	.500	.650	.583	.250	.685	.375	.691	.861	.250	.583	.714	.750	.761	.806	.788	

Counts Unlimited
PO Box 1178
Corona, CA 92878
(951) 268-6268

City of Perris
N/S: Patterson Avenue
E/W: Harley Knox Boulevard
Weather: Clear

File Name : PERPAHAPM
Site Code : 05115699
Start Date : 12/16/2015
Page No : 1

Groups Printed- Passenger Vehicles

	Patterson Avenue Southbound					Harley Knox Boulevard Westbound					Patterson Avenue Northbound					Harley Knox Boulevard Eastbound							
Start Time	Left	Thru	Right	RTOR	App. Total	Left	Thru	Right	RTOR	App. Total	Left	Thru	Right	RTOR	App. Total	Left	Thru	Right	RTOR	App. Total	Exclu. Total	Inclu. Total	Int. Total
04:00 PM	1	0	0	0	1	3	101	0	0	104	8	0	2	1	10	0	101	8	0	109	1	224	225
04:15 PM	1	0	3	2	4	2	75	0	0	77	9	2	3	2	14	1	121	7	0	129	4	224	228
04:30 PM	3	1	5	4	9	0	133	2	0	135	6	0	2	2	8	1	157	3	0	161	6	313	319
04:45 PM	1	0	2	0	3	0	193	0	0	193	5	0	0	0	5	1	108	8	0	117	0	318	318
Total	6	1	10	6	17	5	502	2	0	509	28	2	7	5	37	3	487	26	0	516	11	1079	1090
05:00 PM	1	1	3	0	5	0	113	1	1	114	8	2	1	0	11	0	102	1	0	103	1	233	234
05:15 PM	0	0	0	0	0	1	79	1	0	81	5	0	1	0	6	2	91	13	0	106	0	193	193
05:30 PM	4	0	2	0	6	0	116	0	0	116	6	2	0	0	8	0	137	11	0	148	0	278	278
05:45 PM	1	0	1	0	2	0	128	0	0	128	6	0	2	2	8	0	150	6	0	156	2	294	296
Total	6	1	6	0	13	1	436	2	1	439	25	4	4	2	33	2	480	31	0	513	3	998	1001
Grand Total	12	2	16	6	30	6	938	4	1	948	53	6	11	7	70	5	967	57	0	1029	14	2077	2091
Apprch %	40	6.7	53.3			0.6	98.9	0.4			75.7	8.6	15.7			0.5	94	5.5					
Total %	0.6	0.1	0.8		1.4	0.3	45.2	0.2		45.6	2.6	0.3	0.5		3.4	0.2	46.6	2.7		49.5	0.7	99.3	

	Patterson Avenue Southbound				Harley Knox Boulevard Westbound				Patterson Avenue Northbound				Harley Knox Boulevard Eastbound				
Start Time	Left	Thru	Right	App. Total	Left	Thru	Right	App. Total	Left	Thru	Right	App. Total	Left	Thru	Right	App. Total	Int. Total
Peak Hour Analysis From 04:15 PM to 05:00 PM - Peak 1 of 1																	
Peak Hour for Entire Intersection Begins at 04:15 PM																	
04:15 PM	1	0	3	4	**2**	75	0	77	**9**	**2**	**3**	**14**	**1**	121	7	129	224
04:30 PM	**3**	**1**	**5**	**9**	0	133	**2**	135	6	0	2	8	1	**157**	3	**161**	313
04:45 PM	1	0	2	3	0	**193**	0	**193**	5	0	0	5	1	108	**8**	117	**318**
05:00 PM	1	1	3	5	0	113	1	114	8	2	1	11	0	102	1	103	233
Total Volume	6	2	13	21	2	514	3	519	28	4	6	38	3	488	19	510	1088
% App. Total	28.6	9.5	61.9		0.4	99	0.6		73.7	10.5	15.8		0.6	95.7	3.7		
PHF	.500	.500	.650	.583	.250	.666	.375	.672	.778	.500	.500	.679	.750	.777	.594	.792	.855

Counts Unlimited
PO Box 1178
Corona, CA 92878
(951) 268-6268

City of Perris
N/S: Patterson Avenue
E/W: Harley Knox Boulevard
Weather: Clear

File Name : PERPAHAPM
Site Code : 05115699
Start Date : 12/16/2015
Page No : 2

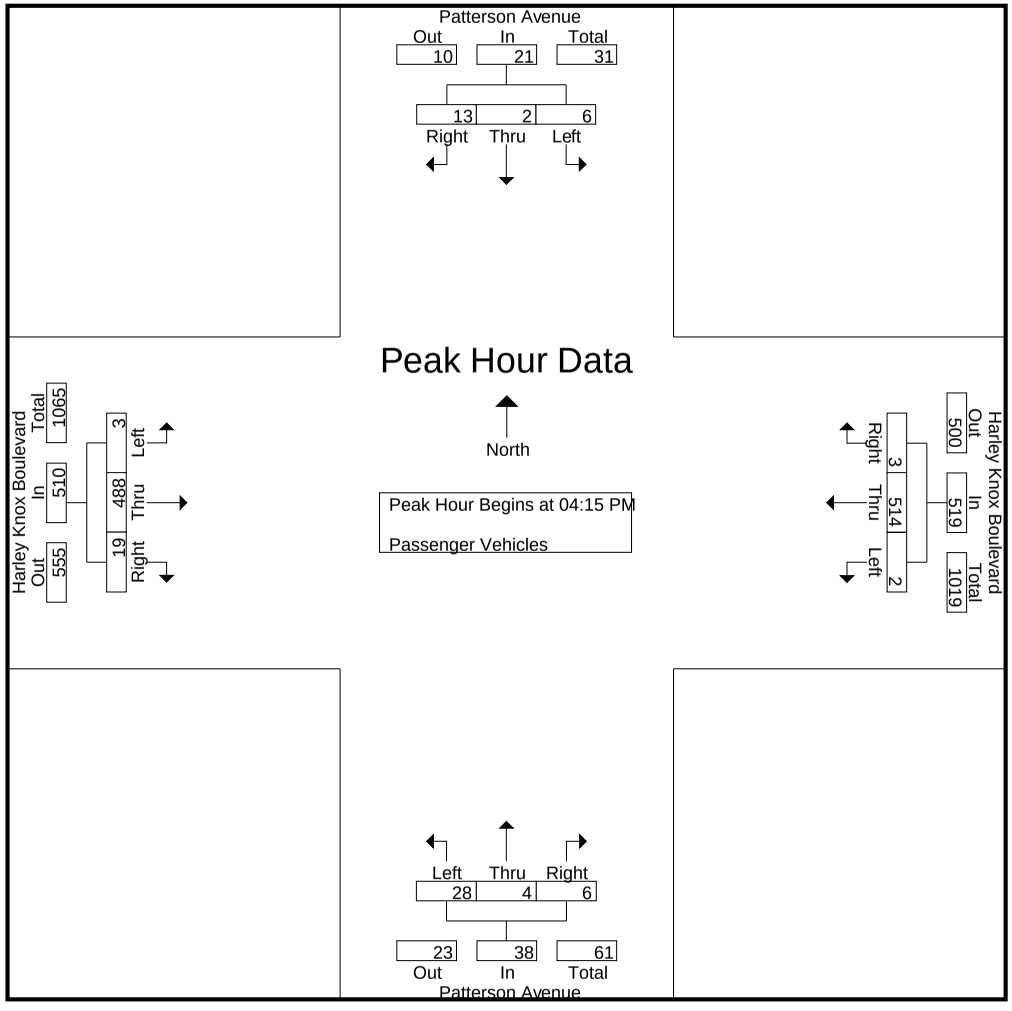

Counts Unlimited
PO Box 1178
Corona, CA 92878
(951) 268-6268

City of Perris
N/S: Patterson Avenue
E/W: Harley Knox Boulevard
Weather: Clear

File Name : PERPAHAPM
Site Code : 05115699
Start Date : 12/16/2015
Page No : 3

	Patterson Avenue Southbound				Harley Knox Boulevard Westbound				Patterson Avenue Northbound				Harley Knox Boulevard Eastbound				
Start Time	Left	Thru	Right	App. Total	Left	Thru	Right	App. Total	Left	Thru	Right	App. Total	Left	Thru	Right	App. Total	Int. Total
Peak Hour Analysis From 04:15 PM to 05:00 PM - Peak 1 of 1																	
Peak Hour for Each Approach Begins at:																	
	04:15 PM				04:15 PM				04:15 PM				04:15 PM				
+0 mins.	1	0	3	4	**2**	75	0	77	**9**	**2**	**3**	**14**	**1**	121	7	129	
+15 mins.	**3**	**1**	**5**	**9**	0	133	**2**	135	6	0	2	8	1	**157**	3	**161**	
+30 mins.	1	0	2	3	0	**193**	0	**193**	5	0	0	5	1	108	**8**	117	
+45 mins.	1	1	3	5	0	113	1	114	8	2	1	11	0	102	1	103	
Total Volume	6	2	13	21	2	514	3	519	28	4	6	38	3	488	19	510	
% App. Total	28.6	9.5	61.9		0.4	99	0.6		73.7	10.5	15.8		0.6	95.7	3.7		
PHF	.500	.500	.650	.583	.250	.666	.375	.672	.778	.500	.500	.679	.750	.777	.594	.792	

Counts Unlimited
PO Box 1178
Corona, CA 92878
(951) 268-6268

City of Perris
N/S: Patterson Avenue
E/W: Harley Knox Boulevard
Weather: Clear

File Name : PERPAHAPM
Site Code : 05115699
Start Date : 12/16/2015
Page No : 1

Groups Printed- Large 2 Axle Vehicles

	Patterson Avenue Southbound					Harley Knox Boulevard Westbound					Patterson Avenue Northbound					Harley Knox Boulevard Eastbound							
Start Time	Left	Thru	Right	RTOR	App. Total	Left	Thru	Right	RTOR	App. Total	Left	Thru	Right	RTOR	App. Total	Left	Thru	Right	RTOR	App. Total	Exclu. Total	Inclu. Total	Int. Total
04:00 PM	0	0	0	0	0	0	0	0	0	0	1	0	0	0	1	0	3	1	0	4	0	5	5
04:15 PM	0	0	0	0	0	0	0	0	0	0	0	0	0	0	0	0	4	0	0	4	0	4	4
04:30 PM	0	0	0	0	0	0	3	0	0	3	1	0	0	0	1	0	1	0	0	1	0	5	5
04:45 PM	0	0	0	0	0	0	2	0	0	2	0	0	0	0	0	0	0	1	0	1	0	3	3
Total	0	0	0	0	0	0	5	0	0	5	2	0	0	0	2	0	8	2	0	10	0	17	17
05:00 PM	0	0	0	0	0	0	0	0	0	0	0	0	0	0	0	0	2	0	0	2	0	2	2
05:15 PM	0	0	0	0	0	0	0	0	0	0	1	0	0	0	1	0	0	1	0	1	0	2	2
05:30 PM	0	0	0	0	0	0	1	0	0	1	0	0	0	0	0	0	1	1	0	2	0	3	3
05:45 PM	0	0	0	0	0	0	2	0	0	2	0	0	0	0	0	0	3	2	0	5	0	7	7
Total	0	0	0	0	0	0	3	0	0	3	1	0	0	0	1	0	6	4	0	10	0	14	14
Grand Total	0	0	0	0	0	0	8	0	0	8	3	0	0	0	3	0	14	6	0	20	0	31	31
Apprch %	0	0	0			0	100	0			100	0	0			0	70	30					
Total %	0	0	0		0	0	25.8	0		25.8	9.7	0	0		9.7	0	45.2	19.4		64.5	0	100	

	Patterson Avenue Southbound				Harley Knox Boulevard Westbound				Patterson Avenue Northbound				Harley Knox Boulevard Eastbound				
Start Time	Left	Thru	Right	App. Total	Left	Thru	Right	App. Total	Left	Thru	Right	App. Total	Left	Thru	Right	App. Total	Int. Total
Peak Hour Analysis From 04:15 PM to 05:00 PM - Peak 1 of 1																	
Peak Hour for Entire Intersection Begins at 04:15 PM																	
04:15 PM	0	0	0	0	0	0	0	0	0	0	0	0	0	**4**	0	**4**	4
04:30 PM	0	0	0	0	0	**3**	0	**3**	**1**	0	0	**1**	0	1	0	1	**5**
04:45 PM	0	0	0	0	0	2	0	2	0	0	0	0	0	0	**1**	1	3
05:00 PM	0	0	0	0	0	0	0	0	0	0	0	0	0	2	0	2	2
Total Volume	0	0	0	0	0	5	0	5	1	0	0	1	0	7	1	8	14
% App. Total	0	0	0		0	100	0		100	0	0		0	87.5	12.5		
PHF	.000	.000	.000	.000	.000	.417	.000	.417	.250	.000	.000	.250	.000	.438	.250	.500	.700

Counts Unlimited
PO Box 1178
Corona, CA 92878
(951) 268-6268

City of Perris
N/S: Patterson Avenue
E/W: Harley Knox Boulevard
Weather: Clear

File Name : PERPAHAPM
Site Code : 05115699
Start Date : 12/16/2015
Page No : 2

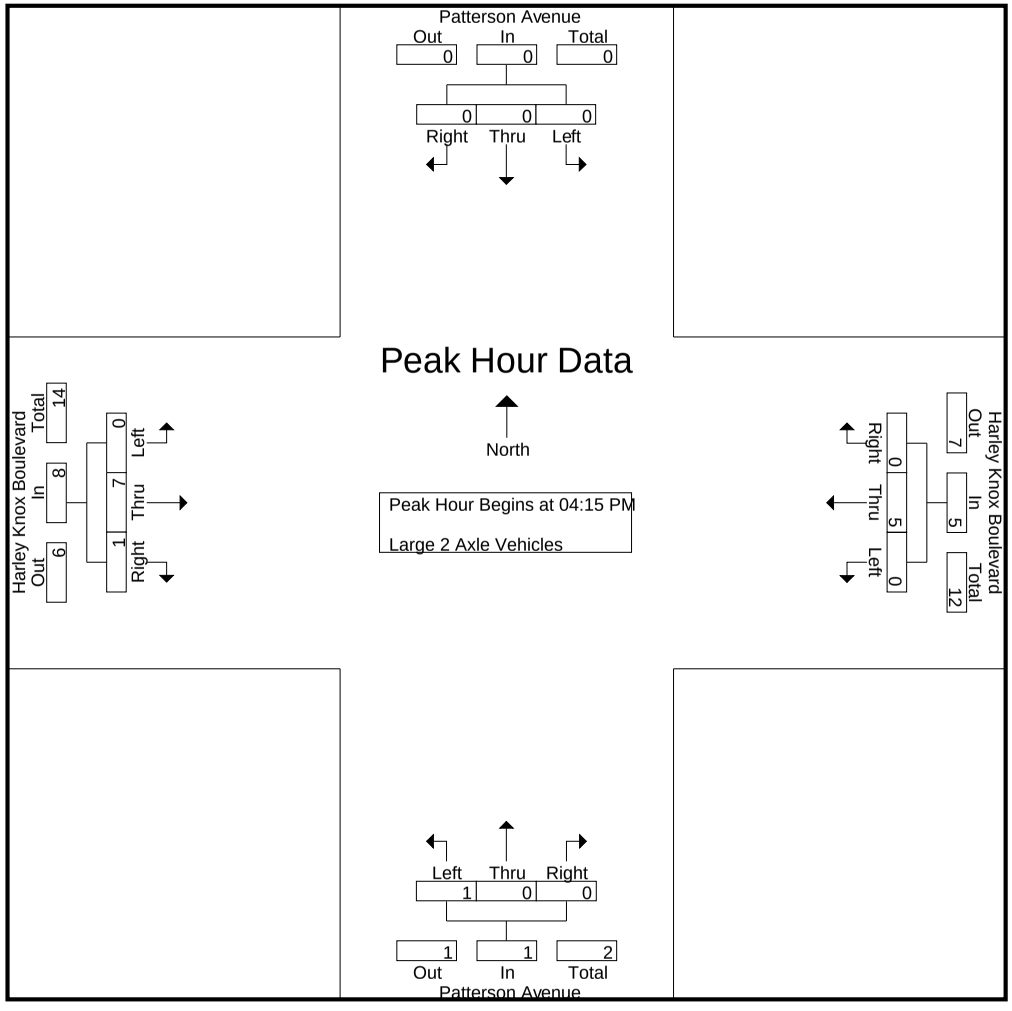

Counts Unlimited
PO Box 1178
Corona, CA 92878
(951) 268-6268

City of Perris
N/S: Patterson Avenue
E/W: Harley Knox Boulevard
Weather: Clear

File Name : PERPAHAPM
Site Code : 05115699
Start Date : 12/16/2015
Page No : 3

	Patterson Avenue Southbound				Harley Knox Boulevard Westbound				Patterson Avenue Northbound				Harley Knox Boulevard Eastbound				
Start Time	Left	Thru	Right	App. Total	Left	Thru	Right	App. Total	Left	Thru	Right	App. Total	Left	Thru	Right	App. Total	Int. Total
Peak Hour Analysis From 04:15 PM to 05:00 PM - Peak 1 of 1																	
Peak Hour for Each Approach Begins at:																	
	04:15 PM				04:15 PM				04:15 PM				04:15 PM				
+0 mins.	0	0	0	0	0	0	0	0	0	0	0	0	0	**4**	0	**4**	
+15 mins.	0	0	0	0	0	**3**	0	**3**	**1**	0	0	**1**	0	1	0	1	
+30 mins.	0	0	0	0	0	2	0	2	0	0	0	0	0	0	**1**	1	
+45 mins.	0	0	0	0	0	0	0	0	0	0	0	0	0	2	0	2	
Total Volume	0	0	0	0	0	5	0	5	1	0	0	1	0	7	1	8	
% App. Total	0	0	0		0	100	0		100	0	0		0	87.5	12.5		
PHF	.000	.000	.000	.000	.000	.417	.000	.417	.250	.000	.000	.250	.000	.438	.250	.500	

Counts Unlimited
PO Box 1178
Corona, CA 92878
(951) 268-6268

City of Perris
N/S: Patterson Avenue
E/W: Harley Knox Boulevard
Weather: Clear

File Name : PERPAHAPM
Site Code : 05115699
Start Date : 12/16/2015
Page No : 1

Groups Printed- 3 Axle Vehicles

	Patterson Avenue Southbound					Harley Knox Boulevard Westbound					Patterson Avenue Northbound					Harley Knox Boulevard Eastbound							
Start Time	Left	Thru	Right	RTOR	App. Total	Left	Thru	Right	RTOR	App. Total	Left	Thru	Right	RTOR	App. Total	Left	Thru	Right	RTOR	App. Total	Exclu. Total	Inclu. Total	Int. Total
04:00 PM	0	0	0	0	0	0	2	0	0	2	0	0	0	0	0	0	3	0	0	3	0	5	5
04:15 PM	0	0	0	0	0	0	3	0	0	3	0	0	0	0	0	0	6	0	0	6	0	9	9
04:30 PM	0	0	0	0	0	0	4	0	0	4	0	0	0	0	0	0	10	0	0	10	0	14	14
04:45 PM	0	0	0	0	0	0	2	0	0	2	0	0	0	0	0	0	3	0	0	3	0	5	5
Total	0	0	0	0	0	0	11	0	0	11	0	0	0	0	0	0	22	0	0	22	0	33	33
05:00 PM	0	0	0	0	0	0	1	0	0	1	0	0	0	0	0	0	9	0	0	9	0	10	10
05:15 PM	0	0	0	0	0	0	1	0	0	1	0	0	0	0	0	0	2	0	0	2	0	3	3
05:30 PM	0	0	0	0	0	0	4	0	0	4	0	0	0	0	0	0	3	0	0	3	0	7	7
05:45 PM	0	0	0	0	0	0	0	0	0	0	0	0	0	0	0	0	7	0	0	7	0	7	7
Total	0	0	0	0	0	0	6	0	0	6	0	0	0	0	0	0	21	0	0	21	0	27	27
Grand Total	0	0	0	0	0	0	17	0	0	17	0	0	0	0	0	0	43	0	0	43	0	60	60
Apprch %	0	0	0			0	100	0			0	0	0			0	100	0					
Total %	0	0	0		0	0	28.3	0		28.3	0	0	0		0	0	71.7	0		71.7	0	100	

	Patterson Avenue Southbound				Harley Knox Boulevard Westbound				Patterson Avenue Northbound				Harley Knox Boulevard Eastbound				
Start Time	Left	Thru	Right	App. Total	Left	Thru	Right	App. Total	Left	Thru	Right	App. Total	Left	Thru	Right	App. Total	Int. Total
Peak Hour Analysis From 04:15 PM to 05:00 PM - Peak 1 of 1																	
Peak Hour for Entire Intersection Begins at 04:15 PM																	
04:15 PM	0	0	0	0	0	3	0	3	0	0	0	0	0	6	0	6	9
04:30 PM	0	0	0	0	0	**4**	0	**4**	0	0	0	0	0	**10**	0	**10**	**14**
04:45 PM	0	0	0	0	0	2	0	2	0	0	0	0	0	3	0	3	5
05:00 PM	0	0	0	0	0	1	0	1	0	0	0	0	0	9	0	9	10
Total Volume	0	0	0	0	0	10	0	10	0	0	0	0	0	28	0	28	38
% App. Total	0	0	0		0	100	0		0	0	0		0	100	0		
PHF	.000	.000	.000	.000	.000	.625	.000	.625	.000	.000	.000	.000	.000	.700	.000	.700	.679

Counts Unlimited
PO Box 1178
Corona, CA 92878
(951) 268-6268

City of Perris
N/S: Patterson Avenue
E/W: Harley Knox Boulevard
Weather: Clear

File Name : PERPAHAPM
Site Code : 05115699
Start Date : 12/16/2015
Page No : 2

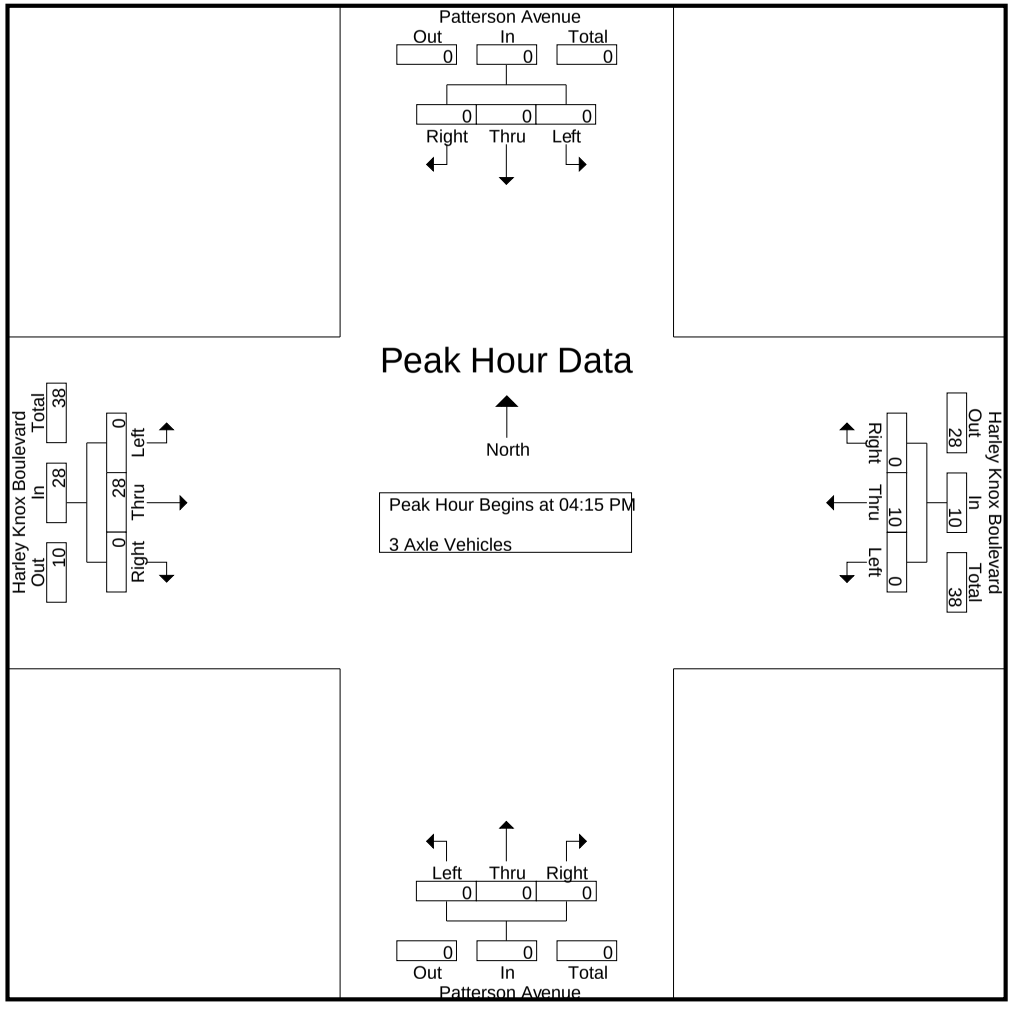

Counts Unlimited
PO Box 1178
Corona, CA 92878
(951) 268-6268

City of Perris
N/S: Patterson Avenue
E/W: Harley Knox Boulevard
Weather: Clear

File Name : PERPAHAPM
Site Code : 05115699
Start Date : 12/16/2015
Page No : 3

	Patterson Avenue Southbound				Harley Knox Boulevard Westbound				Patterson Avenue Northbound				Harley Knox Boulevard Eastbound				
Start Time	Left	Thru	Right	App. Total	Left	Thru	Right	App. Total	Left	Thru	Right	App. Total	Left	Thru	Right	App. Total	Int. Total
Peak Hour Analysis From 04:15 PM to 05:00 PM - Peak 1 of 1																	
Peak Hour for Each Approach Begins at:																	
	04:15 PM				04:15 PM				04:15 PM				04:15 PM				
+0 mins.	0	0	0	0	0	3	0	3	0	0	0	0	0	6	0	6	
+15 mins.	0	0	0	0	0	**4**	0	**4**	0	0	0	0	0	**10**	0	**10**	
+30 mins.	0	0	0	0	0	2	0	2	0	0	0	0	0	3	0	3	
+45 mins.	0	0	0	0	0	1	0	1	0	0	0	0	0	9	0	9	
Total Volume	0	0	0	0	0	10	0	10	0	0	0	0	0	28	0	28	
% App. Total	0	0	0		0	100	0		0	0	0		0	100	0		
PHF	.000	.000	.000	.000	.000	.625	.000	.625	.000	.000	.000	.000	.000	.700	.000	.700	

Counts Unlimited
PO Box 1178
Corona, CA 92878
(951) 268-6268

City of Perris
N/S: Patterson Avenue
E/W: Harley Knox Boulevard
Weather: Clear

File Name : PERPAHAPM
Site Code : 05115699
Start Date : 12/16/2015
Page No : 1

Groups Printed- 4+ Axle Trucks

	Patterson Avenue Southbound					Harley Knox Boulevard Westbound					Patterson Avenue Northbound					Harley Knox Boulevard Eastbound							
Start Time	Left	Thru	Right	RTOR	App. Total	Left	Thru	Right	RTOR	App. Total	Left	Thru	Right	RTOR	App. Total	Left	Thru	Right	RTOR	App. Total	Exclu. Total	Inclu. Total	Int. Total
04:00 PM	0	0	0	0	0	0	8	0	0	8	0	0	0	0	0	0	5	0	0	5	0	13	13
04:15 PM	0	0	0	0	0	0	15	0	0	15	0	0	0	0	0	0	6	1	0	7	0	22	22
04:30 PM	0	0	0	0	0	0	10	0	0	10	1	0	0	0	1	0	13	0	0	13	0	24	24
04:45 PM	0	0	0	0	0	0	11	0	0	11	0	0	0	0	0	0	10	0	0	10	0	21	21
Total	0	0	0	0	0	0	44	0	0	44	1	0	0	0	1	0	34	1	0	35	0	80	80
05:00 PM	0	0	0	0	0	0	5	0	0	5	0	0	0	0	0	0	3	0	0	3	0	8	8
05:15 PM	0	0	0	0	0	0	6	0	0	6	0	0	0	0	0	0	6	0	0	6	0	12	12
05:30 PM	0	0	0	0	0	0	10	0	0	10	0	0	0	0	0	0	4	0	0	4	0	14	14
05:45 PM	0	0	0	0	0	0	9	0	0	9	1	0	0	0	1	0	1	0	0	1	0	11	11
Total	0	0	0	0	0	0	30	0	0	30	1	0	0	0	1	0	14	0	0	14	0	45	45
Grand Total	0	0	0	0	0	0	74	0	0	74	2	0	0	0	2	0	48	1	0	49	0	125	125
Apprch %	0	0	0			0	100	0			100	0	0			0	98	2					
Total %	0	0	0		0	0	59.2	0		59.2	1.6	0	0		1.6	0	38.4	0.8		39.2	0	100	

	Patterson Avenue Southbound				Harley Knox Boulevard Westbound				Patterson Avenue Northbound				Harley Knox Boulevard Eastbound				
Start Time	Left	Thru	Right	App. Total	Left	Thru	Right	App. Total	Left	Thru	Right	App. Total	Left	Thru	Right	App. Total	Int. Total
Peak Hour Analysis From 04:15 PM to 05:00 PM - Peak 1 of 1																	
Peak Hour for Entire Intersection Begins at 04:15 PM																	
04:15 PM	0	0	0	0	0	**15**	0	**15**	0	0	0	0	0	6	**1**	7	22
04:30 PM	0	0	0	0	0	10	0	10	**1**	0	0	**1**	0	**13**	0	**13**	**24**
04:45 PM	0	0	0	0	0	11	0	11	0	0	0	0	0	10	0	10	21
05:00 PM	0	0	0	0	0	5	0	5	0	0	0	0	0	3	0	3	8
Total Volume	0	0	0	0	0	41	0	41	1	0	0	1	0	32	1	33	75
% App. Total	0	0	0		0	100	0		100	0	0		0	97	3		
PHF	.000	.000	.000	.000	.000	.683	.000	.683	.250	.000	.000	.250	.000	.615	.250	.635	.781

Counts Unlimited
PO Box 1178
Corona, CA 92878
(951) 268-6268

City of Perris
N/S: Patterson Avenue
E/W: Harley Knox Boulevard
Weather: Clear

File Name : PERPAHAPM
Site Code : 05115699
Start Date : 12/16/2015
Page No : 2

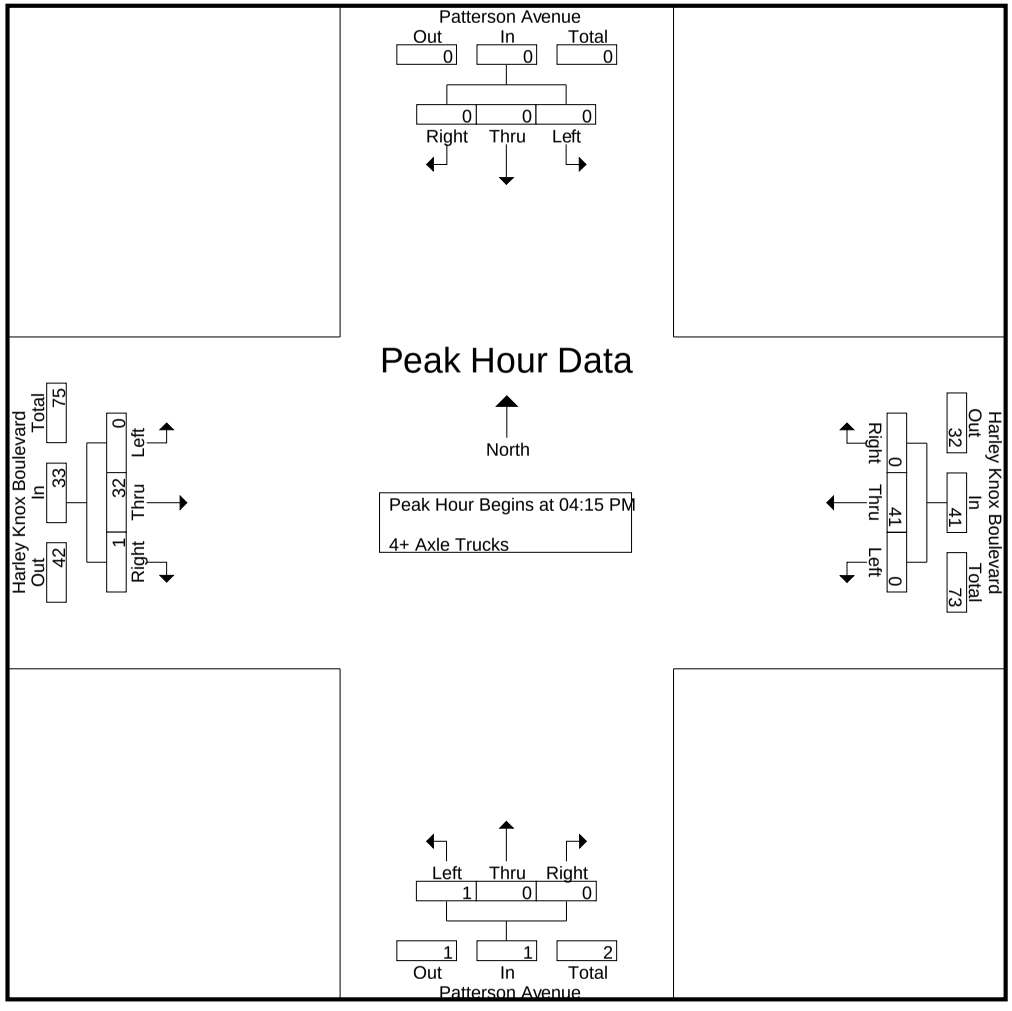

Counts Unlimited
PO Box 1178
Corona, CA 92878
(951) 268-6268

City of Perris
N/S: Patterson Avenue
E/W: Harley Knox Boulevard
Weather: Clear

File Name : PERPAHAPM
Site Code : 05115699
Start Date : 12/16/2015
Page No : 3

	Patterson Avenue Southbound				Harley Knox Boulevard Westbound				Patterson Avenue Northbound				Harley Knox Boulevard Eastbound				
Start Time	Left	Thru	Right	App. Total	Left	Thru	Right	App. Total	Left	Thru	Right	App. Total	Left	Thru	Right	App. Total	Int. Total
Peak Hour Analysis From 04:15 PM to 05:00 PM - Peak 1 of 1																	
Peak Hour for Each Approach Begins at:																	
	04:15 PM				04:15 PM				04:15 PM				04:15 PM				
+0 mins.	0	0	0	0	0	**15**	0	**15**	0	0	0	0	0	6	**1**	7	
+15 mins.	0	0	0	0	0	10	0	10	**1**	0	0	**1**	0	**13**	0	**13**	
+30 mins.	0	0	0	0	0	11	0	11	0	0	0	0	0	10	0	10	
+45 mins.	0	0	0	0	0	5	0	5	0	0	0	0	0	3	0	3	
Total Volume	0	0	0	0	0	41	0	41	1	0	0	1	0	32	1	33	
% App. Total	0	0	0		0	100	0		100	0	0		0	97	3		
PHF	.000	.000	.000	.000	.000	.683	.000	.683	.250	.000	.000	.250	.000	.615	.250	.635	

Location: Perris
N/S: Patterson Avenue
E/W: Harley Knox Boulevard

Site Code: 051-15699
Date: 12/16/2015
Weather: Clear

PEDESTRIANS

	North Leg Patterson Avenue	East Leg Harley Knox Boulevard	South Leg Patterson Avenue	West Leg Harley Knox Boulevard	TOTAL
7:00 AM	0	0	0	0	0
7:15 AM	0	0	0	0	0
7:30 AM	0	0	0	0	0
7:45 AM	0	0	0	0	0
8:00 AM	0	0	0	0	0
8:15 AM	0	0	0	0	0
8:30 AM	0	0	0	0	0
8:45 AM	0	0	0	0	0
TOTAL VOLUMES:	0	0	0	0	0

	North Leg Patterson Avenue	East Leg Harley Knox Boulevard	South Leg Patterson Avenue	West Leg Harley Knox Boulevard	TOTAL
4:00 PM	0	0	0	0	0
4:15 PM	0	0	0	0	0
4:30 PM	0	0	0	0	0
4:45 PM	0	0	0	0	0
5:00 PM	0	0	0	0	0
5:15 PM	0	0	0	0	0
5:30 PM	0	0	0	0	0
5:45 PM	0	0	0	0	0
TOTAL VOLUMES:	0	0	0	0	0

Counts Unlimited, Inc.
PO Box 1178
Corona, CA 92878
951-268-6268

Location: Perris
N/S: Patterson Avenue
E/W: Harley Knox Boulevard

Site Code: 051-15699
Date: 12/16/2015
Weather: Clear

BICYCLES

	North Leg Patterson Avenue	East Leg Harley Knox Boulevard	South Leg Patterson Avenue	West Leg Harley Knox Boulevard	TOTAL
7:00 AM	0	0	0	0	0
7:15 AM	0	0	0	0	0
7:30 AM	0	0	0	0	0
7:45 AM	0	0	0	0	0
8:00 AM	0	0	0	0	0
8:15 AM	0	0	0	0	0
8:30 AM	0	0	0	0	0
8:45 AM	0	0	0	0	0
TOTAL VOLUMES:	0	0	0	0	0

	North Leg Patterson Avenue	East Leg Harley Knox Boulevard	South Leg Patterson Avenue	West Leg Harley Knox Boulevard	TOTAL
4:00 PM	0	0	0	0	0
4:15 PM	0	0	0	0	0
4:30 PM	0	0	0	0	0
4:45 PM	0	0	0	0	0
5:00 PM	0	0	0	0	0
5:15 PM	0	0	0	0	0
5:30 PM	0	0	0	0	0
5:45 PM	0	0	0	0	0
TOTAL VOLUMES:	0	0	0	0	0

Counts Unlimited, Inc.
PO Box 1178
Corona, CA 92878
951-268-6268

Counts Unlimited
PO Box 1178
Corona, CA 92878
(951) 268-6268

City of Perris
N/S: Webster Avenue
E/W: Harley Knox Boulevard
Weather: Clear

File Name : PERWBHAAM
Site Code : 05115699
Start Date : 12/16/2015
Page No : 1

Groups Printed- Passenger Vehicles - Large 2 Axle Vehicles - 3 Axle Vehicles - 4+ Axle Trucks

	Harley Knox Boulevard Westbound			Webster Avenue Northbound			Harley Knox Boulevard Eastbound			
Start Time	Left	Thru	App. Total	Left	Right	App. Total	Thru	Right	App. Total	Int. Total
07:00 AM	0	222	222	0	1	1	106	0	106	329
07:15 AM	0	156	156	0	0	0	108	2	110	266
07:30 AM	0	138	138	0	1	1	124	0	124	263
07:45 AM	0	132	132	0	1	1	137	0	137	270
Total	0	648	648	0	3	3	475	2	477	1128
08:00 AM	0	104	104	0	0	0	105	1	106	210
08:15 AM	0	74	74	0	0	0	56	1	57	131
08:30 AM	0	67	67	0	0	0	68	2	70	137
08:45 AM	0	68	68	0	0	0	55	0	55	123
Total	0	313	313	0	0	0	284	4	288	601
Grand Total	0	961	961	0	3	3	759	6	765	1729
Apprch %	0	100		0	100		99.2	0.8		
Total %	0	55.6	55.6	0	0.2	0.2	43.9	0.3	44.2	
Passenger Vehicles	0	843	843	0	3	3	649	5	654	1500
% Passenger Vehicles	0	87.7	87.7	0	100	100	85.5	83.3	85.5	86.8
Large 2 Axle Vehicles	0	24	24	0	0	0	26	1	27	51
% Large 2 Axle Vehicles	0	2.5	2.5	0	0	0	3.4	16.7	3.5	2.9
3 Axle Vehicles	0	26	26	0	0	0	26	0	26	52
% 3 Axle Vehicles	0	2.7	2.7	0	0	0	3.4	0	3.4	3
4+ Axle Trucks	0	68	68	0	0	0	58	0	58	126
% 4+ Axle Trucks	0	7.1	7.1	0	0	0	7.6	0	7.6	7.3

	Harley Knox Boulevard Westbound			Webster Avenue Northbound			Harley Knox Boulevard Eastbound			
Start Time	Left	Thru	App. Total	Left	Right	App. Total	Thru	Right	App. Total	Int. Total
Peak Hour Analysis From 07:00 AM to 08:45 AM - Peak 1 of 1										
Peak Hour for Entire Intersection Begins at 07:00 AM										
07:00 AM	0	**222**	**222**	0	**1**	**1**	106	0	106	**329**
07:15 AM	0	156	156	0	0	0	108	**2**	110	266
07:30 AM	0	138	138	0	1	1	124	0	124	263
07:45 AM	0	132	132	0	1	1	**137**	0	**137**	270
Total Volume	0	648	648	0	3	3	475	2	477	1128
% App. Total	0	100		0	100		99.6	0.4		
PHF	.000	.730	.730	.000	.750	.750	.867	.250	.870	.857

Counts Unlimited
PO Box 1178
Corona, CA 92878
(951) 268-6268

City of Perris
N/S: Webster Avenue
E/W: Harley Knox Boulevard
Weather: Clear

File Name : PERWBHAAM
Site Code : 05115699
Start Date : 12/16/2015
Page No : 2

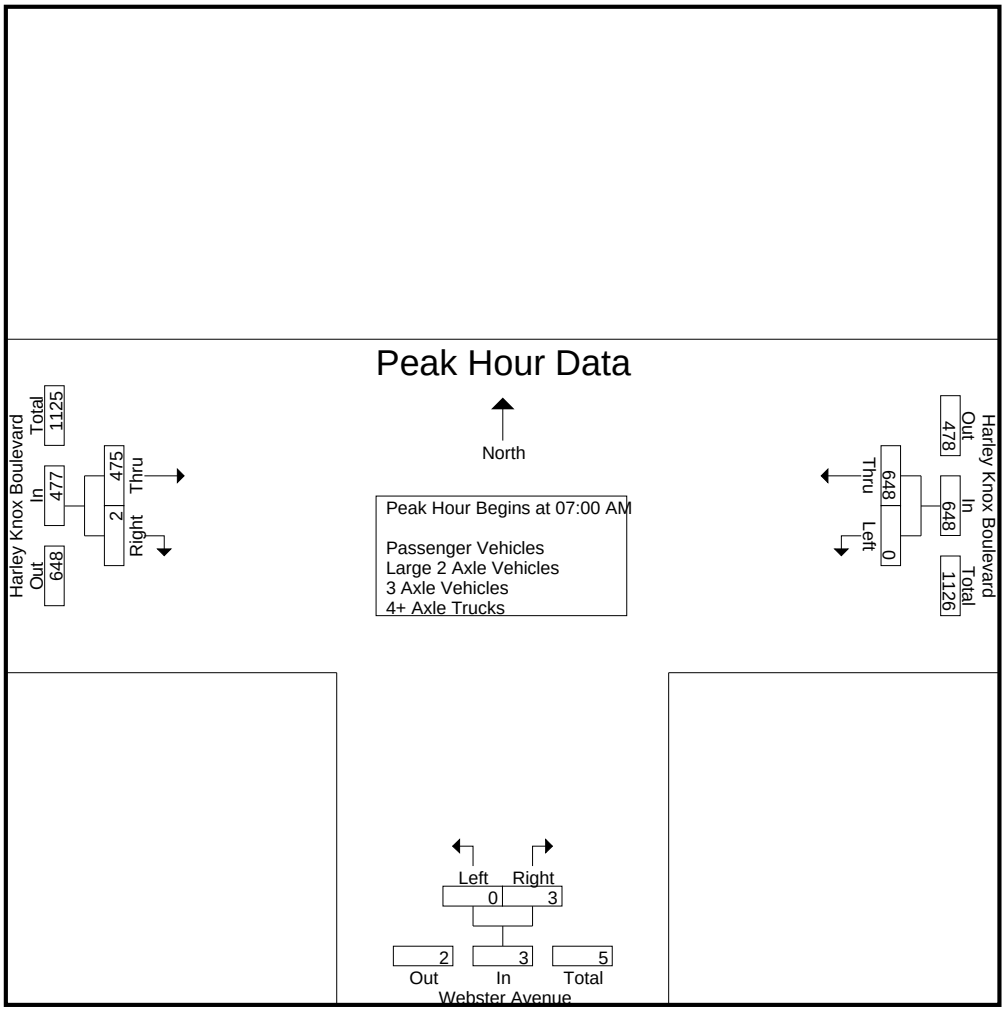

Peak Hour Analysis From 07:00 AM to 08:45 AM - Peak 1 of 1
Peak Hour for Each Approach Begins at:

	07:00 AM			07:00 AM			07:00 AM		
+0 mins.	0	**222**	**222**	0	**1**	**1**	106	0	106
+15 mins.	0	156	156	0	0	0	108	**2**	110
+30 mins.	0	138	138	0	1	1	124	0	124
+45 mins.	0	132	132	0	1	1	**137**	0	**137**
Total Volume	0	648	648	0	3	3	475	2	477
% App. Total	0	100		0	100		99.6	0.4	
PHF	.000	.730	.730	.000	.750	.750	.867	.250	.870

Counts Unlimited
PO Box 1178
Corona, CA 92878
(951) 268-6268

City of Perris
N/S: Webster Avenue
E/W: Harley Knox Boulevard
Weather: Clear

File Name : PERWBHAAM
Site Code : 05115699
Start Date : 12/16/2015
Page No : 1

Groups Printed- Passenger Vehicles

	Harley Knox Boulevard Westbound			Webster Avenue Northbound			Harley Knox Boulevard Eastbound			
Start Time	Left	Thru	App. Total	Left	Right	App. Total	Thru	Right	App. Total	Int. Total
07:00 AM	0	213	213	0	1	1	89	0	89	303
07:15 AM	0	145	145	0	0	0	92	2	94	239
07:30 AM	0	121	121	0	1	1	111	0	111	233
07:45 AM	0	118	118	0	1	1	127	0	127	246
Total	0	597	597	0	3	3	419	2	421	1021
08:00 AM	0	83	83	0	0	0	93	1	94	177
08:15 AM	0	59	59	0	0	0	42	1	43	102
08:30 AM	0	53	53	0	0	0	54	1	55	108
08:45 AM	0	51	51	0	0	0	41	0	41	92
Total	0	246	246	0	0	0	230	3	233	479
Grand Total	0	843	843	0	3	3	649	5	654	1500
Apprch %	0	100		0	100		99.2	0.8		
Total %	0	56.2	56.2	0	0.2	0.2	43.3	0.3	43.6	

	Harley Knox Boulevard Westbound			Webster Avenue Northbound			Harley Knox Boulevard Eastbound			
Start Time	Left	Thru	App. Total	Left	Right	App. Total	Thru	Right	App. Total	Int. Total
Peak Hour Analysis From 07:00 AM to 07:45 AM - Peak 1 of 1										
Peak Hour for Entire Intersection Begins at 07:00 AM										
07:00 AM	0	**213**	**213**	0	**1**	**1**	89	0	89	**303**
07:15 AM	0	145	145	0	0	0	92	**2**	94	239
07:30 AM	0	121	121	0	1	1	111	0	111	233
07:45 AM	0	118	118	0	1	1	**127**	0	**127**	246
Total Volume	0	597	597	0	3	3	419	2	421	1021
% App. Total	0	100		0	100		99.5	0.5		
PHF	.000	.701	.701	.000	.750	.750	.825	.250	.829	.842

Counts Unlimited
PO Box 1178
Corona, CA 92878
(951) 268-6268

City of Perris
N/S: Webster Avenue
E/W: Harley Knox Boulevard
Weather: Clear

File Name : PERWBHAAM
Site Code : 05115699
Start Date : 12/16/2015
Page No : 2

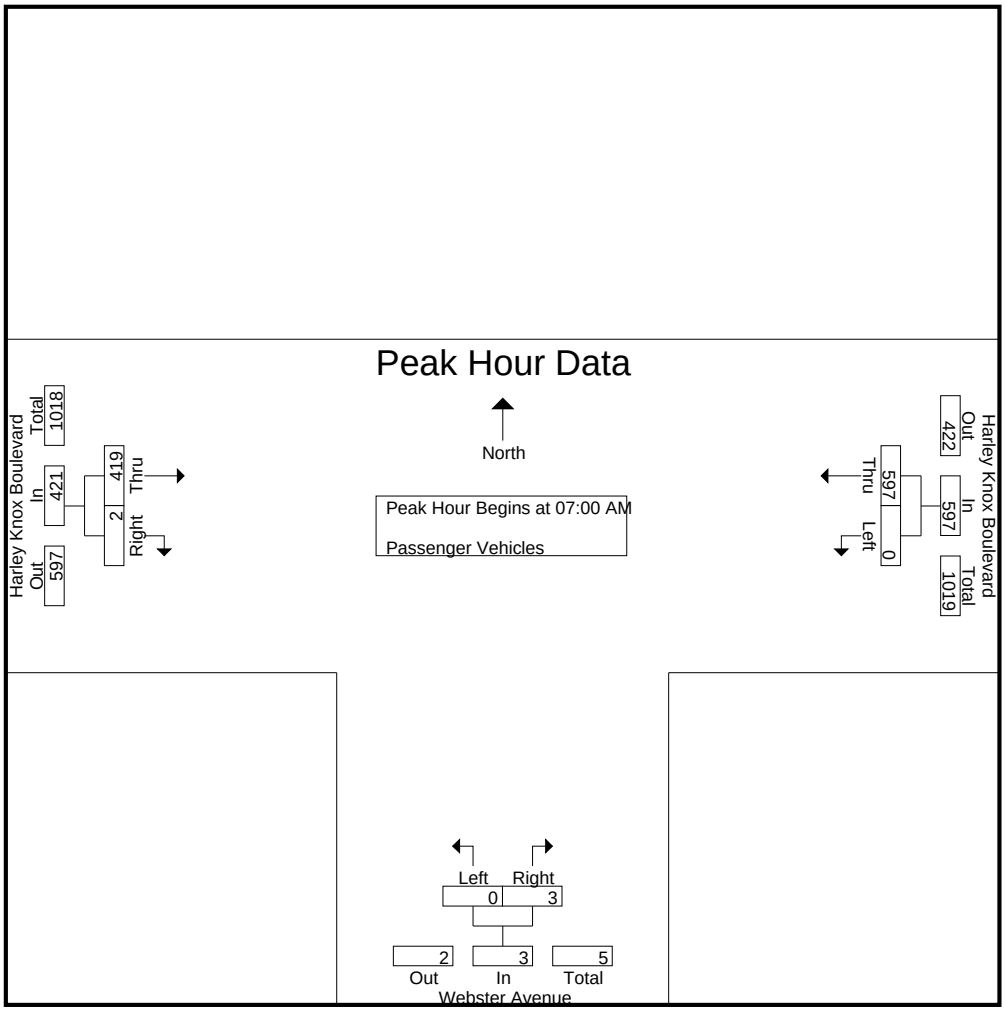

Peak Hour Analysis From 07:00 AM to 07:45 AM - Peak 1 of 1
Peak Hour for Each Approach Begins at:

	07:00 AM			07:00 AM			07:00 AM		
+0 mins.	0	**213**	**213**	0	**1**	**1**	89	0	89
+15 mins.	0	145	145	0	0	0	92	**2**	94
+30 mins.	0	121	121	0	1	1	111	0	111
+45 mins.	0	118	118	0	1	1	**127**	0	**127**
Total Volume	0	597	597	0	3	3	419	2	421
% App. Total	0	100		0	100		99.5	0.5	
PHF	.000	.701	.701	.000	.750	.750	.825	.250	.829

Counts Unlimited
PO Box 1178
Corona, CA 92878
(951) 268-6268

City of Perris
N/S: Webster Avenue
E/W: Harley Knox Boulevard
Weather: Clear

File Name : PERWBHAAM
Site Code : 05115699
Start Date : 12/16/2015
Page No : 1

Groups Printed- Large 2 Axle Vehicles

	Harley Knox Boulevard Westbound			Webster Avenue Northbound			Harley Knox Boulevard Eastbound			
Start Time	Left	Thru	App. Total	Left	Right	App. Total	Thru	Right	App. Total	Int. Total
07:00 AM	0	1	1	0	0	0	4	0	4	5
07:15 AM	0	1	1	0	0	0	4	0	4	5
07:30 AM	0	5	5	0	0	0	3	0	3	8
07:45 AM	0	5	5	0	0	0	3	0	3	8
Total	0	12	12	0	0	0	14	0	14	26
08:00 AM	0	2	2	0	0	0	2	0	2	4
08:15 AM	0	4	4	0	0	0	3	0	3	7
08:30 AM	0	3	3	0	0	0	4	1	5	8
08:45 AM	0	3	3	0	0	0	3	0	3	6
Total	0	12	12	0	0	0	12	1	13	25
Grand Total	0	24	24	0	0	0	26	1	27	51
Apprch %	0	100		0	0		96.3	3.7		
Total %	0	47.1	47.1	0	0	0	51	2	52.9	

	Harley Knox Boulevard Westbound			Webster Avenue Northbound			Harley Knox Boulevard Eastbound			
Start Time	Left	Thru	App. Total	Left	Right	App. Total	Thru	Right	App. Total	Int. Total
Peak Hour Analysis From 07:00 AM to 07:45 AM - Peak 1 of 1										
Peak Hour for Entire Intersection Begins at 07:00 AM										
07:00 AM	0	1	1	0	0	0	**4**	0	**4**	5
07:15 AM	0	1	1	0	0	0	4	0	4	5
07:30 AM	0	**5**	**5**	0	0	0	3	0	3	**8**
07:45 AM	0	5	5	0	0	0	3	0	3	8
Total Volume	0	12	12	0	0	0	14	0	14	26
% App. Total	0	100		0	0		100	0		
PHF	.000	.600	.600	.000	.000	.000	.875	.000	.875	.813

Counts Unlimited
PO Box 1178
Corona, CA 92878
(951) 268-6268

City of Perris
N/S: Webster Avenue
E/W: Harley Knox Boulevard
Weather: Clear

File Name : PERWBHAAM
Site Code : 05115699
Start Date : 12/16/2015
Page No : 2

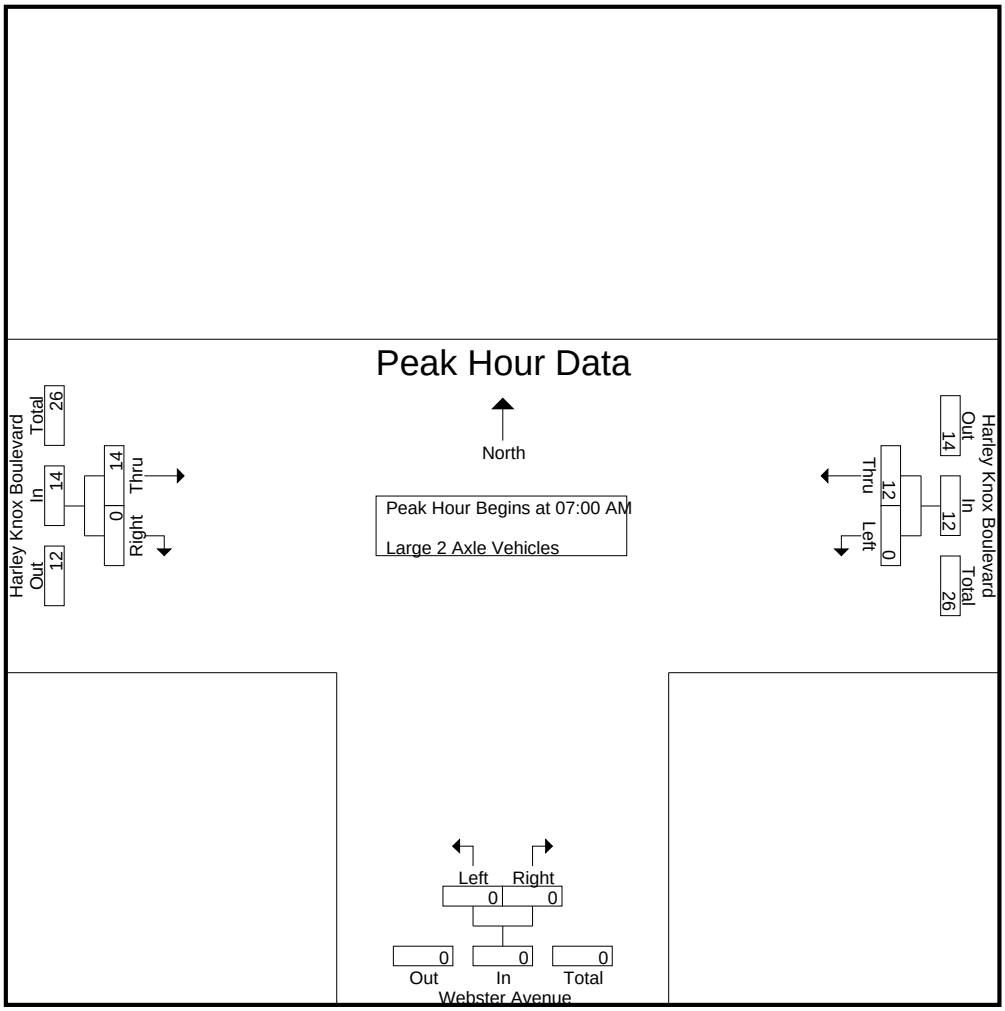

Peak Hour Analysis From 07:00 AM to 07:45 AM - Peak 1 of 1
Peak Hour for Each Approach Begins at:

	07:00 AM			07:00 AM			07:00 AM		
+0 mins.	0	1	1	0	0	0	**4**	0	**4**
+15 mins.	0	1	1	0	0	0	4	0	4
+30 mins.	0	**5**	**5**	0	0	0	3	0	3
+45 mins.	0	5	5	0	0	0	3	0	3
Total Volume	0	12	12	0	0	0	14	0	14
% App. Total	0	100		0	0		100	0	
PHF	.000	.600	.600	.000	.000	.000	.875	.000	.875

Counts Unlimited
PO Box 1178
Corona, CA 92878
(951) 268-6268

City of Perris
N/S: Webster Avenue
E/W: Harley Knox Boulevard
Weather: Clear

File Name : PERWBHAAM
Site Code : 05115699
Start Date : 12/16/2015
Page No : 1

Groups Printed- 3 Axle Vehicles

	Harley Knox Boulevard Westbound			Webster Avenue Northbound			Harley Knox Boulevard Eastbound			
Start Time	Left	Thru	App. Total	Left	Right	App. Total	Thru	Right	App. Total	Int. Total
07:00 AM	0	2	2	0	0	0	5	0	5	7
07:15 AM	0	4	4	0	0	0	1	0	1	5
07:30 AM	0	3	3	0	0	0	4	0	4	7
07:45 AM	0	2	2	0	0	0	3	0	3	5
Total	0	11	11	0	0	0	13	0	13	24
08:00 AM	0	3	3	0	0	0	2	0	2	5
08:15 AM	0	3	3	0	0	0	5	0	5	8
08:30 AM	0	6	6	0	0	0	3	0	3	9
08:45 AM	0	3	3	0	0	0	3	0	3	6
Total	0	15	15	0	0	0	13	0	13	28
Grand Total	0	26	26	0	0	0	26	0	26	52
Apprch %	0	100		0	0		100	0		
Total %	0	50	50	0	0	0	50	0	50	

	Harley Knox Boulevard Westbound			Webster Avenue Northbound			Harley Knox Boulevard Eastbound			
Start Time	Left	Thru	App. Total	Left	Right	App. Total	Thru	Right	App. Total	Int. Total
Peak Hour Analysis From 07:00 AM to 07:45 AM - Peak 1 of 1										
Peak Hour for Entire Intersection Begins at 07:00 AM										
07:00 AM	0	2	2	0	0	0	**5**	0	**5**	**7**
07:15 AM	0	**4**	**4**	0	0	0	1	0	1	5
07:30 AM	0	3	3	0	0	0	4	0	4	7
07:45 AM	0	2	2	0	0	0	3	0	3	5
Total Volume	0	11	11	0	0	0	13	0	13	24
% App. Total	0	100		0	0		100	0		
PHF	.000	.688	.688	.000	.000	.000	.650	.000	.650	.857

Counts Unlimited
PO Box 1178
Corona, CA 92878
(951) 268-6268

City of Perris
N/S: Webster Avenue
E/W: Harley Knox Boulevard
Weather: Clear

File Name : PERWBHAAM
Site Code : 05115699
Start Date : 12/16/2015
Page No : 2

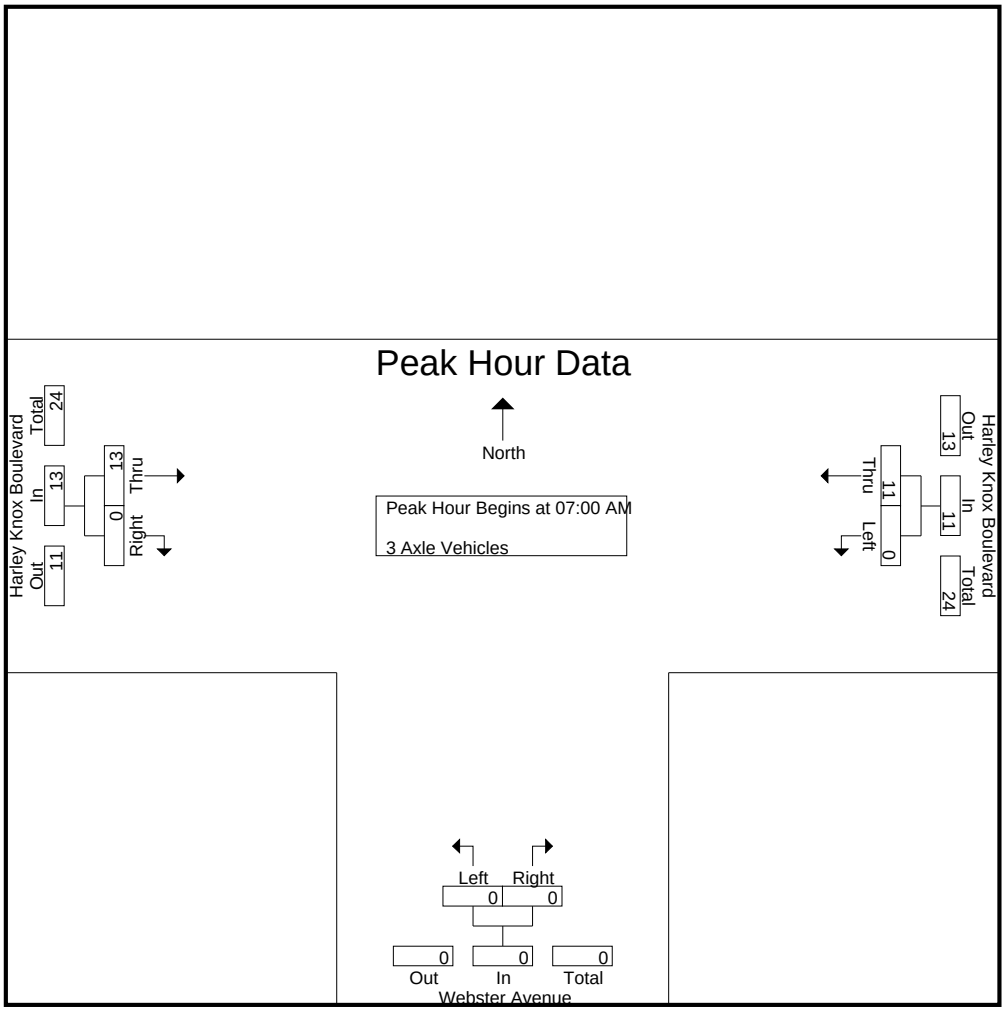

Peak Hour Analysis From 07:00 AM to 07:45 AM - Peak 1 of 1
Peak Hour for Each Approach Begins at:

	07:00 AM			07:00 AM			07:00 AM		
+0 mins.	0	2	2	0	0	0	**5**	0	**5**
+15 mins.	0	**4**	**4**	0	0	0	1	0	1
+30 mins.	0	3	3	0	0	0	4	0	4
+45 mins.	0	2	2	0	0	0	3	0	3
Total Volume	0	11	11	0	0	0	13	0	13
% App. Total	0	100		0	0		100	0	
PHF	.000	.688	.688	.000	.000	.000	.650	.000	.650

Counts Unlimited
PO Box 1178
Corona, CA 92878
(951) 268-6268

City of Perris
N/S: Webster Avenue
E/W: Harley Knox Boulevard
Weather: Clear

File Name : PERWBHAAM
Site Code : 05115699
Start Date : 12/16/2015
Page No : 1

Groups Printed- 4+ Axle Trucks

	Harley Knox Boulevard Westbound			Webster Avenue Northbound			Harley Knox Boulevard Eastbound			
Start Time	Left	Thru	App. Total	Left	Right	App. Total	Thru	Right	App. Total	Int. Total
07:00 AM	0	6	6	0	0	0	8	0	8	14
07:15 AM	0	6	6	0	0	0	11	0	11	17
07:30 AM	0	9	9	0	0	0	6	0	6	15
07:45 AM	0	7	7	0	0	0	4	0	4	11
Total	0	28	28	0	0	0	29	0	29	57
08:00 AM	0	16	16	0	0	0	8	0	8	24
08:15 AM	0	8	8	0	0	0	6	0	6	14
08:30 AM	0	5	5	0	0	0	7	0	7	12
08:45 AM	0	11	11	0	0	0	8	0	8	19
Total	0	40	40	0	0	0	29	0	29	69
Grand Total	0	68	68	0	0	0	58	0	58	126
Apprch %	0	100		0	0		100	0		
Total %	0	54	54	0	0	0	46	0	46	

	Harley Knox Boulevard Westbound			Webster Avenue Northbound			Harley Knox Boulevard Eastbound			
Start Time	Left	Thru	App. Total	Left	Right	App. Total	Thru	Right	App. Total	Int. Total
Peak Hour Analysis From 07:00 AM to 07:45 AM - Peak 1 of 1										
Peak Hour for Entire Intersection Begins at 07:00 AM										
07:00 AM	0	6	6	0	0	0	8	0	8	14
07:15 AM	0	6	6	0	0	0	**11**	0	**11**	**17**
07:30 AM	0	**9**	**9**	0	0	0	6	0	6	15
07:45 AM	0	7	7	0	0	0	4	0	4	11
Total Volume	0	28	28	0	0	0	29	0	29	57
% App. Total	0	100		0	0		100	0		
PHF	.000	.778	.778	.000	.000	.000	.659	.000	.659	.838

Counts Unlimited
PO Box 1178
Corona, CA 92878
(951) 268-6268

City of Perris
N/S: Webster Avenue
E/W: Harley Knox Boulevard
Weather: Clear

File Name : PERWBHAAM
Site Code : 05115699
Start Date : 12/16/2015
Page No : 2

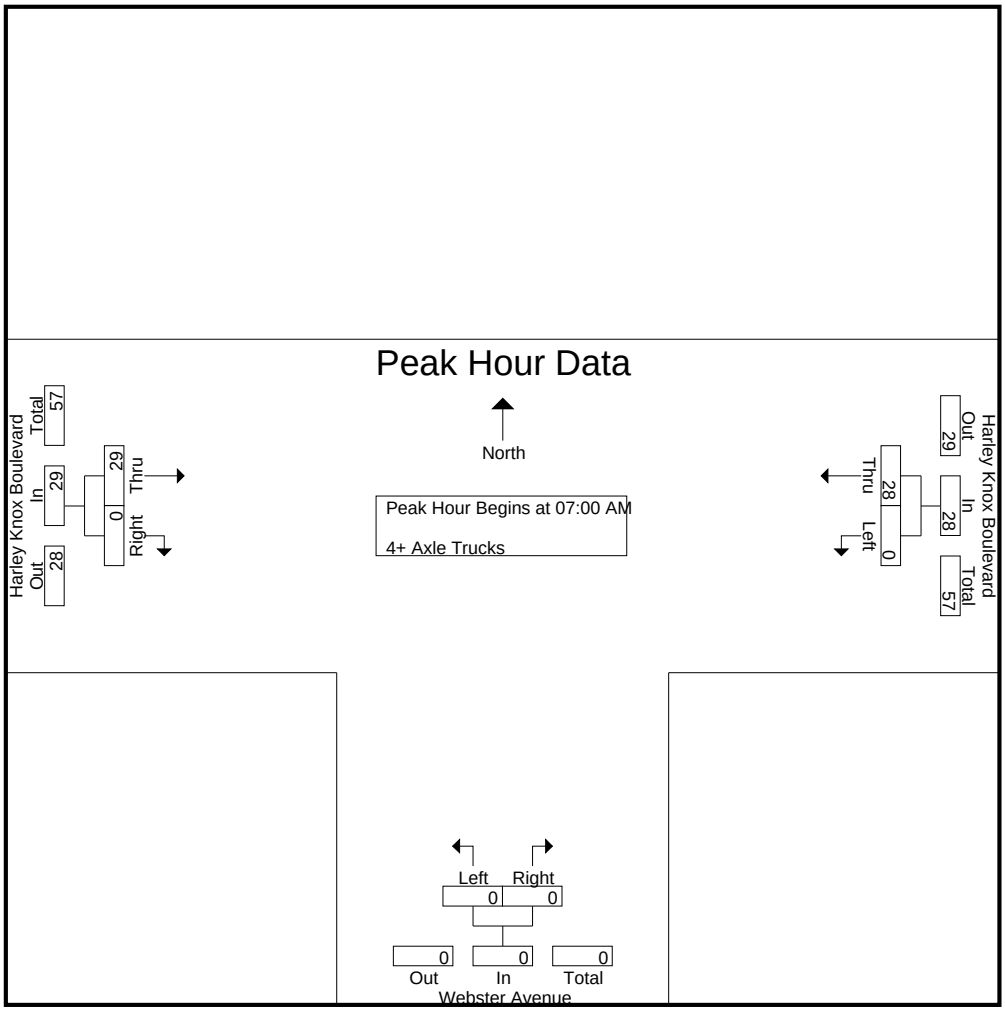

Peak Hour Analysis From 07:00 AM to 07:45 AM - Peak 1 of 1
Peak Hour for Each Approach Begins at:

	07:00 AM			07:00 AM			07:00 AM		
+0 mins.	0	6	6	0	0	0	8	0	8
+15 mins.	0	6	6	0	0	0	**11**	0	**11**
+30 mins.	0	**9**	**9**	0	0	0	6	0	6
+45 mins.	0	7	7	0	0	0	4	0	4
Total Volume	0	28	28	0	0	0	29	0	29
% App. Total	0	100		0	0		100	0	
PHF	.000	.778	.778	.000	.000	.000	.659	.000	.659

Counts Unlimited
PO Box 1178
Corona, CA 92878
(951) 268-6268

City of Perris
N/S: Webster Avenue
E/W: Harley Knox Boulevard
Weather: Clear

File Name : PERWBHAPM
Site Code : 05115699
Start Date : 12/16/2015
Page No : 1

Groups Printed- Passenger Vehicles - Large 2 Axle Vehicles - 3 Axle Vehicles - 4+ Axle Trucks

	Harley Knox Boulevard Westbound			Webster Avenue Northbound			Harley Knox Boulevard Eastbound			
Start Time	Left	Thru	App. Total	Left	Right	App. Total	Thru	Right	App. Total	Int. Total
04:00 PM	0	106	106	0	8	8	125	2	127	241
04:15 PM	0	96	96	0	0	0	133	0	133	229
04:30 PM	0	142	142	0	1	1	174	0	174	317
04:45 PM	0	192	192	0	1	1	129	1	130	323
Total	0	536	536	0	10	10	561	3	564	1110
05:00 PM	0	132	132	0	1	1	120	1	121	254
05:15 PM	0	111	111	0	0	0	103	0	103	214
05:30 PM	0	125	125	0	3	3	142	2	144	272
05:45 PM	0	135	135	0	1	1	161	1	162	298
Total	0	503	503	0	5	5	526	4	530	1038
Grand Total	0	1039	1039	0	15	15	1087	7	1094	2148
Apprch %	0	100		0	100		99.4	0.6		
Total %	0	48.4	48.4	0	0.7	0.7	50.6	0.3	50.9	
Passenger Vehicles	0	943	943	0	15	15	988	7	995	1953
% Passenger Vehicles	0	90.8	90.8	0	100	100	90.9	100	91	90.9
Large 2 Axle Vehicles	0	8	8	0	0	0	12	0	12	20
% Large 2 Axle Vehicles	0	0.8	0.8	0	0	0	1.1	0	1.1	0.9
3 Axle Vehicles	0	16	16	0	0	0	40	0	40	56
% 3 Axle Vehicles	0	1.5	1.5	0	0	0	3.7	0	3.7	2.6
4+ Axle Trucks	0	72	72	0	0	0	47	0	47	119
% 4+ Axle Trucks	0	6.9	6.9	0	0	0	4.3	0	4.3	5.5

	Harley Knox Boulevard Westbound			Webster Avenue Northbound			Harley Knox Boulevard Eastbound			
Start Time	Left	Thru	App. Total	Left	Right	App. Total	Thru	Right	App. Total	Int. Total
Peak Hour Analysis From 04:00 PM to 05:45 PM - Peak 1 of 1										
Peak Hour for Entire Intersection Begins at 04:15 PM										
04:15 PM	0	96	96	0	0	0	133	0	133	229
04:30 PM	0	142	142	0	**1**	**1**	**174**	0	**174**	317
04:45 PM	0	**192**	**192**	0	1	1	129	**1**	130	**323**
05:00 PM	0	132	132	0	1	1	120	1	121	254
Total Volume	0	562	562	0	3	3	556	2	558	1123
% App. Total	0	100		0	100		99.6	0.4		
PHF	.000	.732	.732	.000	.750	.750	.799	.500	.802	.869

Counts Unlimited
PO Box 1178
Corona, CA 92878
(951) 268-6268

City of Perris
N/S: Webster Avenue
E/W: Harley Knox Boulevard
Weather: Clear

File Name : PERWBHAPM
Site Code : 05115699
Start Date : 12/16/2015
Page No : 2

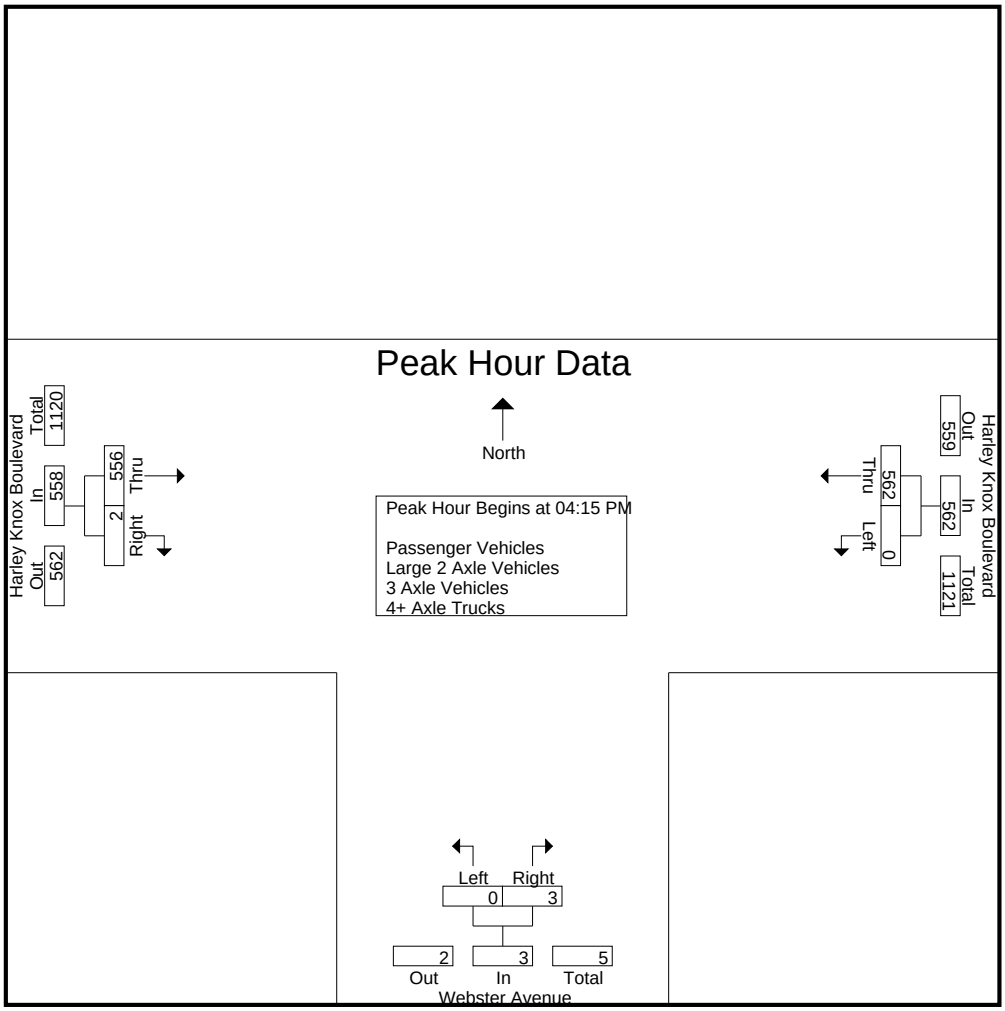

Peak Hour Analysis From 04:00 PM to 05:45 PM - Peak 1 of 1
Peak Hour for Each Approach Begins at:

	04:30 PM			04:00 PM			04:00 PM		
+0 mins.	0	142	142	0	**8**	**8**	125	**2**	127
+15 mins.	0	**192**	**192**	0	0	0	133	0	133
+30 mins.	0	132	132	0	1	1	**174**	0	**174**
+45 mins.	0	111	111	0	1	1	129	1	130
Total Volume	0	577	577	0	10	10	561	3	564
% App. Total	0	100		0	100		99.5	0.5	
PHF	.000	.751	.751	.000	.313	.313	.806	.375	.810

Counts Unlimited
PO Box 1178
Corona, CA 92878
(951) 268-6268

City of Perris
N/S: Webster Avenue
E/W: Harley Knox Boulevard
Weather: Clear

File Name : PERWBHAPM
Site Code : 05115699
Start Date : 12/16/2015
Page No : 1

Groups Printed- Passenger Vehicles

	Harley Knox Boulevard Westbound			Webster Avenue Northbound			Harley Knox Boulevard Eastbound			
Start Time	Left	Thru	App. Total	Left	Right	App. Total	Thru	Right	App. Total	Int. Total
04:00 PM	0	96	96	0	8	8	115	2	117	221
04:15 PM	0	83	83	0	0	0	119	0	119	202
04:30 PM	0	125	125	0	1	1	153	0	153	279
04:45 PM	0	176	176	0	1	1	116	1	117	294
Total	0	480	480	0	10	10	503	3	506	996
05:00 PM	0	124	124	0	1	1	105	1	106	231
05:15 PM	0	105	105	0	0	0	96	0	96	201
05:30 PM	0	111	111	0	3	3	133	2	135	249
05:45 PM	0	123	123	0	1	1	151	1	152	276
Total	0	463	463	0	5	5	485	4	489	957
Grand Total	0	943	943	0	15	15	988	7	995	1953
Apprch %	0	100		0	100		99.3	0.7		
Total %	0	48.3	48.3	0	0.8	0.8	50.6	0.4	50.9	

	Harley Knox Boulevard Westbound			Webster Avenue Northbound			Harley Knox Boulevard Eastbound			
Start Time	Left	Thru	App. Total	Left	Right	App. Total	Thru	Right	App. Total	Int. Total
Peak Hour Analysis From 04:15 PM to 05:00 PM - Peak 1 of 1										
Peak Hour for Entire Intersection Begins at 04:15 PM										
04:15 PM	0	83	83	0	0	0	119	0	119	202
04:30 PM	0	125	125	0	**1**	**1**	**153**	0	**153**	279
04:45 PM	0	**176**	**176**	0	1	1	116	**1**	117	**294**
05:00 PM	0	124	124	0	1	1	105	1	106	231
Total Volume	0	508	508	0	3	3	493	2	495	1006
% App. Total	0	100		0	100		99.6	0.4		
PHF	.000	.722	.722	.000	.750	.750	.806	.500	.809	.855

Counts Unlimited
PO Box 1178
Corona, CA 92878
(951) 268-6268

City of Perris
N/S: Webster Avenue
E/W: Harley Knox Boulevard
Weather: Clear

File Name : PERWBHAPM
Site Code : 05115699
Start Date : 12/16/2015
Page No : 2

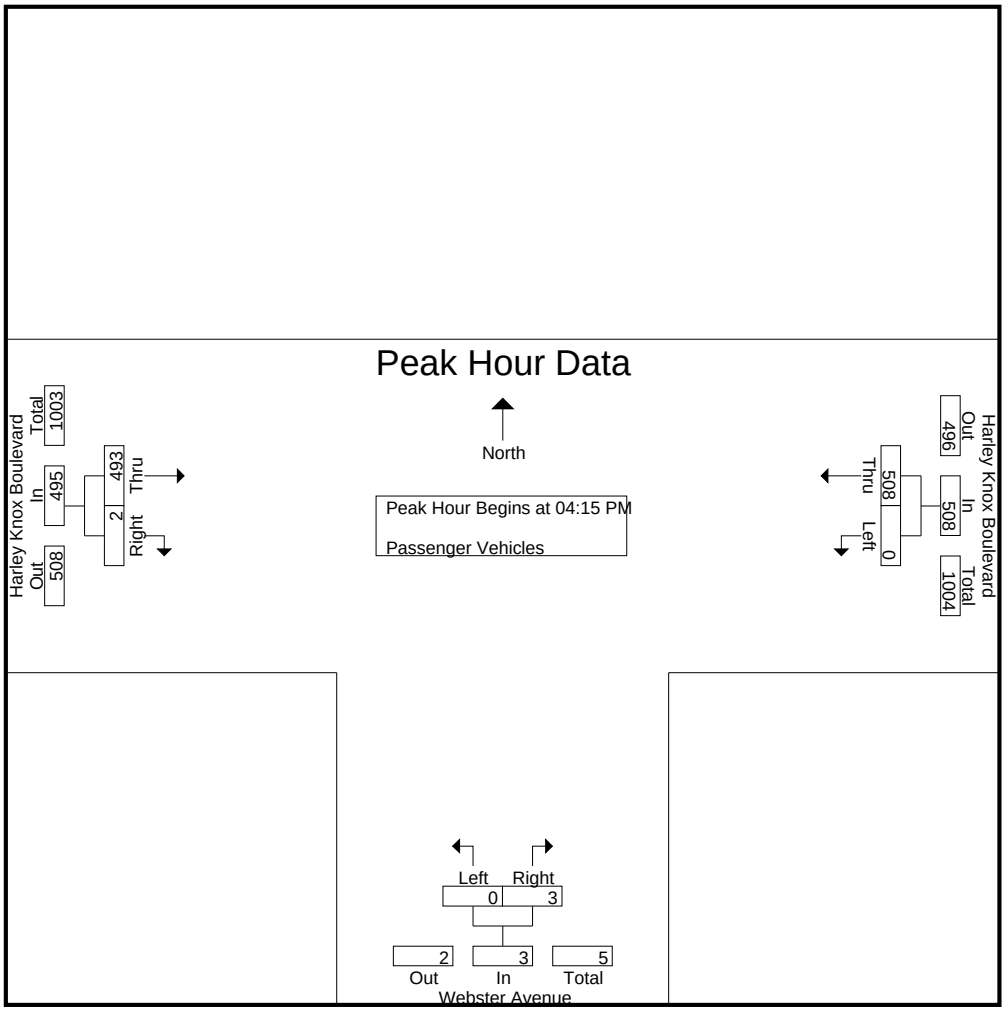

Peak Hour Analysis From 04:15 PM to 05:00 PM - Peak 1 of 1
Peak Hour for Each Approach Begins at:

	04:15 PM			04:15 PM			04:15 PM		
+0 mins.	0	83	83	0	0	0	119	0	119
+15 mins.	0	125	125	0	**1**	**1**	**153**	0	**153**
+30 mins.	0	**176**	**176**	0	1	1	116	**1**	117
+45 mins.	0	124	124	0	1	1	105	1	106
Total Volume	0	508	508	0	3	3	493	2	495
% App. Total	0	100		0	100		99.6	0.4	
PHF	.000	.722	.722	.000	.750	.750	.806	.500	.809

Counts Unlimited
PO Box 1178
Corona, CA 92878
(951) 268-6268

City of Perris
N/S: Webster Avenue
E/W: Harley Knox Boulevard
Weather: Clear

File Name : PERWBHAPM
Site Code : 05115699
Start Date : 12/16/2015
Page No : 1

Groups Printed- Large 2 Axle Vehicles

	Harley Knox Boulevard Westbound			Webster Avenue Northbound			Harley Knox Boulevard Eastbound			
Start Time	Left	Thru	App. Total	Left	Right	App. Total	Thru	Right	App. Total	Int. Total
04:00 PM	0	0	0	0	0	0	2	0	2	2
04:15 PM	0	0	0	0	0	0	4	0	4	4
04:30 PM	0	3	3	0	0	0	1	0	1	4
04:45 PM	0	1	1	0	0	0	0	0	0	1
Total	0	4	4	0	0	0	7	0	7	11
05:00 PM	0	1	1	0	0	0	2	0	2	3
05:15 PM	0	0	0	0	0	0	0	0	0	0
05:30 PM	0	1	1	0	0	0	1	0	1	2
05:45 PM	0	2	2	0	0	0	2	0	2	4
Total	0	4	4	0	0	0	5	0	5	9
Grand Total	0	8	8	0	0	0	12	0	12	20
Apprch %	0	100		0	0		100	0		
Total %	0	40	40	0	0	0	60	0	60	

	Harley Knox Boulevard Westbound			Webster Avenue Northbound			Harley Knox Boulevard Eastbound			
Start Time	Left	Thru	App. Total	Left	Right	App. Total	Thru	Right	App. Total	Int. Total
Peak Hour Analysis From 04:15 PM to 05:00 PM - Peak 1 of 1										
Peak Hour for Entire Intersection Begins at 04:15 PM										
04:15 PM	0	0	0	0	0	0	**4**	0	**4**	**4**
04:30 PM	0	**3**	**3**	0	0	0	1	0	1	4
04:45 PM	0	1	1	0	0	0	0	0	0	1
05:00 PM	0	1	1	0	0	0	2	0	2	3
Total Volume	0	5	5	0	0	0	7	0	7	12
% App. Total	0	100		0	0		100	0		
PHF	.000	.417	.417	.000	.000	.000	.438	.000	.438	.750

Counts Unlimited
PO Box 1178
Corona, CA 92878
(951) 268-6268

City of Perris
N/S: Webster Avenue
E/W: Harley Knox Boulevard
Weather: Clear

File Name : PERWBHAPM
Site Code : 05115699
Start Date : 12/16/2015
Page No : 2

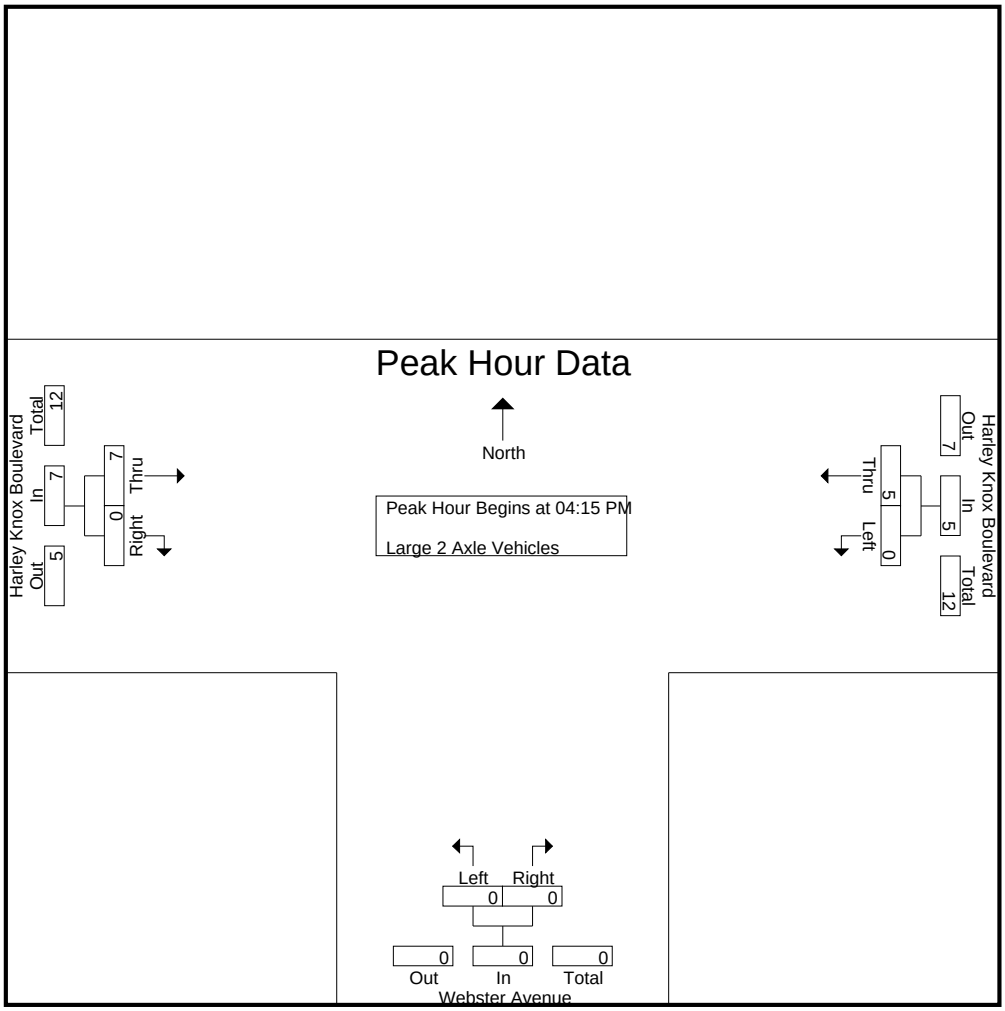

Peak Hour Analysis From 04:15 PM to 05:00 PM - Peak 1 of 1
Peak Hour for Each Approach Begins at:

	04:15 PM			04:15 PM			04:15 PM		
+0 mins.	0	0	0	0	0	0	**4**	0	**4**
+15 mins.	0	**3**	**3**	0	0	0	1	0	1
+30 mins.	0	1	1	0	0	0	0	0	0
+45 mins.	0	1	1	0	0	0	2	0	2
Total Volume	0	5	5	0	0	0	7	0	7
% App. Total	0	100		0	0		100	0	
PHF	.000	.417	.417	.000	.000	.000	.438	.000	.438

Counts Unlimited
PO Box 1178
Corona, CA 92878
(951) 268-6268

City of Perris
N/S: Webster Avenue
E/W: Harley Knox Boulevard
Weather: Clear

File Name : PERWBHAPM
Site Code : 05115699
Start Date : 12/16/2015
Page No : 1

Groups Printed- 3 Axle Vehicles

	Harley Knox Boulevard Westbound			Webster Avenue Northbound			Harley Knox Boulevard Eastbound			
Start Time	Left	Thru	App. Total	Left	Right	App. Total	Thru	Right	App. Total	Int. Total
04:00 PM	0	2	2	0	0	0	3	0	3	5
04:15 PM	0	2	2	0	0	0	5	0	5	7
04:30 PM	0	3	3	0	0	0	9	0	9	12
04:45 PM	0	3	3	0	0	0	3	0	3	6
Total	0	10	10	0	0	0	20	0	20	30
05:00 PM	0	1	1	0	0	0	9	0	9	10
05:15 PM	0	1	1	0	0	0	2	0	2	3
05:30 PM	0	4	4	0	0	0	3	0	3	7
05:45 PM	0	0	0	0	0	0	6	0	6	6
Total	0	6	6	0	0	0	20	0	20	26
Grand Total	0	16	16	0	0	0	40	0	40	56
Apprch %	0	100		0	0		100	0		
Total %	0	28.6	28.6	0	0	0	71.4	0	71.4	

	Harley Knox Boulevard Westbound			Webster Avenue Northbound			Harley Knox Boulevard Eastbound			
Start Time	Left	Thru	App. Total	Left	Right	App. Total	Thru	Right	App. Total	Int. Total
Peak Hour Analysis From 04:15 PM to 05:00 PM - Peak 1 of 1										
Peak Hour for Entire Intersection Begins at 04:15 PM										
04:15 PM	0	2	2	0	0	0	5	0	5	7
04:30 PM	0	**3**	**3**	0	0	0	**9**	0	**9**	**12**
04:45 PM	0	3	3	0	0	0	3	0	3	6
05:00 PM	0	1	1	0	0	0	9	0	9	10
Total Volume	0	9	9	0	0	0	26	0	26	35
% App. Total	0	100		0	0		100	0		
PHF	.000	.750	.750	.000	.000	.000	.722	.000	.722	.729

Counts Unlimited
PO Box 1178
Corona, CA 92878
(951) 268-6268

City of Perris
N/S: Webster Avenue
E/W: Harley Knox Boulevard
Weather: Clear

File Name : PERWBHAPM
Site Code : 05115699
Start Date : 12/16/2015
Page No : 2

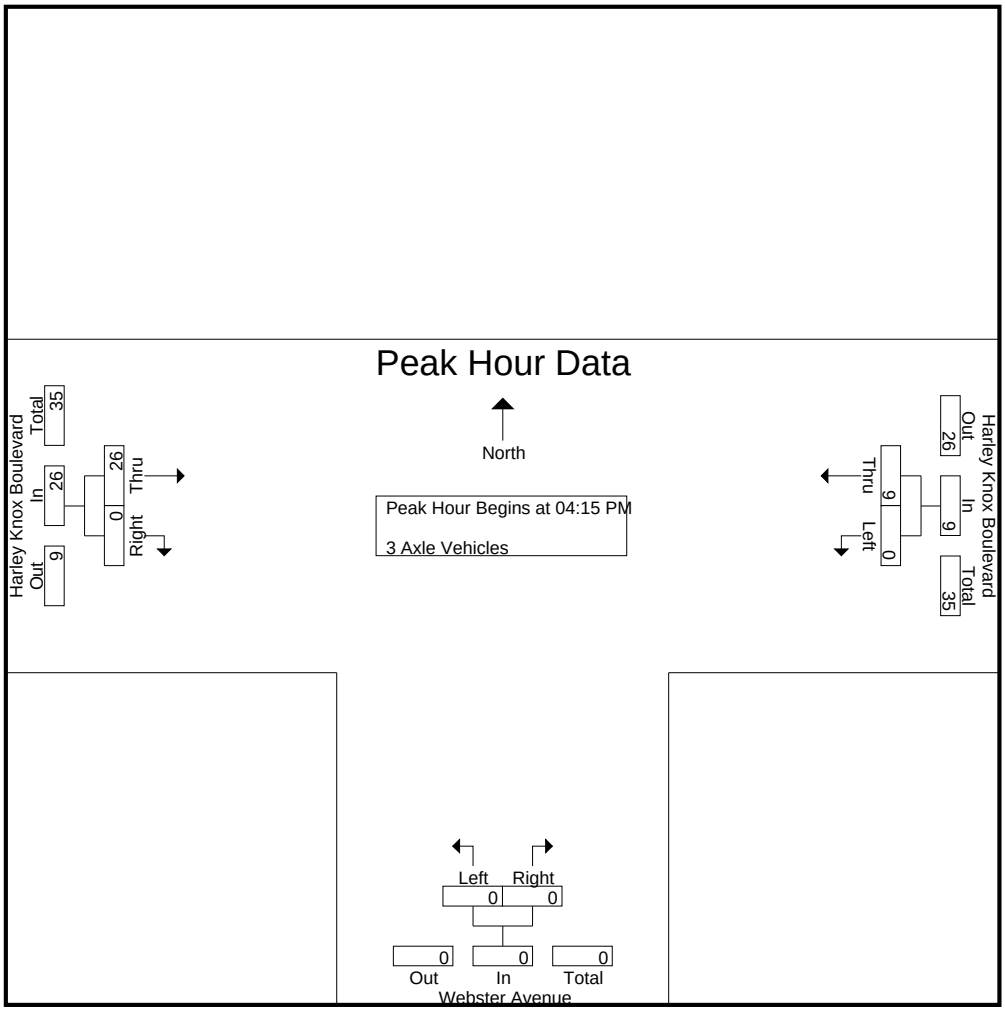

Peak Hour Analysis From 04:15 PM to 05:00 PM - Peak 1 of 1
Peak Hour for Each Approach Begins at:

	04:15 PM			04:15 PM			04:15 PM		
+0 mins.	0	2	2	0	0	0	5	0	5
+15 mins.	0	**3**	**3**	0	0	0	**9**	0	**9**
+30 mins.	0	3	3	0	0	0	3	0	3
+45 mins.	0	1	1	0	0	0	9	0	9
Total Volume	0	9	9	0	0	0	26	0	26
% App. Total	0	100		0	0		100	0	
PHF	.000	.750	.750	.000	.000	.000	.722	.000	.722

Counts Unlimited
PO Box 1178
Corona, CA 92878
(951) 268-6268

City of Perris
N/S: Webster Avenue
E/W: Harley Knox Boulevard
Weather: Clear

File Name : PERWBHAPM
Site Code : 05115699
Start Date : 12/16/2015
Page No : 1

Groups Printed- 4+ Axle Trucks

	Harley Knox Boulevard Westbound			Webster Avenue Northbound			Harley Knox Boulevard Eastbound			
Start Time	Left	Thru	App. Total	Left	Right	App. Total	Thru	Right	App. Total	Int. Total
04:00 PM	0	8	8	0	0	0	5	0	5	13
04:15 PM	0	11	11	0	0	0	5	0	5	16
04:30 PM	0	11	11	0	0	0	11	0	11	22
04:45 PM	0	12	12	0	0	0	10	0	10	22
Total	0	42	42	0	0	0	31	0	31	73
05:00 PM	0	6	6	0	0	0	4	0	4	10
05:15 PM	0	5	5	0	0	0	5	0	5	10
05:30 PM	0	9	9	0	0	0	5	0	5	14
05:45 PM	0	10	10	0	0	0	2	0	2	12
Total	0	30	30	0	0	0	16	0	16	46
Grand Total	0	72	72	0	0	0	47	0	47	119
Apprch %	0	100		0	0		100	0		
Total %	0	60.5	60.5	0	0	0	39.5	0	39.5	

	Harley Knox Boulevard Westbound			Webster Avenue Northbound			Harley Knox Boulevard Eastbound			
Start Time	Left	Thru	App. Total	Left	Right	App. Total	Thru	Right	App. Total	Int. Total
Peak Hour Analysis From 04:15 PM to 05:00 PM - Peak 1 of 1										
Peak Hour for Entire Intersection Begins at 04:15 PM										
04:15 PM	0	11	11	0	0	0	5	0	5	16
04:30 PM	0	11	11	0	0	0	**11**	0	**11**	**22**
04:45 PM	0	**12**	**12**	0	0	0	10	0	10	22
05:00 PM	0	6	6	0	0	0	4	0	4	10
Total Volume	0	40	40	0	0	0	30	0	30	70
% App. Total	0	100		0	0		100	0		
PHF	.000	.833	.833	.000	.000	.000	.682	.000	.682	.795

Counts Unlimited
PO Box 1178
Corona, CA 92878
(951) 268-6268

City of Perris
N/S: Webster Avenue
E/W: Harley Knox Boulevard
Weather: Clear

File Name : PERWBHAPM
Site Code : 05115699
Start Date : 12/16/2015
Page No : 2

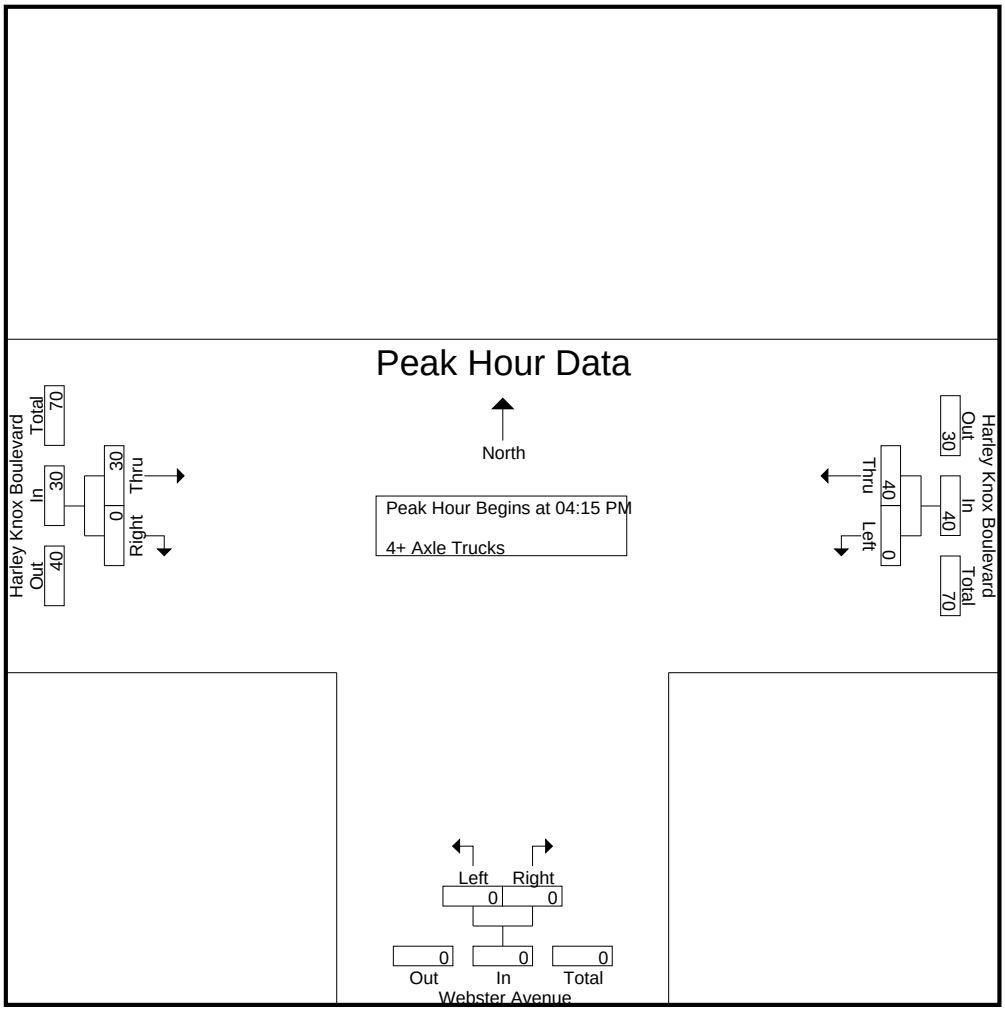

Peak Hour Analysis From 04:15 PM to 05:00 PM - Peak 1 of 1
Peak Hour for Each Approach Begins at:

	04:15 PM			04:15 PM			04:15 PM		
+0 mins.	0	11	11	0	0	0	5	0	5
+15 mins.	0	11	11	0	0	0	**11**	0	**11**
+30 mins.	0	**12**	**12**	0	0	0	10	0	10
+45 mins.	0	6	6	0	0	0	4	0	4
Total Volume	0	40	40	0	0	0	30	0	30
% App. Total	0	100		0	0		100	0	
PHF	.000	.833	.833	.000	.000	.000	.682	.000	.682

Location: Perris
N/S: Webster Avenue
E/W: Harley Knox Boulevard

Site Code: 051-15699
Date: 12/16/2015
Weather: Clear

PEDESTRIANS

	North Leg Webster Avenue	East Leg Harley Knox Boulevard	South Leg Webster Avenue	West Leg Harley Knox Boulevard	TOTAL
7:00 AM	0	0	0	0	0
7:15 AM	0	0	0	0	0
7:30 AM	0	0	0	0	0
7:45 AM	0	0	0	0	0
8:00 AM	0	0	0	0	0
8:15 AM	0	0	0	0	0
8:30 AM	0	0	0	0	0
8:45 AM	0	0	0	0	0
TOTAL VOLUMES:	0	0	0	0	0

	North Leg Webster Avenue	East Leg Harley Knox Boulevard	South Leg Webster Avenue	West Leg Harley Knox Boulevard	TOTAL
4:00 PM	0	0	0	0	0
4:15 PM	0	0	0	0	0
4:30 PM	0	0	0	0	0
4:45 PM	0	0	0	0	0
5:00 PM	0	0	0	0	0
5:15 PM	0	0	0	0	0
5:30 PM	0	0	0	0	0
5:45 PM	0	0	0	0	0
TOTAL VOLUMES:	0	0	0	0	0

Counts Unlimited, Inc.
PO Box 1178
Corona, CA 92878
951-268-6268

Location: Perris
N/S: Webster Avenue
E/W: Harley Knox Boulevard

Site Code: 051-15699
Date: 12/16/2015
Weather: Clear

BICYCLES

	North Leg Webster Avenue	East Leg Harley Knox Boulevard	South Leg Webster Avenue	West Leg Harley Knox Boulevard	TOTAL
7:00 AM	0	0	0	0	0
7:15 AM	0	0	0	0	0
7:30 AM	0	0	0	0	0
7:45 AM	0	0	0	0	0
8:00 AM	0	0	0	0	0
8:15 AM	0	0	0	0	0
8:30 AM	0	0	0	0	0
8:45 AM	0	0	0	0	0
TOTAL VOLUMES:	0	0	0	0	0

	North Leg Webster Avenue	East Leg Harley Knox Boulevard	South Leg Webster Avenue	West Leg Harley Knox Boulevard	TOTAL
4:00 PM	0	0	0	0	0
4:15 PM	0	0	0	0	0
4:30 PM	0	0	0	0	0
4:45 PM	0	0	0	0	0
5:00 PM	0	0	0	0	0
5:15 PM	0	0	0	0	0
5:30 PM	0	0	0	0	0
5:45 PM	0	0	0	0	0
TOTAL VOLUMES:	0	0	0	0	0

Counts Unlimited, Inc.
PO Box 1178
Corona, CA 92878
951-268-6268

Counts Unlimited
PO Box 1178
Corona, CA 92878
(951) 268-6268

City of Moreno Valley
N/S: Indian Street
E/W: Nandina Avenue
Weather: Clear

File Name : MRVINNAAM
Site Code : 05115699
Start Date : 12/16/2015
Page No : 1

Groups Printed- Passenger Vehicles - Large 2 Axle Vehicles - 3 Axle Vehicles - 4+ Axle Trucks

	Indian Street Southbound					Nandina Avenue Westbound					Indian Street Northbound					Nandina Avenue Eastbound							
Start Time	Left	Thru	Right	RTOR	App. Total	Left	Thru	Right	RTOR	App. Total	Left	Thru	Right	RTOR	App. Total	Left	Thru	Right	RTOR	App. Total	Exclu. Total	Inclu. Total	Int. Total
07:00 AM	1	17	0	0	18	15	2	0	0	17	13	39	4	1	56	1	4	17	9	22	10	113	123
07:15 AM	0	13	2	0	15	5	1	1	1	7	10	47	5	0	62	0	0	17	15	17	16	101	117
07:30 AM	2	11	1	1	14	7	6	1	0	14	11	52	4	1	67	0	3	17	10	20	12	115	127
07:45 AM	0	13	0	0	13	11	1	0	0	12	18	59	11	4	88	0	7	20	10	27	14	140	154
Total	3	54	3	1	60	38	10	2	1	50	52	197	24	6	273	1	14	71	44	86	52	469	521
08:00 AM	3	16	0	0	19	4	4	0	0	8	13	43	5	2	61	1	5	12	9	18	11	106	117
08:15 AM	0	24	3	2	27	8	3	5	5	16	6	18	1	0	25	0	2	14	10	16	17	84	101
08:30 AM	1	10	3	0	14	2	1	1	1	4	13	33	6	1	52	2	3	12	8	17	10	87	97
08:45 AM	1	15	4	2	20	7	2	1	0	10	3	19	5	0	27	1	2	14	10	17	12	74	86
Total	5	65	10	4	80	21	10	7	6	38	35	113	17	3	165	4	12	52	37	68	50	351	401
Grand Total	8	119	13	5	140	59	20	9	7	88	87	310	41	9	438	5	26	123	81	154	102	820	922
Apprch %	5.7	85	9.3			67	22.7	10.2			19.9	70.8	9.4			3.2	16.9	79.9					
Total %	1	14.5	1.6		17.1	7.2	2.4	1.1		10.7	10.6	37.8	5		53.4	0.6	3.2	15		18.8	11.1	88.9	
Passenger Vehicles	2	96	4		102	45	11	4		63	47	282	24		357	2	14	80		154	0	0	676
% Passenger Vehicles	25	80.7	30.8	0	70.3	76.3	55	44.4	42.9	66.3	54	91	58.5	44.4	79.9	40	53.8	65	71.6	65.5	0	0	73.3
Large 2 Axle Vehicles	1	10	3		15	4	4	0		8	4	11	8		25	1	4	9		20	0	0	68
% Large 2 Axle Vehicles	12.5	8.4	23.1	20	10.3	6.8	20	0	0	8.4	4.6	3.5	19.5	22.2	5.6	20	15.4	7.3	7.4	8.5	0	0	7.4
3 Axle Vehicles	2	4	1		8	5	0	3		11	9	2	4		17	0	1	9		17	0	0	53
% 3 Axle Vehicles	25	3.4	7.7	20	5.5	8.5	0	33.3	42.9	11.6	10.3	0.6	9.8	22.2	3.8	0	3.8	7.3	8.6	7.2	0	0	5.7
4+ Axle Trucks	3	9	5		20	5	5	2		13	27	15	5		48	2	7	25		44	0	0	125
% 4+ Axle Trucks	37.5	7.6	38.5	60	13.8	8.5	25	22.2	14.3	13.7	31	4.8	12.2	11.1	10.7	40	26.9	20.3	12.3	18.7	0	0	13.6

	Indian Street Southbound				Nandina Avenue Westbound				Indian Street Northbound				Nandina Avenue Eastbound				
Start Time	Left	Thru	Right	App. Total	Left	Thru	Right	App. Total	Left	Thru	Right	App. Total	Left	Thru	Right	App. Total	Int. Total
Peak Hour Analysis From 07:00 AM to 08:45 AM - Peak 1 of 1																	
Peak Hour for Entire Intersection Begins at 07:00 AM																	
07:00 AM	1	**17**	0	**18**	**15**	2	0	**17**	13	39	4	56	**1**	4	17	22	113
07:15 AM	0	13	**2**	15	5	1	**1**	7	10	47	5	62	0	0	17	17	101
07:30 AM	**2**	11	1	14	7	**6**	1	14	11	52	4	67	0	3	17	20	115
07:45 AM	0	13	0	13	11	1	0	12	**18**	**59**	**11**	**88**	0	**7**	**20**	**27**	**140**
Total Volume	3	54	3	60	38	10	2	50	52	197	24	273	1	14	71	86	469
% App. Total	5	90	5		76	20	4		19	72.2	8.8		1.2	16.3	82.6		
PHF	.375	.794	.375	.833	.633	.417	.500	.735	.722	.835	.545	.776	.250	.500	.888	.796	.838

Counts Unlimited
PO Box 1178
Corona, CA 92878
(951) 268-6268

City of Moreno Valley
N/S: Indian Street
E/W: Nandina Avenue
Weather: Clear

File Name : MRVINNAAM
Site Code : 05115699
Start Date : 12/16/2015
Page No : 2

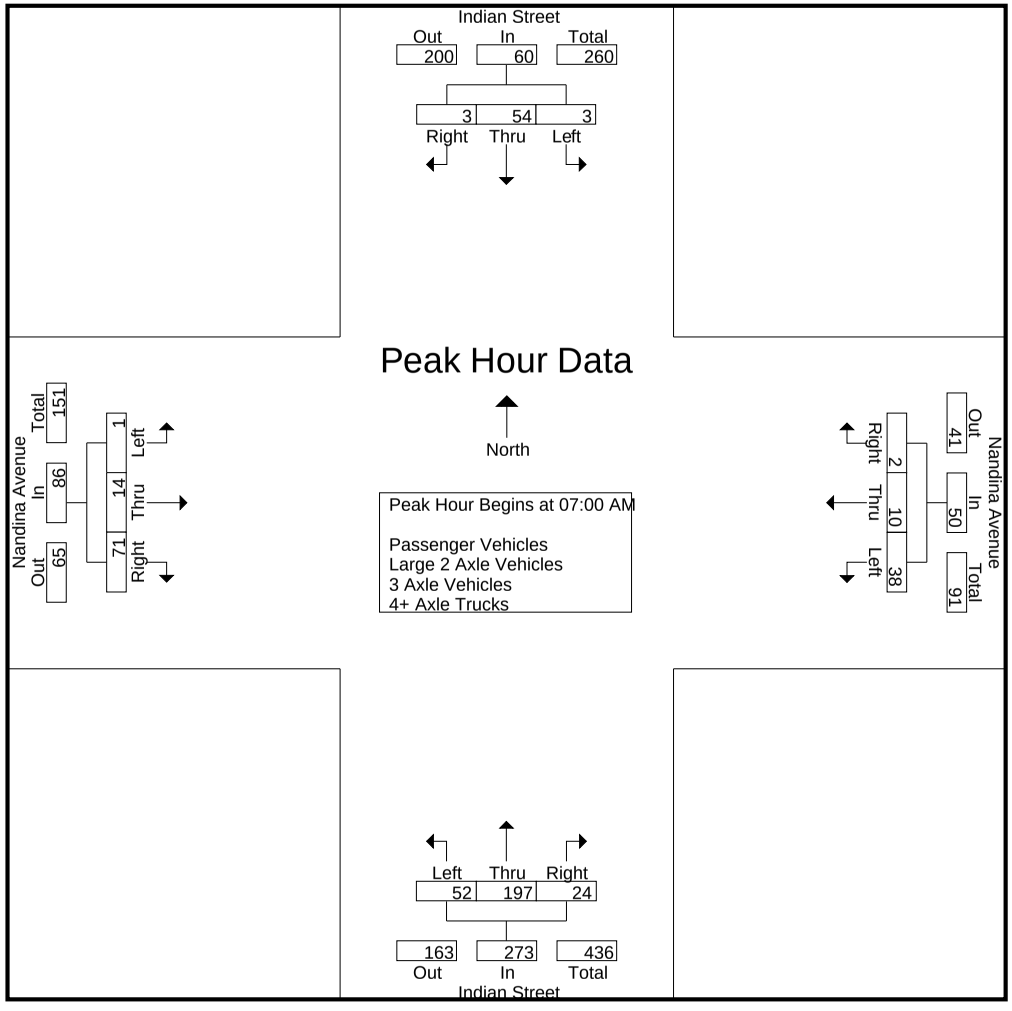

Counts Unlimited
PO Box 1178
Corona, CA 92878
(951) 268-6268

City of Moreno Valley
N/S: Indian Street
E/W: Nandina Avenue
Weather: Clear

File Name : MRVINNAAM
Site Code : 05115699
Start Date : 12/16/2015
Page No : 3

	Indian Street Southbound				Nandina Avenue Westbound				Indian Street Northbound				Nandina Avenue Eastbound				
Start Time	Left	Thru	Right	App. Total	Left	Thru	Right	App. Total	Left	Thru	Right	App. Total	Left	Thru	Right	App. Total	Int. Total
Peak Hour Analysis From 07:00 AM to 08:45 AM - Peak 1 of 1																	
Peak Hour for Each Approach Begins at:																	
	08:00 AM				07:00 AM				07:15 AM				07:00 AM				
+0 mins.	**3**	16	0	19	**15**	2	0	**17**	10	47	5	62	**1**	4	17	22	
+15 mins.	0	**24**	3	**27**	5	1	**1**	7	11	52	4	67	0	0	17	17	
+30 mins.	1	10	3	14	7	**6**	1	14	**18**	**59**	**11**	**88**	0	3	17	20	
+45 mins.	1	15	**4**	20	11	1	0	12	13	43	5	61	0	**7**	**20**	**27**	
Total Volume	5	65	10	80	38	10	2	50	52	201	25	278	1	14	71	86	
% App. Total	6.2	81.2	12.5		76	20	4		18.7	72.3	9		1.2	16.3	82.6		
PHF	.417	.677	.625	.741	.633	.417	.500	.735	.722	.852	.568	.790	.250	.500	.888	.796	

Counts Unlimited
PO Box 1178
Corona, CA 92878
(951) 268-6268

City of Moreno Valley
N/S: Indian Street
E/W: Nandina Avenue
Weather: Clear

File Name : MRVINNAAM
Site Code : 05115699
Start Date : 12/16/2015
Page No : 1

Groups Printed- Passenger Vehicles

	Indian Street Southbound					Nandina Avenue Westbound					Indian Street Northbound					Nandina Avenue Eastbound							
Start Time	Left	Thru	Right	RTOR	App. Total	Left	Thru	Right	RTOR	App. Total	Left	Thru	Right	RTOR	App. Total	Left	Thru	Right	RTOR	App. Total	Exclu. Total	Inclu. Total	Int. Total
07:00 AM	0	15	0	0	15	15	1	0	0	16	9	35	3	0	47	1	2	14	9	17	9	95	104
07:15 AM	0	12	1	0	13	4	0	0	0	4	7	41	4	0	52	0	0	10	9	10	9	79	88
07:30 AM	1	9	0	0	10	6	5	0	0	11	9	50	1	0	60	0	2	11	7	13	7	94	101
07:45 AM	0	9	0	0	9	5	1	0	0	6	13	59	8	3	80	0	5	13	6	18	9	113	122
Total	1	45	1	0	47	30	7	0	0	37	38	185	16	3	239	1	9	48	31	58	34	381	415
08:00 AM	0	9	0	0	9	2	1	0	0	3	4	36	3	1	43	1	3	7	7	11	8	66	74
08:15 AM	0	22	1	0	23	7	2	2	2	11	2	16	1	0	19	0	1	10	9	11	11	64	75
08:30 AM	1	8	1	0	10	2	1	1	1	4	3	28	2	0	33	0	1	8	6	9	7	56	63
08:45 AM	0	12	1	0	13	4	0	1	0	5	0	17	2	0	19	0	0	7	5	7	5	44	49
Total	1	51	3	0	55	15	4	4	3	23	9	97	8	1	114	1	5	32	27	38	31	230	261
Grand Total	2	96	4	0	102	45	11	4	3	60	47	282	24	4	353	2	14	80	58	96	65	611	676
Apprch %	2	94.1	3.9			75	18.3	6.7			13.3	79.9	6.8			2.1	14.6	83.3					
Total %	0.3	15.7	0.7		16.7	7.4	1.8	0.7		9.8	7.7	46.2	3.9		57.8	0.3	2.3	13.1		15.7	9.6	90.4	

	Indian Street Southbound				Nandina Avenue Westbound				Indian Street Northbound				Nandina Avenue Eastbound				
Start Time	Left	Thru	Right	App. Total	Left	Thru	Right	App. Total	Left	Thru	Right	App. Total	Left	Thru	Right	App. Total	Int. Total
Peak Hour Analysis From 07:00 AM to 07:45 AM - Peak 1 of 1																	
Peak Hour for Entire Intersection Begins at 07:00 AM																	
07:00 AM	0	**15**	0	**15**	**15**	1	0	**16**	9	35	3	47	**1**	2	**14**	17	95
07:15 AM	0	12	**1**	13	4	0	0	4	7	41	4	52	0	0	10	10	79
07:30 AM	**1**	9	0	10	6	**5**	0	11	9	50	1	60	0	2	11	13	94
07:45 AM	0	9	0	9	5	1	0	6	**13**	**59**	**8**	**80**	0	**5**	13	**18**	**113**
Total Volume	1	45	1	47	30	7	0	37	38	185	16	239	1	9	48	58	381
% App. Total	2.1	95.7	2.1		81.1	18.9	0		15.9	77.4	6.7		1.7	15.5	82.8		
PHF	.250	.750	.250	.783	.500	.350	.000	.578	.731	.784	.500	.747	.250	.450	.857	.806	.843

Counts Unlimited
PO Box 1178
Corona, CA 92878
(951) 268-6268

City of Moreno Valley
N/S: Indian Street
E/W: Nandina Avenue
Weather: Clear

File Name : MRVINNAAM
Site Code : 05115699
Start Date : 12/16/2015
Page No : 2

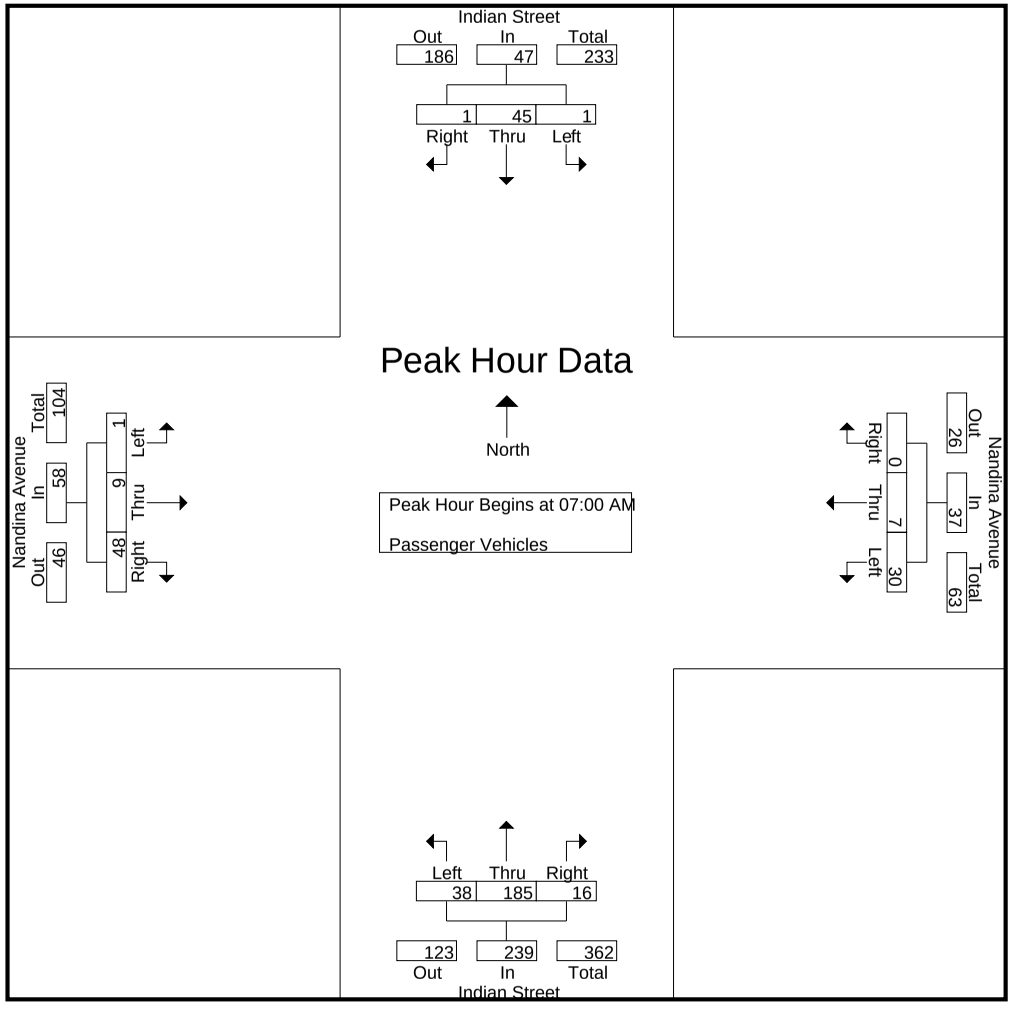

Counts Unlimited
PO Box 1178
Corona, CA 92878
(951) 268-6268

City of Moreno Valley
N/S: Indian Street
E/W: Nandina Avenue
Weather: Clear

File Name : MRVINNAAM
Site Code : 05115699
Start Date : 12/16/2015
Page No : 3

	Indian Street Southbound				Nandina Avenue Westbound				Indian Street Northbound				Nandina Avenue Eastbound				
Start Time	Left	Thru	Right	App. Total	Left	Thru	Right	App. Total	Left	Thru	Right	App. Total	Left	Thru	Right	App. Total	Int. Total
Peak Hour Analysis From 07:00 AM to 07:45 AM - Peak 1 of 1																	
Peak Hour for Each Approach Begins at:																	
	07:00 AM				07:00 AM				07:00 AM				07:00 AM				
+0 mins.	0	**15**	0	**15**	**15**	1	0	**16**	9	35	3	47	**1**	2	**14**	17	
+15 mins.	0	12	**1**	13	4	0	0	4	7	41	4	52	0	0	10	10	
+30 mins.	**1**	9	0	10	6	**5**	0	11	9	50	1	60	0	2	11	13	
+45 mins.	0	9	0	9	5	1	0	6	**13**	**59**	**8**	**80**	0	**5**	13	**18**	
Total Volume	1	45	1	47	30	7	0	37	38	185	16	239	1	9	48	58	
% App. Total	2.1	95.7	2.1		81.1	18.9	0		15.9	77.4	6.7		1.7	15.5	82.8		
PHF	.250	.750	.250	.783	.500	.350	.000	.578	.731	.784	.500	.747	.250	.450	.857	.806	

Counts Unlimited
PO Box 1178
Corona, CA 92878
(951) 268-6268

City of Moreno Valley
N/S: Indian Street
E/W: Nandina Avenue
Weather: Clear

File Name : MRVINNAAM
Site Code : 05115699
Start Date : 12/16/2015
Page No : 1

Groups Printed- Large 2 Axle Vehicles

	Indian Street Southbound					Nandina Avenue Westbound					Indian Street Northbound					Nandina Avenue Eastbound							
Start Time	Left	Thru	Right	RTOR	App. Total	Left	Thru	Right	RTOR	App. Total	Left	Thru	Right	RTOR	App. Total	Left	Thru	Right	RTOR	App. Total	Exclu. Total	Inclu. Total	Int. Total
07:00 AM	1	0	0	0	1	0	0	0	0	0	0	0	0	0	0	0	0	0	0	0	0	1	1
07:15 AM	0	0	1	0	1	0	0	0	0	0	1	4	1	0	6	0	0	1	1	1	1	8	9
07:30 AM	0	1	1	1	2	0	1	0	0	1	1	1	0	0	2	0	0	2	2	2	3	7	10
07:45 AM	0	4	0	0	4	1	0	0	0	1	1	0	3	1	4	0	1	2	2	3	3	12	15
Total	1	5	2	1	8	1	1	0	0	2	3	5	4	1	12	0	1	5	5	6	7	28	35
08:00 AM	0	2	0	0	2	1	3	0	0	4	0	2	1	0	3	0	1	3	1	4	1	13	14
08:15 AM	0	1	0	0	1	1	0	0	0	1	0	2	0	0	2	0	1	1	0	2	0	6	6
08:30 AM	0	0	1	0	1	0	0	0	0	0	1	1	3	1	5	1	0	0	0	1	1	7	8
08:45 AM	0	2	0	0	2	1	0	0	0	1	0	1	0	0	1	0	1	0	0	1	0	5	5
Total	0	5	1	0	6	3	3	0	0	6	1	6	4	1	11	1	3	4	1	8	2	31	33
Grand Total	1	10	3	1	14	4	4	0	0	8	4	11	8	2	23	1	4	9	6	14	9	59	68
Apprch %	7.1	71.4	21.4			50	50	0			17.4	47.8	34.8			7.1	28.6	64.3					
Total %	1.7	16.9	5.1		23.7	6.8	6.8	0		13.6	6.8	18.6	13.6		39	1.7	6.8	15.3		23.7	13.2	86.8	

	Indian Street Southbound				Nandina Avenue Westbound				Indian Street Northbound				Nandina Avenue Eastbound				
Start Time	Left	Thru	Right	App. Total	Left	Thru	Right	App. Total	Left	Thru	Right	App. Total	Left	Thru	Right	App. Total	Int. Total
Peak Hour Analysis From 07:00 AM to 07:45 AM - Peak 1 of 1																	
Peak Hour for Entire Intersection Begins at 07:00 AM																	
07:00 AM	**1**	0	0	1	0	0	0	0	0	0	0	0	0	0	0	0	1
07:15 AM	0	0	**1**	1	0	0	0	0	**1**	**4**	1	**6**	0	0	1	1	8
07:30 AM	0	1	1	2	0	**1**	0	**1**	1	1	0	2	0	0	**2**	2	7
07:45 AM	0	**4**	0	**4**	**1**	0	0	1	1	0	**3**	4	0	**1**	2	**3**	**12**
Total Volume	1	5	2	8	1	1	0	2	3	5	4	12	0	1	5	6	28
% App. Total	12.5	62.5	25		50	50	0		25	41.7	33.3		0	16.7	83.3		
PHF	.250	.313	.500	.500	.250	.250	.000	.500	.750	.313	.333	.500	.000	.250	.625	.500	.583

Counts Unlimited
PO Box 1178
Corona, CA 92878
(951) 268-6268

City of Moreno Valley
N/S: Indian Street
E/W: Nandina Avenue
Weather: Clear

File Name : MRVINNAAM
Site Code : 05115699
Start Date : 12/16/2015
Page No : 2

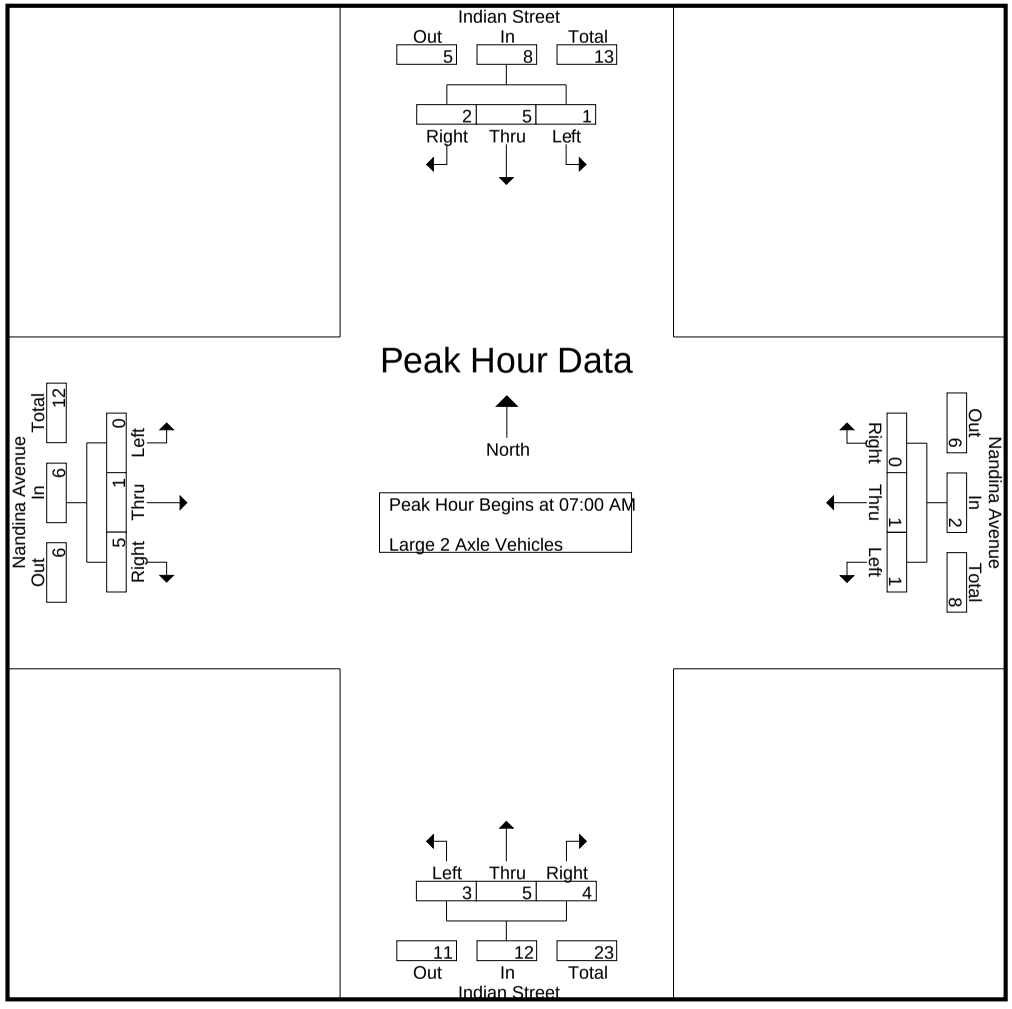

Counts Unlimited
PO Box 1178
Corona, CA 92878
(951) 268-6268

City of Moreno Valley
N/S: Indian Street
E/W: Nandina Avenue
Weather: Clear

File Name : MRVINNAAM
Site Code : 05115699
Start Date : 12/16/2015
Page No : 3

	Indian Street Southbound				Nandina Avenue Westbound				Indian Street Northbound				Nandina Avenue Eastbound				
Start Time	Left	Thru	Right	App. Total	Left	Thru	Right	App. Total	Left	Thru	Right	App. Total	Left	Thru	Right	App. Total	Int. Total
Peak Hour Analysis From 07:00 AM to 07:45 AM - Peak 1 of 1																	
Peak Hour for Each Approach Begins at:																	
	07:00 AM				07:00 AM				07:00 AM				07:00 AM				
+0 mins.	**1**	0	0	1	0	0	0	0	0	0	0	0	0	0	0	0	
+15 mins.	0	0	**1**	1	0	0	0	0	**1**	**4**	1	**6**	0	0	1	1	
+30 mins.	0	1	1	2	0	**1**	0	**1**	1	1	0	2	0	0	**2**	2	
+45 mins.	0	**4**	0	**4**	**1**	0	0	1	1	0	**3**	4	0	**1**	2	**3**	
Total Volume	1	5	2	8	1	1	0	2	3	5	4	12	0	1	5	6	
% App. Total	12.5	62.5	25		50	50	0		25	41.7	33.3		0	16.7	83.3		
PHF	.250	.313	.500	.500	.250	.250	.000	.500	.750	.313	.333	.500	.000	.250	.625	.500	

Counts Unlimited
PO Box 1178
Corona, CA 92878
(951) 268-6268

City of Moreno Valley
N/S: Indian Street
E/W: Nandina Avenue
Weather: Clear

File Name : MRVINNAAM
Site Code : 05115699
Start Date : 12/16/2015
Page No : 1

Groups Printed- 3 Axle Vehicles

	Indian Street Southbound					Nandina Avenue Westbound					Indian Street Northbound					Nandina Avenue Eastbound							
Start Time	Left	Thru	Right	RTOR	App. Total	Left	Thru	Right	RTOR	App. Total	Left	Thru	Right	RTOR	App. Total	Left	Thru	Right	RTOR	App. Total	Exclu. Total	Inclu. Total	Int. Total
07:00 AM	0	0	0	0	0	0	0	0	0	0	2	0	0	0	2	0	1	0	0	1	0	3	3
07:15 AM	0	1	0	0	1	0	0	1	1	1	1	0	0	0	1	0	0	1	1	1	2	4	6
07:30 AM	0	1	0	0	1	0	0	0	0	0	1	0	1	1	2	0	0	0	0	0	1	3	4
07:45 AM	0	0	0	0	0	3	0	0	0	3	1	0	0	0	1	0	0	2	2	2	2	6	8
Total	0	2	0	0	2	3	0	1	1	4	5	0	1	1	6	0	1	3	3	4	5	16	21
08:00 AM	1	1	0	0	2	1	0	0	0	1	2	1	1	1	4	0	0	0	0	0	1	7	8
08:15 AM	0	0	1	1	1	0	0	2	2	2	1	0	0	0	1	0	0	1	0	1	3	5	8
08:30 AM	0	1	0	0	1	0	0	0	0	0	0	1	1	0	2	0	0	2	1	2	1	5	6
08:45 AM	1	0	0	0	1	1	0	0	0	1	1	0	1	0	2	0	0	3	3	3	3	7	10
Total	2	2	1	1	5	2	0	2	2	4	4	2	3	1	9	0	0	6	4	6	8	24	32
Grand Total	2	4	1	1	7	5	0	3	3	8	9	2	4	2	15	0	1	9	7	10	13	40	53
Apprch %	28.6	57.1	14.3			62.5	0	37.5			60	13.3	26.7			0	10	90					
Total %	5	10	2.5		17.5	12.5	0	7.5		20	22.5	5	10		37.5	0	2.5	22.5		25	24.5	75.5	

	Indian Street Southbound				Nandina Avenue Westbound				Indian Street Northbound				Nandina Avenue Eastbound				
Start Time	Left	Thru	Right	App. Total	Left	Thru	Right	App. Total	Left	Thru	Right	App. Total	Left	Thru	Right	App. Total	Int. Total
Peak Hour Analysis From 07:00 AM to 07:45 AM - Peak 1 of 1																	
Peak Hour for Entire Intersection Begins at 07:00 AM																	
07:00 AM	0	0	0	0	0	0	0	0	**2**	0	0	**2**	0	**1**	0	1	3
07:15 AM	0	**1**	0	**1**	0	0	**1**	1	1	0	0	1	0	0	1	1	4
07:30 AM	0	1	0	1	0	0	0	0	1	0	**1**	2	0	0	0	0	3
07:45 AM	0	0	0	0	**3**	0	0	**3**	1	0	0	1	0	0	**2**	**2**	**6**
Total Volume	0	2	0	2	3	0	1	4	5	0	1	6	0	1	3	4	16
% App. Total	0	100	0		75	0	25		83.3	0	16.7		0	25	75		
PHF	.000	.500	.000	.500	.250	.000	.250	.333	.625	.000	.250	.750	.000	.250	.375	.500	.667

Counts Unlimited
PO Box 1178
Corona, CA 92878
(951) 268-6268

City of Moreno Valley
N/S: Indian Street
E/W: Nandina Avenue
Weather: Clear

File Name : MRVINNAAM
Site Code : 05115699
Start Date : 12/16/2015
Page No : 2

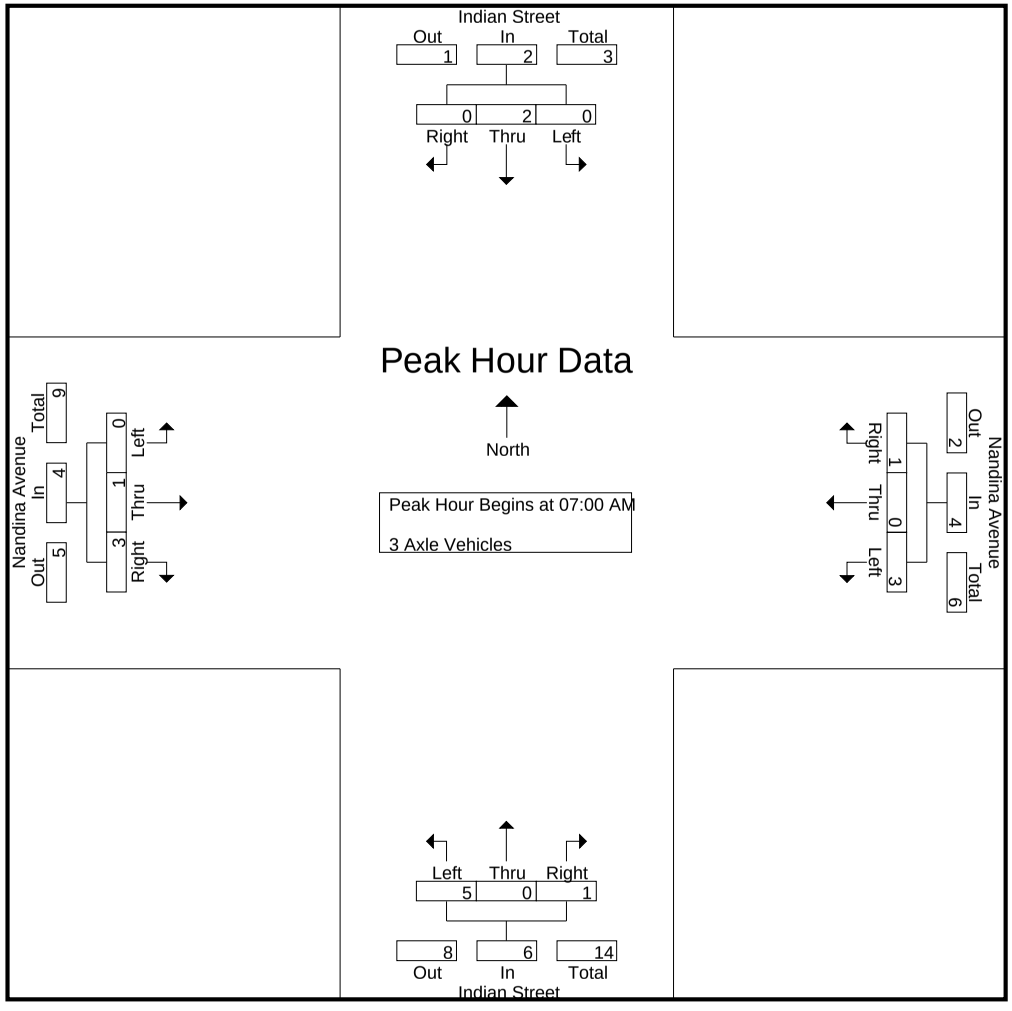

Counts Unlimited
PO Box 1178
Corona, CA 92878
(951) 268-6268

City of Moreno Valley
N/S: Indian Street
E/W: Nandina Avenue
Weather: Clear

File Name : MRVINNAAM
Site Code : 05115699
Start Date : 12/16/2015
Page No : 3

	Indian Street Southbound				Nandina Avenue Westbound				Indian Street Northbound				Nandina Avenue Eastbound				
Start Time	Left	Thru	Right	App. Total	Left	Thru	Right	App. Total	Left	Thru	Right	App. Total	Left	Thru	Right	App. Total	Int. Total
Peak Hour Analysis From 07:00 AM to 07:45 AM - Peak 1 of 1																	
Peak Hour for Each Approach Begins at:																	
	07:00 AM				07:00 AM				07:00 AM				07:00 AM				
+0 mins.	0	0	0	0	0	0	0	0	**2**	0	0	**2**	0	**1**	0	1	
+15 mins.	0	**1**	0	**1**	0	0	**1**	1	1	0	0	1	0	0	1	1	
+30 mins.	0	1	0	1	0	0	0	0	1	0	**1**	2	0	0	0	0	
+45 mins.	0	0	0	0	**3**	0	0	**3**	1	0	0	1	0	0	**2**	**2**	
Total Volume	0	2	0	2	3	0	1	4	5	0	1	6	0	1	3	4	
% App. Total	0	100	0		75	0	25		83.3	0	16.7		0	25	75		
PHF	.000	.500	.000	.500	.250	.000	.250	.333	.625	.000	.250	.750	.000	.250	.375	.500	

Counts Unlimited
PO Box 1178
Corona, CA 92878
(951) 268-6268

City of Moreno Valley
N/S: Indian Street
E/W: Nandina Avenue
Weather: Clear

File Name : MRVINNAAM
Site Code : 05115699
Start Date : 12/16/2015
Page No : 1

Groups Printed- 4+ Axle Trucks

	Indian Street Southbound					Nandina Avenue Westbound					Indian Street Northbound					Nandina Avenue Eastbound							
Start Time	Left	Thru	Right	RTOR	App. Total	Left	Thru	Right	RTOR	App. Total	Left	Thru	Right	RTOR	App. Total	Left	Thru	Right	RTOR	App. Total	Exclu. Total	Inclu. Total	Int. Total
07:00 AM	0	2	0	0	2	0	1	0	0	1	2	4	1	1	7	0	1	3	0	4	1	14	15
07:15 AM	0	0	0	0	0	1	1	0	0	2	1	2	0	0	3	0	0	5	4	5	4	10	14
07:30 AM	1	0	0	0	1	1	0	1	0	2	0	1	2	0	3	0	1	4	1	5	1	11	12
07:45 AM	0	0	0	0	0	2	0	0	0	2	3	0	0	0	3	0	1	3	0	4	0	9	9
Total	1	2	0	0	3	4	2	1	0	7	6	7	3	1	16	0	3	15	5	18	6	44	50
08:00 AM	2	4	0	0	6	0	0	0	0	0	7	4	0	0	11	0	1	2	1	3	1	20	21
08:15 AM	0	1	1	1	2	0	1	1	1	2	3	0	0	0	3	0	0	2	1	2	3	9	12
08:30 AM	0	1	1	0	2	0	0	0	0	0	9	3	0	0	12	1	2	2	1	5	1	19	20
08:45 AM	0	1	3	2	4	1	2	0	0	3	2	1	2	0	5	1	1	4	2	6	4	18	22
Total	2	7	5	3	14	1	3	1	1	5	21	8	2	0	31	2	4	10	5	16	9	66	75
Grand Total	3	9	5	3	17	5	5	2	1	12	27	15	5	1	47	2	7	25	10	34	15	110	125
Apprch %	17.6	52.9	29.4			41.7	41.7	16.7			57.4	31.9	10.6			5.9	20.6	73.5					
Total %	2.7	8.2	4.5		15.5	4.5	4.5	1.8		10.9	24.5	13.6	4.5		42.7	1.8	6.4	22.7		30.9	12	88	

	Indian Street Southbound				Nandina Avenue Westbound				Indian Street Northbound				Nandina Avenue Eastbound				
Start Time	Left	Thru	Right	App. Total	Left	Thru	Right	App. Total	Left	Thru	Right	App. Total	Left	Thru	Right	App. Total	Int. Total
Peak Hour Analysis From 07:00 AM to 07:45 AM - Peak 1 of 1																	
Peak Hour for Entire Intersection Begins at 07:00 AM																	
07:00 AM	0	**2**	0	**2**	0	**1**	0	1	2	**4**	1	**7**	0	**1**	3	4	**14**
07:15 AM	0	0	0	0	1	1	0	**2**	1	2	0	3	0	0	**5**	**5**	10
07:30 AM	**1**	0	0	1	1	0	**1**	2	0	1	**2**	3	0	1	4	5	11
07:45 AM	0	0	0	0	**2**	0	0	2	**3**	0	0	3	0	1	3	4	9
Total Volume	1	2	0	3	4	2	1	7	6	7	3	16	0	3	15	18	44
% App. Total	33.3	66.7	0		57.1	28.6	14.3		37.5	43.8	18.8		0	16.7	83.3		
PHF	.250	.250	.000	.375	.500	.500	.250	.875	.500	.438	.375	.571	.000	.750	.750	.900	.786

Counts Unlimited
PO Box 1178
Corona, CA 92878
(951) 268-6268

City of Moreno Valley
N/S: Indian Street
E/W: Nandina Avenue
Weather: Clear

File Name : MRVINNAAM
Site Code : 05115699
Start Date : 12/16/2015
Page No : 2

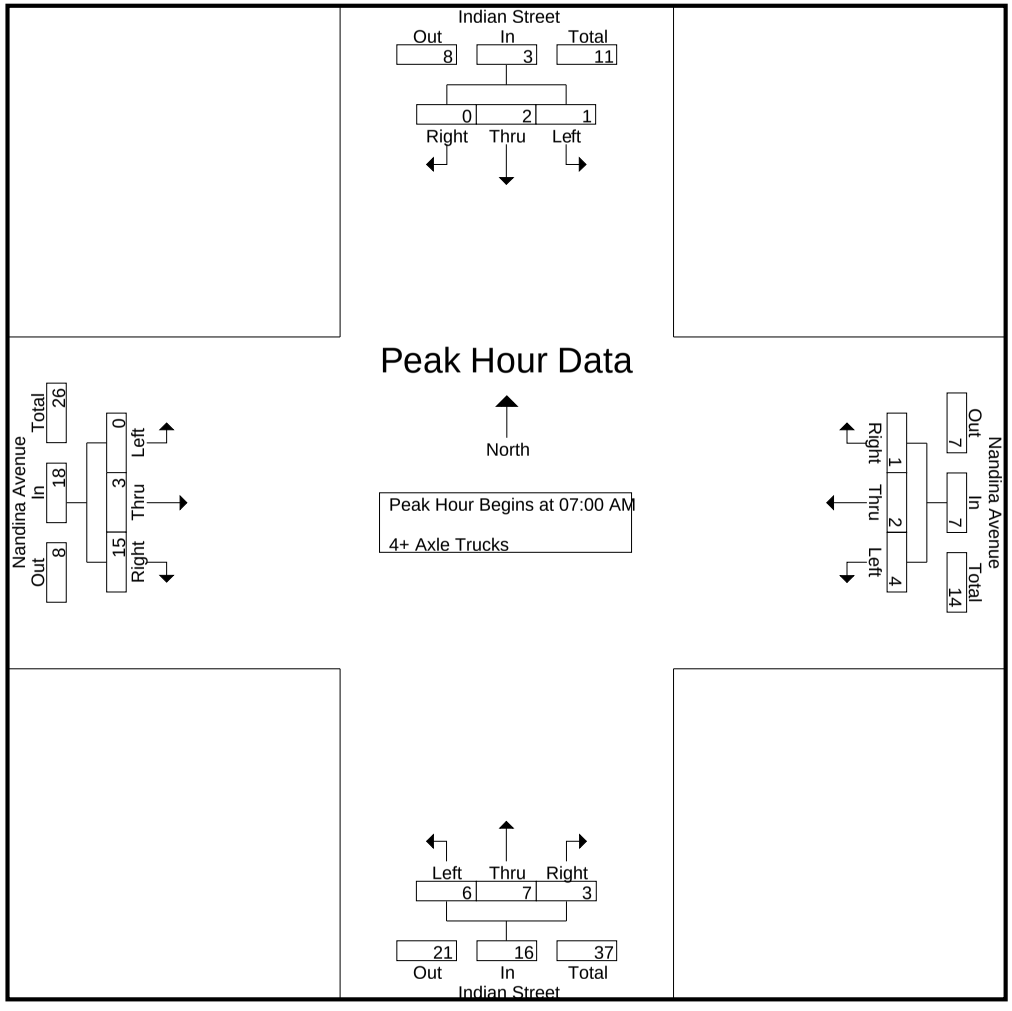

Counts Unlimited
PO Box 1178
Corona, CA 92878
(951) 268-6268

City of Moreno Valley
N/S: Indian Street
E/W: Nandina Avenue
Weather: Clear

File Name : MRVINNAAM
Site Code : 05115699
Start Date : 12/16/2015
Page No : 3

	Indian Street Southbound				Nandina Avenue Westbound				Indian Street Northbound				Nandina Avenue Eastbound				
Start Time	Left	Thru	Right	App. Total	Left	Thru	Right	App. Total	Left	Thru	Right	App. Total	Left	Thru	Right	App. Total	Int. Total
Peak Hour Analysis From 07:00 AM to 07:45 AM - Peak 1 of 1																	
Peak Hour for Each Approach Begins at:																	
	07:00 AM				07:00 AM				07:00 AM				07:00 AM				
+0 mins.	0	**2**	0	**2**	0	**1**	0	1	2	**4**	1	**7**	0	**1**	3	4	
+15 mins.	0	0	0	0	1	1	0	**2**	1	2	0	3	0	0	**5**	**5**	
+30 mins.	**1**	0	0	1	1	0	**1**	2	0	1	**2**	3	0	1	4	5	
+45 mins.	0	0	0	0	**2**	0	0	2	**3**	0	0	3	0	1	3	4	
Total Volume	1	2	0	3	4	2	1	7	6	7	3	16	0	3	15	18	
% App. Total	33.3	66.7	0		57.1	28.6	14.3		37.5	43.8	18.8		0	16.7	83.3		
PHF	.250	.250	.000	.375	.500	.500	.250	.875	.500	.438	.375	.571	.000	.750	.750	.900	

Counts Unlimited
PO Box 1178
Corona, CA 92878
(951) 268-6268

City of Moreno Valley
N/S: Indian Street
E/W: Nandina Avenue
Weather: Clear

File Name : MRVINNAPM
Site Code : 05115699
Start Date : 12/16/2015
Page No : 1

Groups Printed- Passenger Vehicles - Large 2 Axle Vehicles - 3 Axle Vehicles - 4+ Axle Trucks

	Indian Street Southbound					Nandina Avenue Westbound					Indian Street Northbound					Nandina Avenue Eastbound							
Start Time	Left	Thru	Right	RTOR	App. Total	Left	Thru	Right	RTOR	App. Total	Left	Thru	Right	RTOR	App. Total	Left	Thru	Right	RTOR	App. Total	Exclu. Total	Inclu. Total	Int. Total
04:00 PM	4	20	9	3	33	9	1	1	1	11	20	47	5	0	72	1	11	30	19	42	23	158	181
04:15 PM	4	16	6	4	26	11	10	7	5	28	21	66	5	4	92	5	11	33	19	49	32	195	227
04:30 PM	23	89	14	6	126	14	4	11	9	29	28	71	14	8	113	8	16	66	39	90	62	358	420
04:45 PM	28	86	13	8	127	14	4	10	10	28	18	72	11	6	101	1	27	90	41	118	65	374	439
Total	59	211	42	21	312	48	19	29	25	96	87	256	35	18	378	15	65	219	118	299	182	1085	1267
05:00 PM	9	24	9	6	42	17	4	2	1	23	16	51	13	8	80	1	22	42	30	65	45	210	255
05:15 PM	3	23	7	6	33	19	7	2	0	28	7	57	3	0	67	2	7	37	26	46	32	174	206
05:30 PM	2	51	3	2	56	9	1	5	4	15	10	100	7	2	117	6	25	106	59	137	67	325	392
05:45 PM	6	30	6	4	42	3	8	8	6	19	25	106	2	1	133	3	26	84	50	113	61	307	368
Total	20	128	25	18	173	48	20	17	11	85	58	314	25	11	397	12	80	269	165	361	205	1016	1221
Grand Total	79	339	67	39	485	96	39	46	36	181	145	570	60	29	775	27	145	488	283	660	387	2101	2488
Apprch %	16.3	69.9	13.8			53	21.5	25.4			18.7	73.5	7.7			4.1	22	73.9					
Total %	3.8	16.1	3.2		23.1	4.6	1.9	2.2		8.6	6.9	27.1	2.9		36.9	1.3	6.9	23.2		31.4	15.6	84.4	
Passenger Vehicles	78	323	39		459	63	33	42		171	136	545	52		760	24	136	468		899	0	0	2289
% Passenger Vehicles	98.7	95.3	58.2	48.7	87.6	65.6	84.6	91.3	91.7	78.8	93.8	95.6	86.7	93.1	94.5	88.9	93.8	95.9	95.8	95.3	0	0	92
Large 2 Axle Vehicles	0	5	22		42	2	1	2		6	1	5	1		7	1	2	3		7	0	0	62
% Large 2 Axle Vehicles	0	1.5	32.8	38.5	8	2.1	2.6	4.3	2.8	2.8	0.7	0.9	1.7	0	0.9	3.7	1.4	0.6	0.4	0.7	0	0	2.5
3 Axle Vehicles	1	3	2		8	5	3	1		10	1	14	3		18	2	2	4		11	0	0	47
% 3 Axle Vehicles	1.3	0.9	3	5.1	1.5	5.2	7.7	2.2	2.8	4.6	0.7	2.5	5	0	2.2	7.4	1.4	0.8	1.1	1.2	0	0	1.9
4+ Axle Trucks	0	8	4		15	26	2	1		30	7	6	4		19	0	5	13		26	0	0	90
% 4+ Axle Trucks	0	2.4	6	7.7	2.9	27.1	5.1	2.2	2.8	13.8	4.8	1.1	6.7	6.9	2.4	0	3.4	2.7	2.8	2.8	0	0	3.6

	Indian Street Southbound				Nandina Avenue Westbound				Indian Street Northbound				Nandina Avenue Eastbound				
Start Time	Left	Thru	Right	App. Total	Left	Thru	Right	App. Total	Left	Thru	Right	App. Total	Left	Thru	Right	App. Total	Int. Total
Peak Hour Analysis From 04:00 PM to 05:45 PM - Peak 1 of 1																	
Peak Hour for Entire Intersection Begins at 04:15 PM																	
04:15 PM	4	16	6	26	11	**10**	7	28	21	66	5	92	5	11	33	49	195
04:30 PM	23	**89**	**14**	126	14	4	**11**	**29**	**28**	71	**14**	**113**	**8**	16	66	90	358
04:45 PM	**28**	86	13	**127**	14	4	10	28	18	**72**	11	101	1	**27**	**90**	**118**	**374**
05:00 PM	9	24	9	42	**17**	4	2	23	16	51	13	80	1	22	42	65	210
Total Volume	64	215	42	321	56	22	30	108	83	260	43	386	15	76	231	322	1137
% App. Total	19.9	67	13.1		51.9	20.4	27.8		21.5	67.4	11.1		4.7	23.6	71.7		
PHF	.571	.604	.750	.632	.824	.550	.682	.931	.741	.903	.768	.854	.469	.704	.642	.682	.760

Counts Unlimited
PO Box 1178
Corona, CA 92878
(951) 268-6268

City of Moreno Valley
N/S: Indian Street
E/W: Nandina Avenue
Weather: Clear

File Name : MRVINNAPM
Site Code : 05115699
Start Date : 12/16/2015
Page No : 2

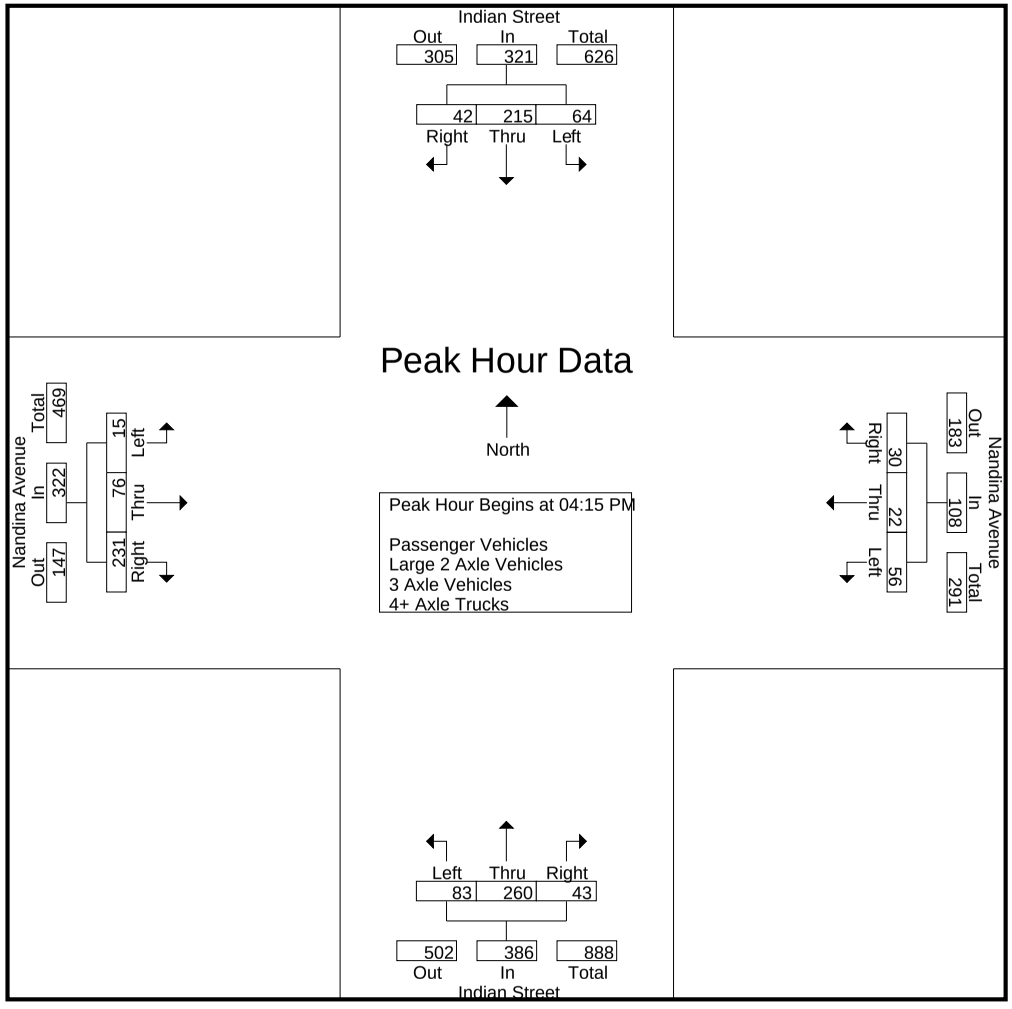

Counts Unlimited
PO Box 1178
Corona, CA 92878
(951) 268-6268

City of Moreno Valley
N/S: Indian Street
E/W: Nandina Avenue
Weather: Clear

File Name : MRVINNAPM
Site Code : 05115699
Start Date : 12/16/2015
Page No : 3

	Indian Street Southbound				Nandina Avenue Westbound				Indian Street Northbound				Nandina Avenue Eastbound				
Start Time	Left	Thru	Right	App. Total	Left	Thru	Right	App. Total	Left	Thru	Right	App. Total	Left	Thru	Right	App. Total	Int. Total
Peak Hour Analysis From 04:00 PM to 05:45 PM - Peak 1 of 1																	
Peak Hour for Each Approach Begins at:																	
	04:30 PM				04:15 PM				05:00 PM				04:45 PM				
+0 mins.	23	**89**	**14**	126	11	**10**	7	28	16	51	**13**	80	1	**27**	90	118	
+15 mins.	**28**	86	13	**127**	14	4	**11**	**29**	7	57	3	67	1	22	42	65	
+30 mins.	9	24	9	42	14	4	10	28	10	100	7	117	2	7	37	46	
+45 mins.	3	23	7	33	**17**	4	2	23	**25**	**106**	2	**133**	**6**	25	**106**	**137**	
Total Volume	63	222	43	328	56	22	30	108	58	314	25	397	10	81	275	366	
% App. Total	19.2	67.7	13.1		51.9	20.4	27.8		14.6	79.1	6.3		2.7	22.1	75.1		
PHF	.563	.624	.768	.646	.824	.550	.682	.931	.580	.741	.481	.746	.417	.750	.649	.668	

Counts Unlimited
PO Box 1178
Corona, CA 92878
(951) 268-6268

City of Moreno Valley
N/S: Indian Street
E/W: Nandina Avenue
Weather: Clear

File Name : MRVINNAPM
Site Code : 05115699
Start Date : 12/16/2015
Page No : 1

Groups Printed- Passenger Vehicles

	Indian Street Southbound					Nandina Avenue Westbound					Indian Street Northbound					Nandina Avenue Eastbound							
Start Time	Left	Thru	Right	RTOR	App. Total	Left	Thru	Right	RTOR	App. Total	Left	Thru	Right	RTOR	App. Total	Left	Thru	Right	RTOR	App. Total	Exclu. Total	Inclu. Total	Int. Total
04:00 PM	4	19	6	1	29	7	1	1	1	9	16	44	4	0	64	0	9	25	17	34	19	136	155
04:15 PM	4	14	1	0	19	6	9	6	4	21	21	63	4	4	88	4	11	27	15	42	23	170	193
04:30 PM	23	86	10	6	119	11	4	11	9	26	27	68	12	7	107	7	15	65	38	87	60	339	399
04:45 PM	28	85	9	4	122	8	3	9	9	20	15	66	11	6	92	1	25	85	38	111	57	345	402
Total	59	204	26	11	289	32	17	27	23	76	79	241	31	17	351	12	60	202	108	274	159	990	1149
05:00 PM	9	24	5	3	38	10	4	2	1	16	16	50	11	7	77	1	21	42	30	64	41	195	236
05:15 PM	3	20	3	2	26	13	4	2	0	19	7	55	2	0	64	2	6	36	25	44	27	153	180
05:30 PM	2	48	2	1	52	6	1	3	3	10	10	96	7	2	113	6	24	105	58	135	64	310	374
05:45 PM	5	27	3	2	35	2	7	8	6	17	24	103	1	1	128	3	25	83	50	111	59	291	350
Total	19	119	13	8	151	31	16	15	10	62	57	304	21	10	382	12	76	266	163	354	191	949	1140
Grand Total	78	323	39	19	440	63	33	42	33	138	136	545	52	27	733	24	136	468	271	628	350	1939	2289
Apprch %	17.7	73.4	8.9			45.7	23.9	30.4			18.6	74.4	7.1			3.8	21.7	74.5					
Total %	4	16.7	2		22.7	3.2	1.7	2.2		7.1	7	28.1	2.7		37.8	1.2	7	24.1		32.4	15.3	84.7	

	Indian Street Southbound				Nandina Avenue Westbound				Indian Street Northbound				Nandina Avenue Eastbound				
Start Time	Left	Thru	Right	App. Total	Left	Thru	Right	App. Total	Left	Thru	Right	App. Total	Left	Thru	Right	App. Total	Int. Total
Peak Hour Analysis From 04:15 PM to 05:00 PM - Peak 1 of 1																	
Peak Hour for Entire Intersection Begins at 04:15 PM																	
04:15 PM	4	14	1	19	6	**9**	6	21	21	63	4	88	4	11	27	42	170
04:30 PM	23	**86**	**10**	119	**11**	4	**11**	**26**	**27**	**68**	**12**	**107**	**7**	15	65	87	339
04:45 PM	**28**	85	9	**122**	8	3	9	20	15	66	11	92	1	**25**	**85**	**111**	**345**
05:00 PM	9	24	5	38	10	4	2	16	16	50	11	77	1	21	42	64	195
Total Volume	64	209	25	298	35	20	28	83	79	247	38	364	13	72	219	304	1049
% App. Total	21.5	70.1	8.4		42.2	24.1	33.7		21.7	67.9	10.4		4.3	23.7	72		
PHF	.571	.608	.625	.611	.795	.556	.636	.798	.731	.908	.792	.850	.464	.720	.644	.685	.760

Counts Unlimited
PO Box 1178
Corona, CA 92878
(951) 268-6268

City of Moreno Valley
N/S: Indian Street
E/W: Nandina Avenue
Weather: Clear

File Name : MRVINNAPM
Site Code : 05115699
Start Date : 12/16/2015
Page No : 2

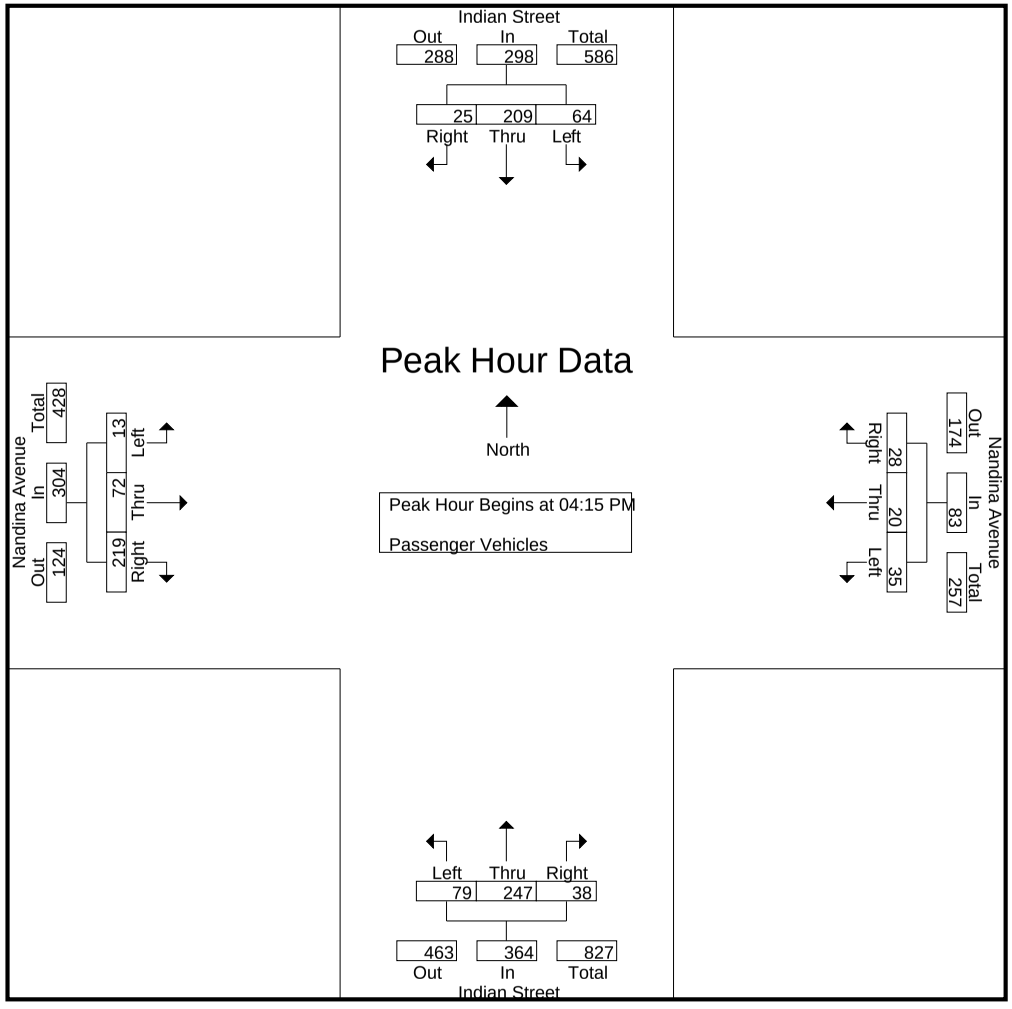

Counts Unlimited
PO Box 1178
Corona, CA 92878
(951) 268-6268

City of Moreno Valley
N/S: Indian Street
E/W: Nandina Avenue
Weather: Clear

File Name : MRVINNAPM
Site Code : 05115699
Start Date : 12/16/2015
Page No : 3

	Indian Street Southbound				Nandina Avenue Westbound				Indian Street Northbound				Nandina Avenue Eastbound				
Start Time	Left	Thru	Right	App. Total	Left	Thru	Right	App. Total	Left	Thru	Right	App. Total	Left	Thru	Right	App. Total	Int. Total
Peak Hour Analysis From 04:15 PM to 05:00 PM - Peak 1 of 1																	
Peak Hour for Each Approach Begins at:																	
	04:15 PM				04:15 PM				04:15 PM				04:15 PM				
+0 mins.	4	14	1	19	6	**9**	6	21	21	63	4	88	4	11	27	42	
+15 mins.	23	**86**	**10**	119	**11**	4	**11**	**26**	**27**	**68**	**12**	**107**	**7**	15	65	87	
+30 mins.	**28**	85	9	**122**	8	3	9	20	15	66	11	92	1	**25**	**85**	**111**	
+45 mins.	9	24	5	38	10	4	2	16	16	50	11	77	1	21	42	64	
Total Volume	64	209	25	298	35	20	28	83	79	247	38	364	13	72	219	304	
% App. Total	21.5	70.1	8.4		42.2	24.1	33.7		21.7	67.9	10.4		4.3	23.7	72		
PHF	.571	.608	.625	.611	.795	.556	.636	.798	.731	.908	.792	.850	.464	.720	.644	.685	

Counts Unlimited
PO Box 1178
Corona, CA 92878
(951) 268-6268

City of Moreno Valley
N/S: Indian Street
E/W: Nandina Avenue
Weather: Clear

File Name : MRVINNAPM
Site Code : 05115699
Start Date : 12/16/2015
Page No : 1

Groups Printed- Large 2 Axle Vehicles

	Indian Street Southbound					Nandina Avenue Westbound					Indian Street Northbound					Nandina Avenue Eastbound							
Start Time	Left	Thru	Right	RTOR	App. Total	Left	Thru	Right	RTOR	App. Total	Left	Thru	Right	RTOR	App. Total	Left	Thru	Right	RTOR	App. Total	Exclu. Total	Inclu. Total	Int. Total
04:00 PM	0	1	3	2	4	0	0	0	0	0	1	0	0	0	1	1	0	0	0	1	2	6	8
04:15 PM	0	1	3	2	4	1	0	0	0	1	0	2	0	0	2	0	0	1	0	1	2	8	10
04:30 PM	0	2	3	0	5	0	0	0	0	0	0	0	1	0	1	0	1	0	0	1	0	7	7
04:45 PM	0	0	3	3	3	0	0	0	0	0	0	0	0	0	0	0	0	1	1	1	4	4	8
Total	0	4	12	7	16	1	0	0	0	1	1	2	1	0	4	1	1	2	1	4	8	25	33
05:00 PM	0	0	3	2	3	0	0	0	0	0	0	0	0	0	0	0	1	0	0	1	2	4	6
05:15 PM	0	0	3	3	3	0	0	0	0	0	0	0	0	0	0	0	0	0	0	0	3	3	6
05:30 PM	0	1	1	1	2	1	0	2	1	3	0	2	0	0	2	0	0	0	0	0	2	7	9
05:45 PM	0	0	3	2	3	0	1	0	0	1	0	1	0	0	1	0	0	1	0	1	2	6	8
Total	0	1	10	8	11	1	1	2	1	4	0	3	0	0	3	0	1	1	0	2	9	20	29
Grand Total	0	5	22	15	27	2	1	2	1	5	1	5	1	0	7	1	2	3	1	6	17	45	62
Apprch %	0	18.5	81.5			40	20	40			14.3	71.4	14.3			16.7	33.3	50					
Total %	0	11.1	48.9		60	4.4	2.2	4.4		11.1	2.2	11.1	2.2		15.6	2.2	4.4	6.7		13.3	27.4	72.6	

	Indian Street Southbound				Nandina Avenue Westbound				Indian Street Northbound				Nandina Avenue Eastbound				
Start Time	Left	Thru	Right	App. Total	Left	Thru	Right	App. Total	Left	Thru	Right	App. Total	Left	Thru	Right	App. Total	Int. Total
Peak Hour Analysis From 04:15 PM to 05:00 PM - Peak 1 of 1																	
Peak Hour for Entire Intersection Begins at 04:15 PM																	
04:15 PM	0	1	**3**	4	**1**	0	0	**1**	0	**2**	0	**2**	0	0	**1**	**1**	**8**
04:30 PM	0	**2**	3	**5**	0	0	0	0	0	0	**1**	1	0	**1**	0	1	7
04:45 PM	0	0	3	3	0	0	0	0	0	0	0	0	0	0	1	1	4
05:00 PM	0	0	3	3	0	0	0	0	0	0	0	0	0	1	0	1	4
Total Volume	0	3	12	15	1	0	0	1	0	2	1	3	0	2	2	4	23
% App. Total	0	20	80		100	0	0		0	66.7	33.3		0	50	50		
PHF	.000	.375	1.00	.750	.250	.000	.000	.250	.000	.250	.250	.375	.000	.500	.500	1.00	.719

Counts Unlimited
PO Box 1178
Corona, CA 92878
(951) 268-6268

City of Moreno Valley
N/S: Indian Street
E/W: Nandina Avenue
Weather: Clear

File Name : MRVINNAPM
Site Code : 05115699
Start Date : 12/16/2015
Page No : 2

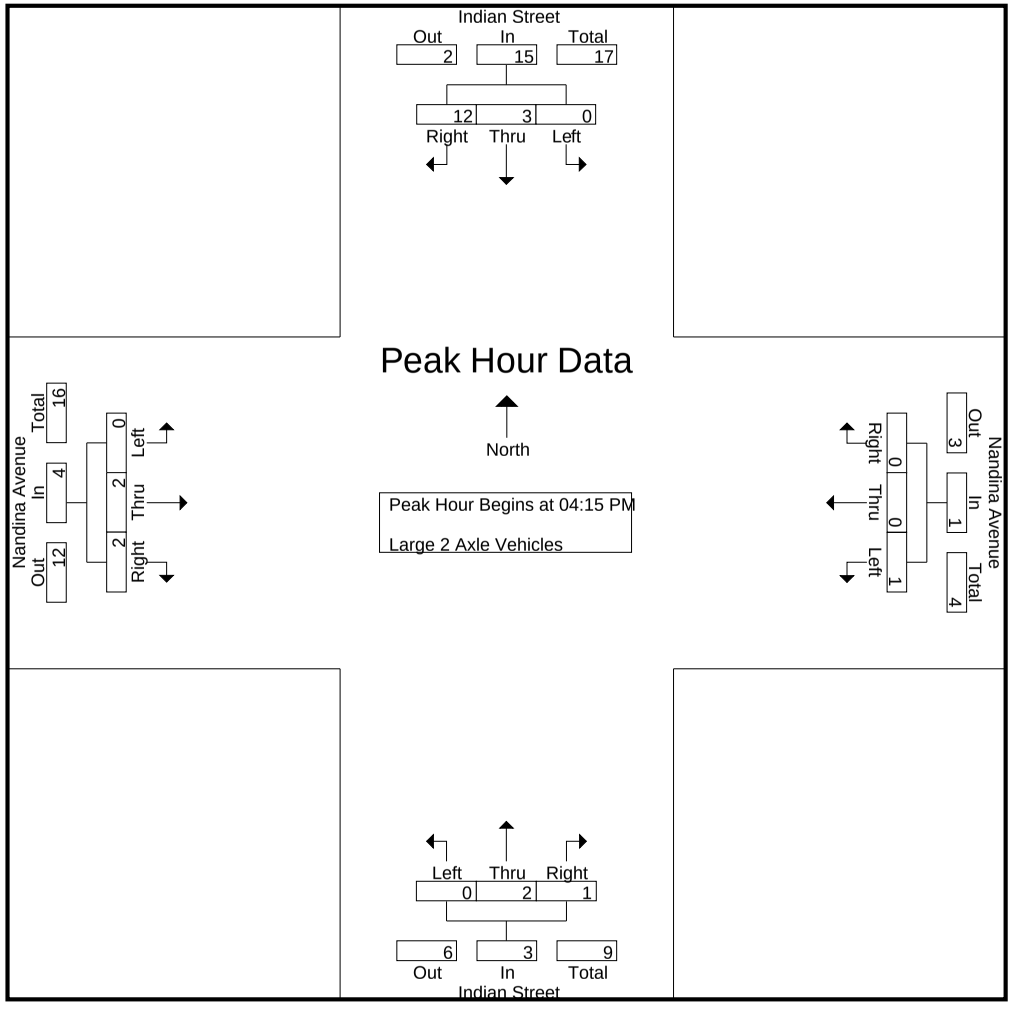

Counts Unlimited
PO Box 1178
Corona, CA 92878
(951) 268-6268

City of Moreno Valley
N/S: Indian Street
E/W: Nandina Avenue
Weather: Clear

File Name : MRVINNAPM
Site Code : 05115699
Start Date : 12/16/2015
Page No : 3

	Indian Street Southbound				Nandina Avenue Westbound				Indian Street Northbound				Nandina Avenue Eastbound				
Start Time	Left	Thru	Right	App. Total	Left	Thru	Right	App. Total	Left	Thru	Right	App. Total	Left	Thru	Right	App. Total	Int. Total
Peak Hour Analysis From 04:15 PM to 05:00 PM - Peak 1 of 1																	
Peak Hour for Each Approach Begins at:																	
	04:15 PM				04:15 PM				04:15 PM				04:15 PM				
+0 mins.	0	1	**3**	4	**1**	0	0	**1**	0	**2**	0	**2**	0	0	**1**	**1**	
+15 mins.	0	**2**	3	**5**	0	0	0	0	0	0	**1**	1	0	**1**	0	1	
+30 mins.	0	0	3	3	0	0	0	0	0	0	0	0	0	0	1	1	
+45 mins.	0	0	3	3	0	0	0	0	0	0	0	0	0	1	0	1	
Total Volume	0	3	12	15	1	0	0	1	0	2	1	3	0	2	2	4	
% App. Total	0	20	80		100	0	0		0	66.7	33.3		0	50	50		
PHF	.000	.375	1.000	.750	.250	.000	.000	.250	.000	.250	.250	.375	.000	.500	.500	1.000	

Counts Unlimited
PO Box 1178
Corona, CA 92878
(951) 268-6268

City of Moreno Valley
N/S: Indian Street
E/W: Nandina Avenue
Weather: Clear

File Name : MRVINNAPM
Site Code : 05115699
Start Date : 12/16/2015
Page No : 1

Groups Printed- 3 Axle Vehicles

	Indian Street Southbound					Nandina Avenue Westbound					Indian Street Northbound					Nandina Avenue Eastbound							
Start Time	Left	Thru	Right	RTOR	App. Total	Left	Thru	Right	RTOR	App. Total	Left	Thru	Right	RTOR	App. Total	Left	Thru	Right	RTOR	App. Total	Exclu. Total	Inclu. Total	Int. Total
04:00 PM	0	0	0	0	0	0	0	0	0	0	1	2	1	0	4	0	0	2	1	2	1	6	7
04:15 PM	0	1	1	1	2	0	1	0	0	1	0	1	0	0	1	1	0	1	1	2	2	6	8
04:30 PM	0	0	0	0	0	2	0	0	0	2	0	2	0	0	2	1	0	0	0	1	0	5	5
04:45 PM	0	0	1	1	1	0	1	1	1	2	0	3	0	0	3	0	1	1	1	2	3	8	11
Total	0	1	2	2	3	2	2	1	1	5	1	8	1	0	10	2	1	4	3	7	6	25	31
05:00 PM	0	0	0	0	0	1	0	0	0	1	0	1	1	0	2	0	0	0	0	0	0	3	3
05:15 PM	0	0	0	0	0	2	1	0	0	3	0	1	0	0	1	0	0	0	0	0	0	4	4
05:30 PM	0	1	0	0	1	0	0	0	0	0	0	2	0	0	2	0	0	0	0	0	0	3	3
05:45 PM	1	1	0	0	2	0	0	0	0	0	0	2	1	0	3	0	1	0	0	1	0	6	6
Total	1	2	0	0	3	3	1	0	0	4	0	6	2	0	8	0	1	0	0	1	0	16	16
Grand Total	1	3	2	2	6	5	3	1	1	9	1	14	3	0	18	2	2	4	3	8	6	41	47
Apprch %	16.7	50	33.3			55.6	33.3	11.1			5.6	77.8	16.7			25	25	50					
Total %	2.4	7.3	4.9		14.6	12.2	7.3	2.4		22	2.4	34.1	7.3		43.9	4.9	4.9	9.8		19.5	12.8	87.2	

	Indian Street Southbound				Nandina Avenue Westbound				Indian Street Northbound				Nandina Avenue Eastbound				
Start Time	Left	Thru	Right	App. Total	Left	Thru	Right	App. Total	Left	Thru	Right	App. Total	Left	Thru	Right	App. Total	Int. Total
Peak Hour Analysis From 04:15 PM to 05:00 PM - Peak 1 of 1																	
Peak Hour for Entire Intersection Begins at 04:15 PM																	
04:15 PM	0	**1**	**1**	**2**	0	**1**	0	1	0	1	0	1	**1**	0	**1**	**2**	6
04:30 PM	0	0	0	0	**2**	0	0	**2**	0	2	0	2	1	0	0	1	5
04:45 PM	0	0	1	1	0	1	**1**	2	0	**3**	0	**3**	0	**1**	1	2	**8**
05:00 PM	0	0	0	0	1	0	0	1	0	1	**1**	2	0	0	0	0	3
Total Volume	0	1	2	3	3	2	1	6	0	7	1	8	2	1	2	5	22
% App. Total	0	33.3	66.7		50	33.3	16.7		0	87.5	12.5		40	20	40		
PHF	.000	.250	.500	.375	.375	.500	.250	.750	.000	.583	.250	.667	.500	.250	.500	.625	.688

Counts Unlimited
PO Box 1178
Corona, CA 92878
(951) 268-6268

City of Moreno Valley
N/S: Indian Street
E/W: Nandina Avenue
Weather: Clear

File Name : MRVINNAPM
Site Code : 05115699
Start Date : 12/16/2015
Page No : 2

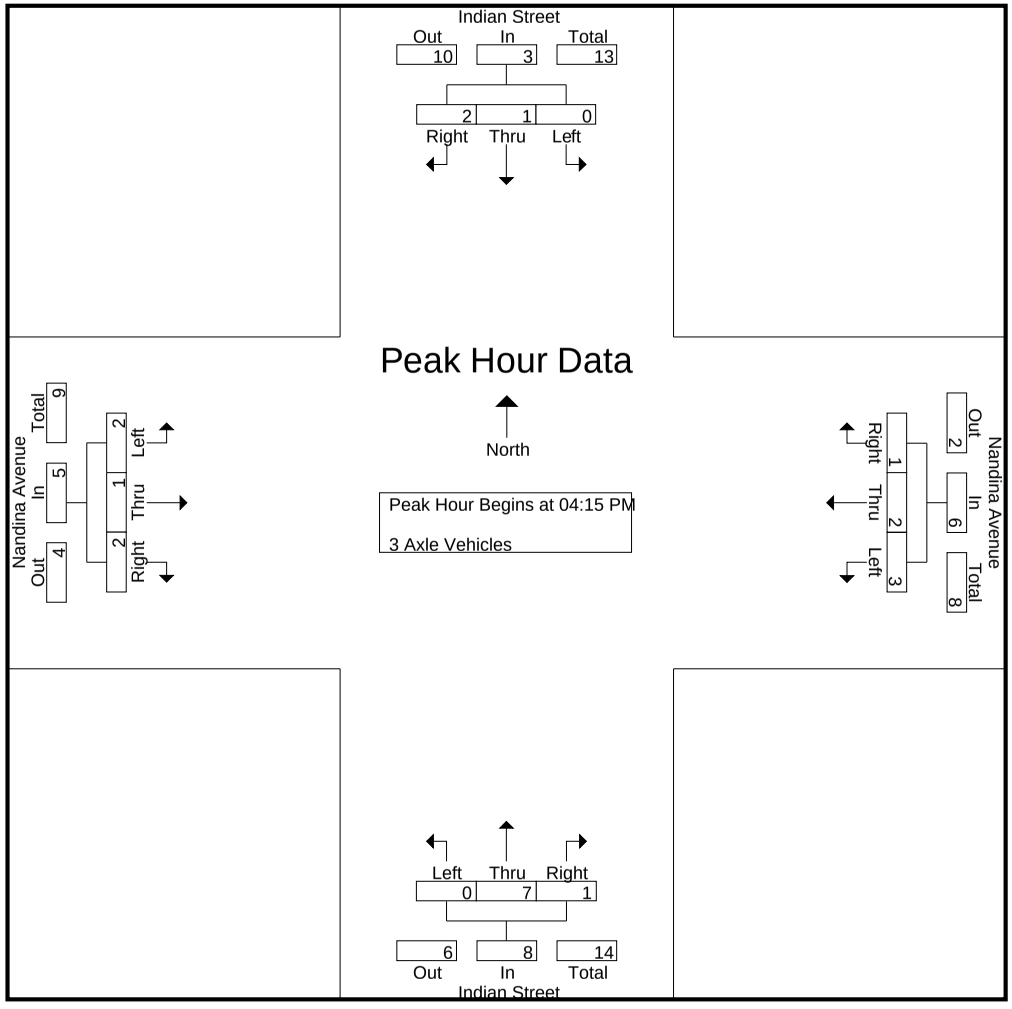

Counts Unlimited
PO Box 1178
Corona, CA 92878
(951) 268-6268

City of Moreno Valley
N/S: Indian Street
E/W: Nandina Avenue
Weather: Clear

File Name : MRVINNAPM
Site Code : 05115699
Start Date : 12/16/2015
Page No : 3

	Indian Street Southbound				Nandina Avenue Westbound				Indian Street Northbound				Nandina Avenue Eastbound				
Start Time	Left	Thru	Right	App. Total	Left	Thru	Right	App. Total	Left	Thru	Right	App. Total	Left	Thru	Right	App. Total	Int. Total
Peak Hour Analysis From 04:15 PM to 05:00 PM - Peak 1 of 1																	
Peak Hour for Each Approach Begins at:																	
	04:15 PM				04:15 PM				04:15 PM				04:15 PM				
+0 mins.	0	**1**	**1**	**2**	0	**1**	0	1	0	1	0	1	**1**	0	**1**	**2**	
+15 mins.	0	0	0	0	**2**	0	0	**2**	0	2	0	2	1	0	0	1	
+30 mins.	0	0	1	1	0	1	**1**	2	0	**3**	0	**3**	0	**1**	1	2	
+45 mins.	0	0	0	0	1	0	0	1	0	1	**1**	2	0	0	0	0	
Total Volume	0	1	2	3	3	2	1	6	0	7	1	8	2	1	2	5	
% App. Total	0	33.3	66.7		50	33.3	16.7		0	87.5	12.5		40	20	40		
PHF	.000	.250	.500	.375	.375	.500	.250	.750	.000	.583	.250	.667	.500	.250	.500	.625	

Counts Unlimited
PO Box 1178
Corona, CA 92878
(951) 268-6268

City of Moreno Valley
N/S: Indian Street
E/W: Nandina Avenue
Weather: Clear

File Name : MRVINNAPM
Site Code : 05115699
Start Date : 12/16/2015
Page No : 1

Groups Printed- 4+ Axle Trucks

	Indian Street Southbound					Nandina Avenue Westbound					Indian Street Northbound					Nandina Avenue Eastbound							
Start Time	Left	Thru	Right	RTOR	App. Total	Left	Thru	Right	RTOR	App. Total	Left	Thru	Right	RTOR	App. Total	Left	Thru	Right	RTOR	App. Total	Exclu. Total	Inclu. Total	Int. Total
04:00 PM	0	0	0	0	0	2	0	0	0	2	2	1	0	0	3	0	2	3	1	5	1	10	11
04:15 PM	0	0	1	1	1	4	0	1	1	5	0	0	1	0	1	0	0	4	3	4	5	11	16
04:30 PM	0	1	1	0	2	1	0	0	0	1	1	1	1	1	3	0	0	1	1	1	2	7	9
04:45 PM	0	1	0	0	1	6	0	0	0	6	3	3	0	0	6	0	1	3	1	4	1	17	18
Total	0	2	2	1	4	13	0	1	1	14	6	5	2	1	13	0	3	11	6	14	9	45	54
05:00 PM	0	0	1	1	1	6	0	0	0	6	0	0	1	1	1	0	0	0	0	0	2	8	10
05:15 PM	0	3	1	1	4	4	2	0	0	6	0	1	1	0	2	0	1	1	1	2	2	14	16
05:30 PM	0	1	0	0	1	2	0	0	0	2	0	0	0	0	0	0	1	1	1	2	1	5	6
05:45 PM	0	2	0	0	2	1	0	0	0	1	1	0	0	0	1	0	0	0	0	0	0	4	4
Total	0	6	2	2	8	13	2	0	0	15	1	1	2	1	4	0	2	2	2	4	5	31	36
Grand Total	0	8	4	3	12	26	2	1	1	29	7	6	4	2	17	0	5	13	8	18	14	76	90
Apprch %	0	66.7	33.3			89.7	6.9	3.4			41.2	35.3	23.5			0	27.8	72.2					
Total %	0	10.5	5.3		15.8	34.2	2.6	1.3		38.2	9.2	7.9	5.3		22.4	0	6.6	17.1		23.7	15.6	84.4	

	Indian Street Southbound				Nandina Avenue Westbound				Indian Street Northbound				Nandina Avenue Eastbound				
Start Time	Left	Thru	Right	App. Total	Left	Thru	Right	App. Total	Left	Thru	Right	App. Total	Left	Thru	Right	App. Total	Int. Total
Peak Hour Analysis From 04:15 PM to 05:00 PM - Peak 1 of 1																	
Peak Hour for Entire Intersection Begins at 04:15 PM																	
04:15 PM	0	0	**1**	1	4	0	**1**	5	0	0	**1**	1	0	0	**4**	**4**	11
04:30 PM	0	**1**	1	**2**	1	0	0	1	1	1	1	3	0	0	1	1	7
04:45 PM	0	1	0	1	**6**	0	0	**6**	**3**	**3**	0	**6**	0	**1**	3	4	**17**
05:00 PM	0	0	1	1	6	0	0	6	0	0	1	1	0	0	0	0	8
Total Volume	0	2	3	5	17	0	1	18	4	4	3	11	0	1	8	9	43
% App. Total	0	40	60		94.4	0	5.6		36.4	36.4	27.3		0	11.1	88.9		
PHF	.000	.500	.750	.625	.708	.000	.250	.750	.333	.333	.750	.458	.000	.250	.500	.563	.632

Counts Unlimited
PO Box 1178
Corona, CA 92878
(951) 268-6268

City of Moreno Valley
N/S: Indian Street
E/W: Nandina Avenue
Weather: Clear

File Name : MRVINNAPM
Site Code : 05115699
Start Date : 12/16/2015
Page No : 2

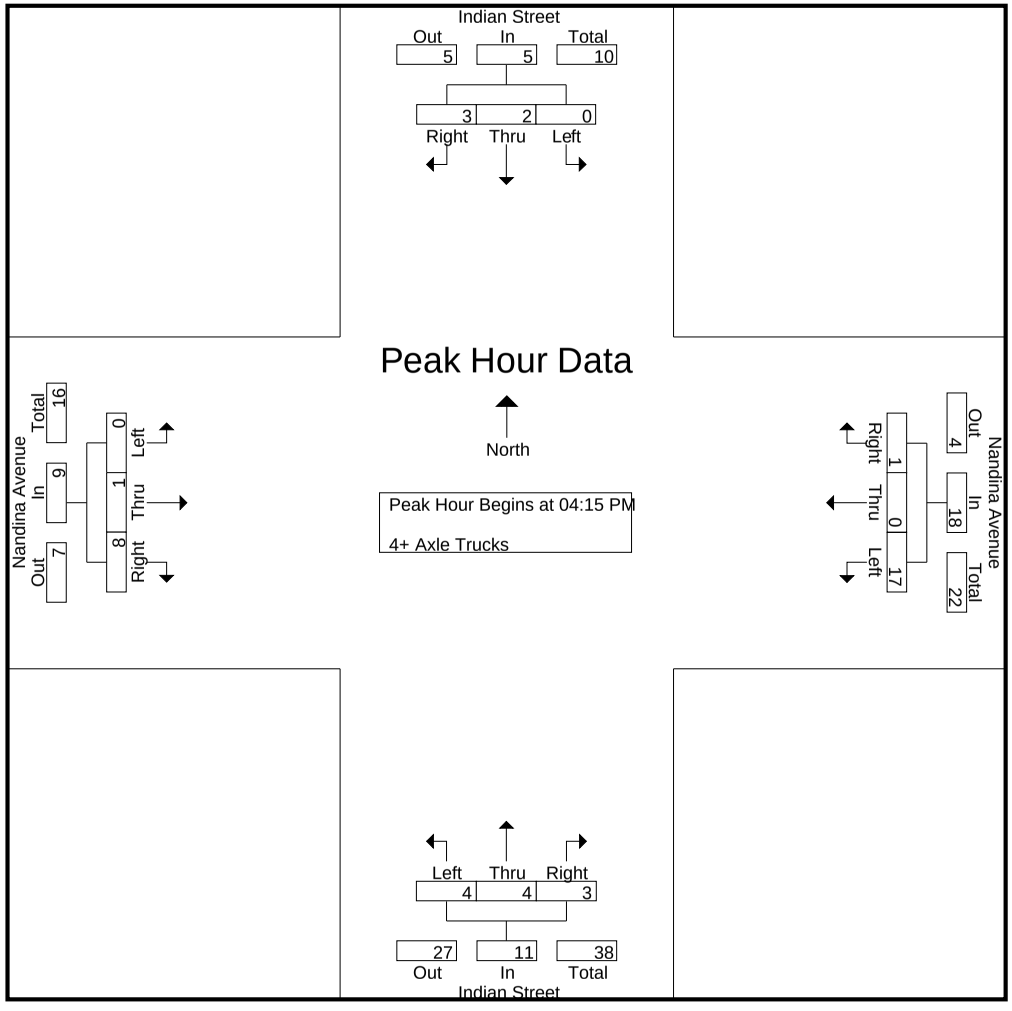

Counts Unlimited
PO Box 1178
Corona, CA 92878
(951) 268-6268

City of Moreno Valley
N/S: Indian Street
E/W: Nandina Avenue
Weather: Clear

File Name : MRVINNAPM
Site Code : 05115699
Start Date : 12/16/2015
Page No : 3

	Indian Street Southbound				Nandina Avenue Westbound				Indian Street Northbound				Nandina Avenue Eastbound				
Start Time	Left	Thru	Right	App. Total	Left	Thru	Right	App. Total	Left	Thru	Right	App. Total	Left	Thru	Right	App. Total	Int. Total
Peak Hour Analysis From 04:15 PM to 05:00 PM - Peak 1 of 1																	
Peak Hour for Each Approach Begins at:																	
	04:15 PM				04:15 PM				04:15 PM				04:15 PM				
+0 mins.	0	0	**1**	1	4	0	**1**	5	0	0	**1**	1	0	0	**4**	**4**	
+15 mins.	0	**1**	1	**2**	1	0	0	1	1	1	1	3	0	0	1	1	
+30 mins.	0	1	0	1	**6**	0	0	**6**	**3**	**3**	0	**6**	0	**1**	3	4	
+45 mins.	0	0	1	1	6	0	0	6	0	0	1	1	0	0	0	0	
Total Volume	0	2	3	5	17	0	1	18	4	4	3	11	0	1	8	9	
% App. Total	0	40	60		94.4	0	5.6		36.4	36.4	27.3		0	11.1	88.9		
PHF	.000	.500	.750	.625	.708	.000	.250	.750	.333	.333	.750	.458	.000	.250	.500	.563	

Location: Moreno Valley
N/S: Indian Street
E/W: Nandina Avenue

Site Code: 051-15699
Date: 12/16/2015
Weather: Clear

PEDESTRIANS

	North Leg Indian Street	East Leg Nandina Avenue	South Leg Indian Street	West Leg Nandina Avenue	TOTAL
7:00 AM	0	0	0	0	0
7:15 AM	0	0	0	0	0
7:30 AM	1 1	1 1	0	0	2
7:45 AM	0	0	0	0	0
8:00 AM	2	0	0	0	2
8:15 AM	2	0	0	0	2
8:30 AM	0	0	0	0	0
8:45 AM	0	3	0	0	3
TOTAL VOLUMES:	5	4	0	0	9

	North Leg Indian Street	East Leg Nandina Avenue	South Leg Indian Street	West Leg Nandina Avenue	TOTAL
4:00 PM	1	0	0	0	1
4:15 PM	1	0	0	0	1
4:30 PM	15 35	6 11	0	0	21
4:45 PM	15	3	1 1	1 1	20
5:00 PM	4	2	0	0	6
5:15 PM	0	0	0	0	0
5:30 PM	0	0	0	0	0
5:45 PM	3	1	0	0	4
TOTAL VOLUMES:	39	12	1	1	53

Counts Unlimited, Inc.
PO Box 1178
Corona, CA 92878
951-268-6268

Location: Moreno Valley
N/S: Indian Street
E/W: Nandina Avenue

Site Code: 051-15699
Date: 12/16/2015
Weather: Clear

BICYCLES

	North Leg Indian Street	East Leg Nandina Avenue	South Leg Indian Street	West Leg Nandina Avenue	TOTAL
7:00 AM	0	0	0	1	1
7:15 AM	0	0	0	0	0
7:30 AM	0	0	0	0	0
7:45 AM	0	0	0	0	0
8:00 AM	0	0	0	0	0
8:15 AM	0	0	0	0	0
8:30 AM	0	0	0	0	0
8:45 AM	0	0	0	0	0
TOTAL VOLUMES:	0	0	0	1	1

1

	North Leg Indian Street	East Leg Nandina Avenue	South Leg Indian Street	West Leg Nandina Avenue	TOTAL
4:00 PM	0	0	0	0	0
4:15 PM	0	0	0	0	0
4:30 PM	0	0	0	0	0
4:45 PM	0	0	0	0	0
5:00 PM	0	0	0	0	0
5:15 PM	0	0	0	0	0
5:30 PM	0	0	0	0	0
5:45 PM	0	0	0	0	0
TOTAL VOLUMES:	0	0	0	0	0

Counts Unlimited, Inc.
PO Box 1178
Corona, CA 92878
951-268-6268

Counts Unlimited
PO Box 1178
Corona, CA 92878
(951) 268-6268

City of Moreno Valley
N/S: Indian Street
E/W: Grove View Road
Weather: Clear

File Name : MRVINGRAM
Site Code : 05115699
Start Date : 12/16/2015
Page No : 1

Groups Printed- Passenger Vehicles - Large 2 Axle Vehicles - 3 Axle Vehicles - 4+ Axle Trucks

	Indian Street Southbound			Grove View Road Westbound			Indian Street Northbound			
Start Time	Left	Thru	App. Total	Left	Right	App. Total	Thru	Right	App. Total	Int. Total
07:00 AM	0	53	53	2	2	4	53	4	57	114
07:15 AM	0	34	34	3	0	3	70	5	75	112
07:30 AM	1	33	34	5	2	7	71	1	72	113
07:45 AM	0	45	45	1	0	1	89	8	97	143
Total	1	165	166	11	4	15	283	18	301	482
08:00 AM	0	33	33	2	1	3	57	6	63	99
08:15 AM	1	42	43	4	1	5	23	5	28	76
08:30 AM	0	24	24	7	2	9	52	2	54	87
08:45 AM	0	33	33	5	3	8	24	3	27	68
Total	1	132	133	18	7	25	156	16	172	330
Grand Total	2	297	299	29	11	40	439	34	473	812
Apprch %	0.7	99.3		72.5	27.5		92.8	7.2		
Total %	0.2	36.6	36.8	3.6	1.4	4.9	54.1	4.2	58.3	
Passenger Vehicles	2	218	220	17	9	26	367	19	386	632
% Passenger Vehicles	100	73.4	73.6	58.6	81.8	65	83.6	55.9	81.6	77.8
Large 2 Axle Vehicles	0	12	12	6	0	6	15	0	15	33
% Large 2 Axle Vehicles	0	4	4	20.7	0	15	3.4	0	3.2	4.1
3 Axle Vehicles	0	19	19	3	2	5	15	0	15	39
% 3 Axle Vehicles	0	6.4	6.4	10.3	18.2	12.5	3.4	0	3.2	4.8
4+ Axle Trucks	0	48	48	3	0	3	42	15	57	108
% 4+ Axle Trucks	0	16.2	16.1	10.3	0	7.5	9.6	44.1	12.1	13.3

	Indian Street Southbound			Grove View Road Westbound			Indian Street Northbound			
Start Time	Left	Thru	App. Total	Left	Right	App. Total	Thru	Right	App. Total	Int. Total
Peak Hour Analysis From 07:00 AM to 08:45 AM - Peak 1 of 1										
Peak Hour for Entire Intersection Begins at 07:00 AM										
07:00 AM	0	**53**	**53**	2	**2**	4	53	4	57	114
07:15 AM	0	34	34	3	0	3	70	5	75	112
07:30 AM	**1**	33	34	**5**	2	**7**	71	1	72	113
07:45 AM	0	45	45	1	0	1	**89**	**8**	**97**	**143**
Total Volume	1	165	166	11	4	15	283	18	301	482
% App. Total	0.6	99.4		73.3	26.7		94	6		
PHF	.250	.778	.783	.550	.500	.536	.795	.563	.776	.843

Counts Unlimited
PO Box 1178
Corona, CA 92878
(951) 268-6268

City of Moreno Valley
N/S: Indian Street
E/W: Grove View Road
Weather: Clear

File Name : MRVINGRAM
Site Code : 05115699
Start Date : 12/16/2015
Page No : 2

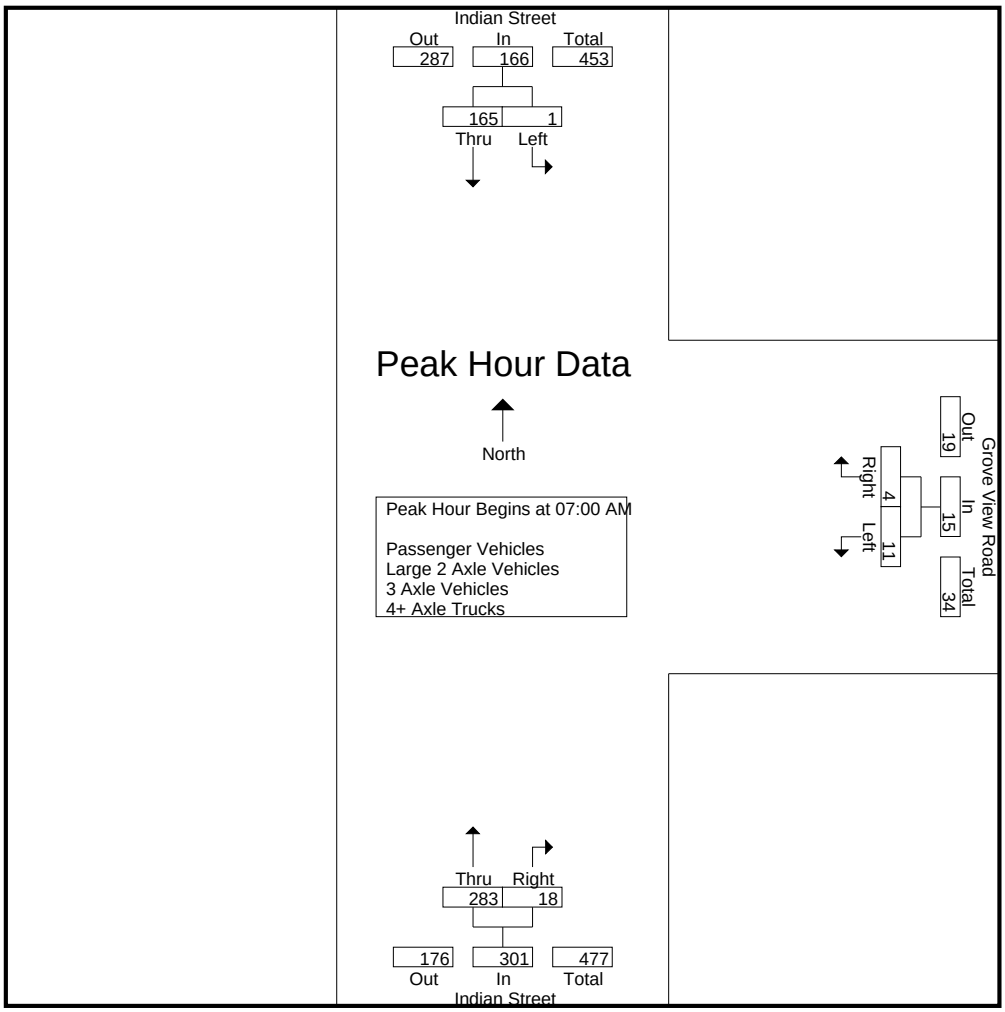

Peak Hour Analysis From 07:00 AM to 08:45 AM - Peak 1 of 1
Peak Hour for Each Approach Begins at:

	07:00 AM			08:00 AM			07:15 AM		
+0 mins.	0	**53**	**53**	2	1	3	70	5	75
+15 mins.	0	34	34	4	1	5	71	1	72
+30 mins.	**1**	33	34	**7**	2	**9**	**89**	**8**	**97**
+45 mins.	0	45	45	5	**3**	8	57	6	63
Total Volume	1	165	166	18	7	25	287	20	307
% App. Total	0.6	99.4		72	28		93.5	6.5	
PHF	.250	.778	.783	.643	.583	.694	.806	.625	.791

Counts Unlimited
PO Box 1178
Corona, CA 92878
(951) 268-6268

City of Moreno Valley
N/S: Indian Street
E/W: Grove View Road
Weather: Clear

File Name : MRVINGRAM
Site Code : 05115699
Start Date : 12/16/2015
Page No : 1

Groups Printed- Passenger Vehicles

	Indian Street Southbound			Grove View Road Westbound			Indian Street Northbound			
Start Time	Left	Thru	App. Total	Left	Right	App. Total	Thru	Right	App. Total	Int. Total
07:00 AM	0	45	45	2	2	4	45	1	46	95
07:15 AM	0	25	25	2	0	2	62	3	65	92
07:30 AM	1	24	25	4	1	5	62	1	63	93
07:45 AM	0	31	31	0	0	0	83	7	90	121
Total	1	125	126	8	3	11	252	12	264	401
08:00 AM	0	20	20	0	1	1	45	3	48	69
08:15 AM	1	31	32	0	1	1	18	1	19	52
08:30 AM	0	19	19	4	2	6	34	2	36	61
08:45 AM	0	23	23	5	2	7	18	1	19	49
Total	1	93	94	9	6	15	115	7	122	231
Grand Total	2	218	220	17	9	26	367	19	386	632
Apprch %	0.9	99.1		65.4	34.6		95.1	4.9		
Total %	0.3	34.5	34.8	2.7	1.4	4.1	58.1	3	61.1	

	Indian Street Southbound			Grove View Road Westbound			Indian Street Northbound			
Start Time	Left	Thru	App. Total	Left	Right	App. Total	Thru	Right	App. Total	Int. Total
Peak Hour Analysis From 07:00 AM to 07:45 AM - Peak 1 of 1										
Peak Hour for Entire Intersection Begins at 07:00 AM										
07:00 AM	0	**45**	**45**	2	**2**	4	45	1	46	95
07:15 AM	0	25	25	2	0	2	62	3	65	92
07:30 AM	**1**	24	25	**4**	1	**5**	62	1	63	93
07:45 AM	0	31	31	0	0	0	**83**	**7**	**90**	**121**
Total Volume	1	125	126	8	3	11	252	12	264	401
% App. Total	0.8	99.2		72.7	27.3		95.5	4.5		
PHF	.250	.694	.700	.500	.375	.550	.759	.429	.733	.829

Counts Unlimited
PO Box 1178
Corona, CA 92878
(951) 268-6268

City of Moreno Valley
N/S: Indian Street
E/W: Grove View Road
Weather: Clear

File Name : MRVINGRAM
Site Code : 05115699
Start Date : 12/16/2015
Page No : 2

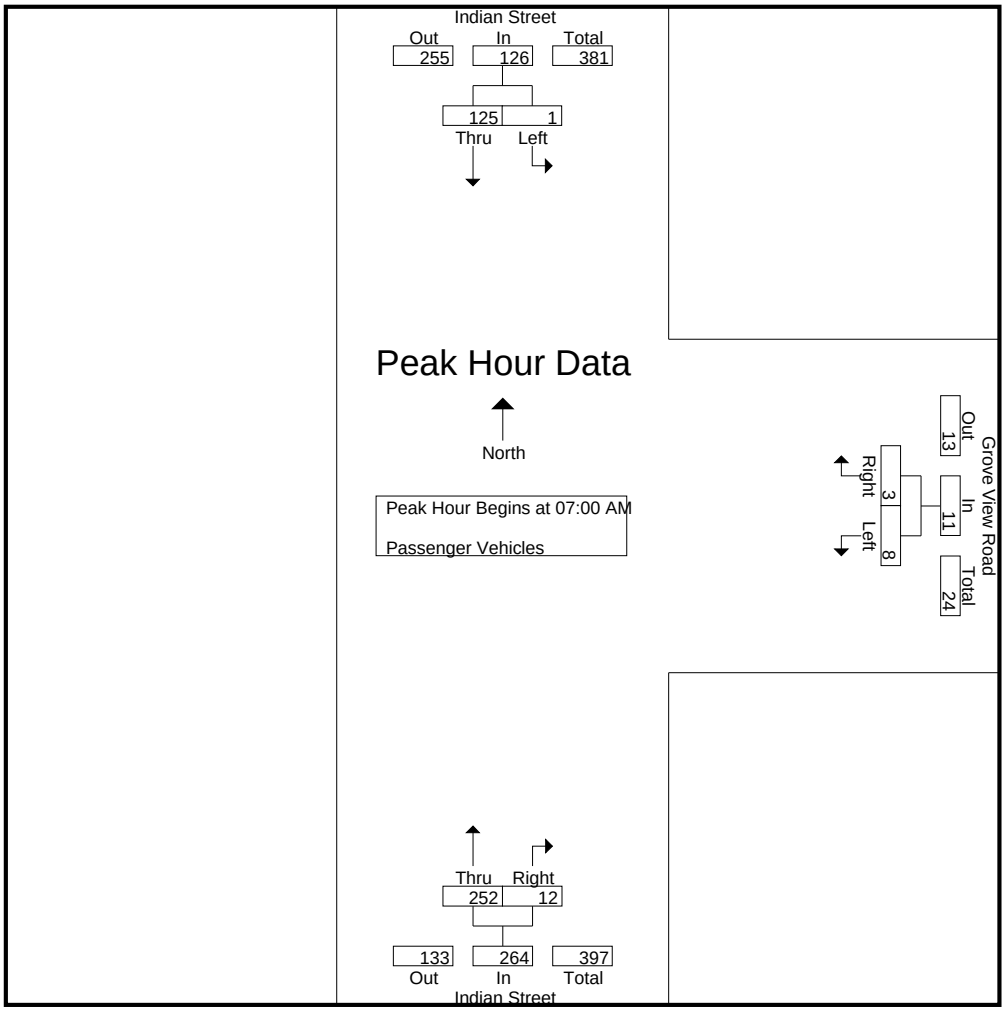

Peak Hour Analysis From 07:00 AM to 07:45 AM - Peak 1 of 1
Peak Hour for Each Approach Begins at:

	07:00 AM			07:00 AM			07:00 AM		
+0 mins.	0	**45**	**45**	2	**2**	4	45	1	46
+15 mins.	0	25	25	2	0	2	62	3	65
+30 mins.	**1**	24	25	**4**	1	**5**	62	1	63
+45 mins.	0	31	31	0	0	0	**83**	**7**	**90**
Total Volume	1	125	126	8	3	11	252	12	264
% App. Total	0.8	99.2		72.7	27.3		95.5	4.5	
PHF	.250	.694	.700	.500	.375	.550	.759	.429	.733

Counts Unlimited
PO Box 1178
Corona, CA 92878
(951) 268-6268

City of Moreno Valley
N/S: Indian Street
E/W: Grove View Road
Weather: Clear

File Name : MRVINGRAM
Site Code : 05115699
Start Date : 12/16/2015
Page No : 1

Groups Printed- Large 2 Axle Vehicles

	Indian Street Southbound			Grove View Road Westbound			Indian Street Northbound			
Start Time	Left	Thru	App. Total	Left	Right	App. Total	Thru	Right	App. Total	Int. Total
07:00 AM	0	0	0	0	0	0	0	0	0	0
07:15 AM	0	1	1	0	0	0	4	0	4	5
07:30 AM	0	2	2	1	0	1	2	0	2	5
07:45 AM	0	3	3	0	0	0	0	0	0	3
Total	0	6	6	1	0	1	6	0	6	13
08:00 AM	0	4	4	0	0	0	0	0	0	4
08:15 AM	0	1	1	3	0	3	1	0	1	5
08:30 AM	0	0	0	2	0	2	6	0	6	8
08:45 AM	0	1	1	0	0	0	2	0	2	3
Total	0	6	6	5	0	5	9	0	9	20
Grand Total	0	12	12	6	0	6	15	0	15	33
Apprch %	0	100		100	0		100	0		
Total %	0	36.4	36.4	18.2	0	18.2	45.5	0	45.5	

	Indian Street Southbound			Grove View Road Westbound			Indian Street Northbound			
Start Time	Left	Thru	App. Total	Left	Right	App. Total	Thru	Right	App. Total	Int. Total
Peak Hour Analysis From 07:00 AM to 07:45 AM - Peak 1 of 1										
Peak Hour for Entire Intersection Begins at 07:00 AM										
07:00 AM	0	0	0	0	0	0	0	0	0	0
07:15 AM	0	1	1	0	0	0	**4**	0	**4**	**5**
07:30 AM	0	2	2	**1**	0	**1**	2	0	2	5
07:45 AM	0	**3**	**3**	0	0	0	0	0	0	3
Total Volume	0	6	6	1	0	1	6	0	6	13
% App. Total	0	100		100	0		100	0		
PHF	.000	.500	.500	.250	.000	.250	.375	.000	.375	.650

Counts Unlimited
PO Box 1178
Corona, CA 92878
(951) 268-6268

City of Moreno Valley
N/S: Indian Street
E/W: Grove View Road
Weather: Clear

File Name : MRVINGRAM
Site Code : 05115699
Start Date : 12/16/2015
Page No : 2

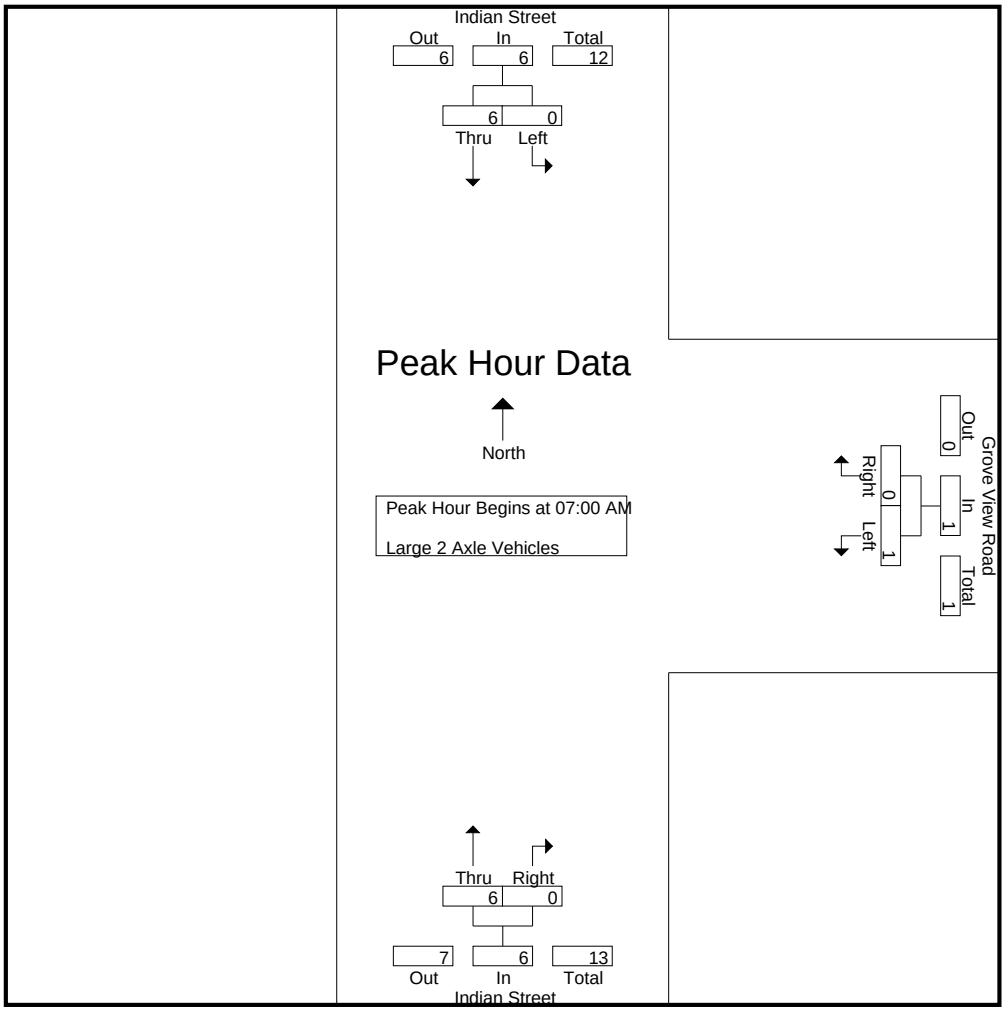

Peak Hour Analysis From 07:00 AM to 07:45 AM - Peak 1 of 1
Peak Hour for Each Approach Begins at:

	07:00 AM			07:00 AM			07:00 AM		
+0 mins.	0	0	0	0	0	0	0	0	0
+15 mins.	0	1	1	0	0	0	**4**	0	**4**
+30 mins.	0	2	2	**1**	0	**1**	2	0	2
+45 mins.	0	**3**	**3**	0	0	0	0	0	0
Total Volume	0	6	6	1	0	1	6	0	6
% App. Total	0	100		100	0		100	0	
PHF	.000	.500	.500	.250	.000	.250	.375	.000	.375

Counts Unlimited
PO Box 1178
Corona, CA 92878
(951) 268-6268

City of Moreno Valley
N/S: Indian Street
E/W: Grove View Road
Weather: Clear

File Name : MRVINGRAM
Site Code : 05115699
Start Date : 12/16/2015
Page No : 1

Groups Printed- 3 Axle Vehicles

	Indian Street Southbound			Grove View Road Westbound			Indian Street Northbound			
Start Time	Left	Thru	App. Total	Left	Right	App. Total	Thru	Right	App. Total	Int. Total
07:00 AM	0	0	0	0	0	0	2	0	2	2
07:15 AM	0	1	1	0	0	0	1	0	1	2
07:30 AM	0	2	2	0	1	1	3	0	3	6
07:45 AM	0	5	5	1	0	1	2	0	2	8
Total	0	8	8	1	1	2	8	0	8	18
08:00 AM	0	2	2	0	0	0	1	0	1	3
08:15 AM	0	5	5	1	0	1	2	0	2	8
08:30 AM	0	3	3	1	0	1	3	0	3	7
08:45 AM	0	1	1	0	1	1	1	0	1	3
Total	0	11	11	2	1	3	7	0	7	21
Grand Total	0	19	19	3	2	5	15	0	15	39
Apprch %	0	100		60	40		100	0		
Total %	0	48.7	48.7	7.7	5.1	12.8	38.5	0	38.5	

	Indian Street Southbound			Grove View Road Westbound			Indian Street Northbound			
Start Time	Left	Thru	App. Total	Left	Right	App. Total	Thru	Right	App. Total	Int. Total
Peak Hour Analysis From 07:00 AM to 07:45 AM - Peak 1 of 1										
Peak Hour for Entire Intersection Begins at 07:00 AM										
07:00 AM	0	0	0	0	0	0	2	0	2	2
07:15 AM	0	1	1	0	0	0	1	0	1	2
07:30 AM	0	2	2	0	**1**	**1**	**3**	0	**3**	6
07:45 AM	0	**5**	**5**	**1**	0	1	2	0	2	**8**
Total Volume	0	8	8	1	1	2	8	0	8	18
% App. Total	0	100		50	50		100	0		
PHF	.000	.400	.400	.250	.250	.500	.667	.000	.667	.563

Counts Unlimited
PO Box 1178
Corona, CA 92878
(951) 268-6268

City of Moreno Valley
N/S: Indian Street
E/W: Grove View Road
Weather: Clear

File Name : MRVINGRAM
Site Code : 05115699
Start Date : 12/16/2015
Page No : 2

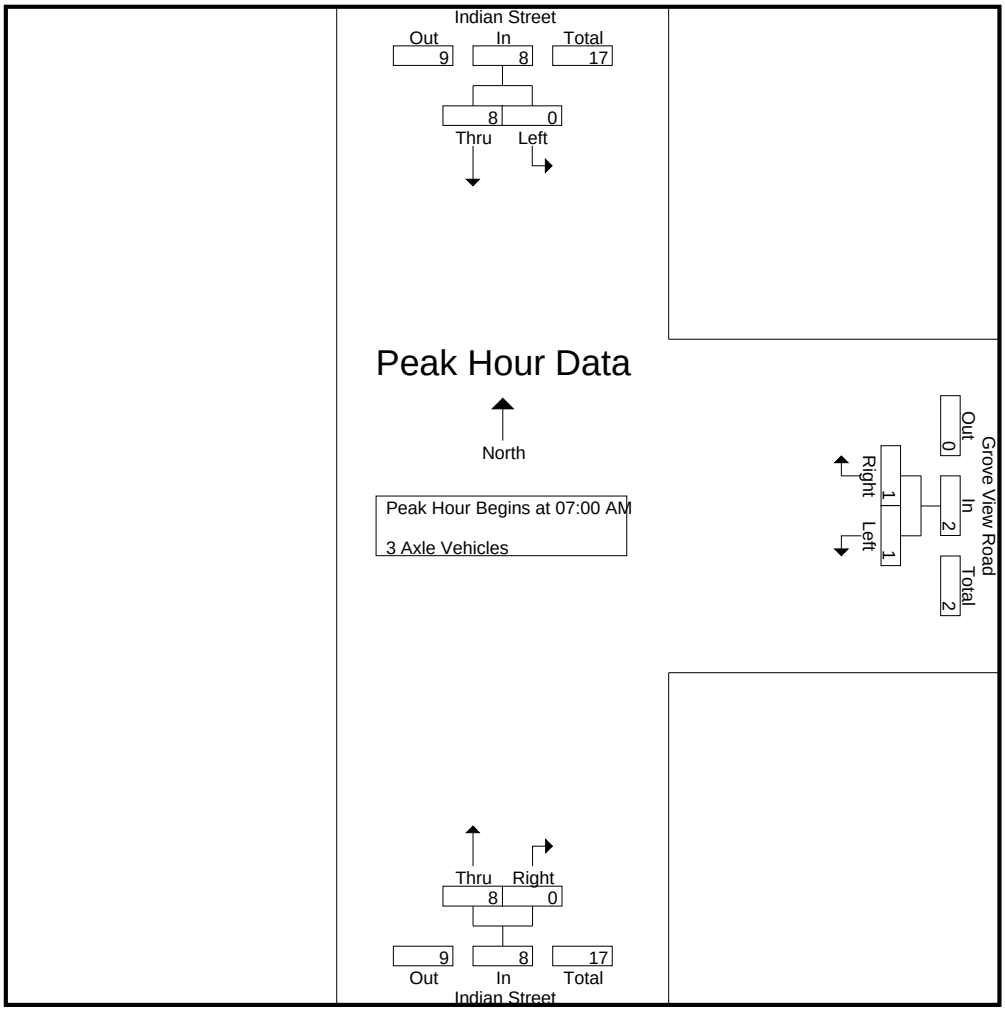

Peak Hour Analysis From 07:00 AM to 07:45 AM - Peak 1 of 1
Peak Hour for Each Approach Begins at:

	07:00 AM			07:00 AM			07:00 AM		
+0 mins.	0	0	0	0	0	0	2	0	2
+15 mins.	0	1	1	0	0	0	1	0	1
+30 mins.	0	2	2	0	**1**	**1**	**3**	0	**3**
+45 mins.	0	**5**	**5**	**1**	0	1	2	0	2
Total Volume	0	8	8	1	1	2	8	0	8
% App. Total	0	100		50	50		100	0	
PHF	.000	.400	.400	.250	.250	.500	.667	.000	.667

Counts Unlimited
PO Box 1178
Corona, CA 92878
(951) 268-6268

City of Moreno Valley
N/S: Indian Street
E/W: Grove View Road
Weather: Clear

File Name : MRVINGRAM
Site Code : 05115699
Start Date : 12/16/2015
Page No : 1

Groups Printed- 4+ Axle Trucks

	Indian Street Southbound			Grove View Road Westbound			Indian Street Northbound			
Start Time	Left	Thru	App. Total	Left	Right	App. Total	Thru	Right	App. Total	Int. Total
07:00 AM	0	8	8	0	0	0	6	3	9	17
07:15 AM	0	7	7	1	0	1	3	2	5	13
07:30 AM	0	5	5	0	0	0	4	0	4	9
07:45 AM	0	6	6	0	0	0	4	1	5	11
Total	0	26	26	1	0	1	17	6	23	50
08:00 AM	0	7	7	2	0	2	11	3	14	23
08:15 AM	0	5	5	0	0	0	2	4	6	11
08:30 AM	0	2	2	0	0	0	9	0	9	11
08:45 AM	0	8	8	0	0	0	3	2	5	13
Total	0	22	22	2	0	2	25	9	34	58
Grand Total	0	48	48	3	0	3	42	15	57	108
Apprch %	0	100		100	0		73.7	26.3		
Total %	0	44.4	44.4	2.8	0	2.8	38.9	13.9	52.8	

	Indian Street Southbound			Grove View Road Westbound			Indian Street Northbound			
Start Time	Left	Thru	App. Total	Left	Right	App. Total	Thru	Right	App. Total	Int. Total
Peak Hour Analysis From 07:00 AM to 07:45 AM - Peak 1 of 1										
Peak Hour for Entire Intersection Begins at 07:00 AM										
07:00 AM	0	**8**	**8**	0	0	0	**6**	**3**	**9**	**17**
07:15 AM	0	7	7	**1**	0	**1**	3	2	5	13
07:30 AM	0	5	5	0	0	0	4	0	4	9
07:45 AM	0	6	6	0	0	0	4	1	5	11
Total Volume	0	26	26	1	0	1	17	6	23	50
% App. Total	0	100		100	0		73.9	26.1		
PHF	.000	.813	.813	.250	.000	.250	.708	.500	.639	.735

Counts Unlimited
PO Box 1178
Corona, CA 92878
(951) 268-6268

City of Moreno Valley
N/S: Indian Street
E/W: Grove View Road
Weather: Clear

File Name : MRVINGRAM
Site Code : 05115699
Start Date : 12/16/2015
Page No : 2

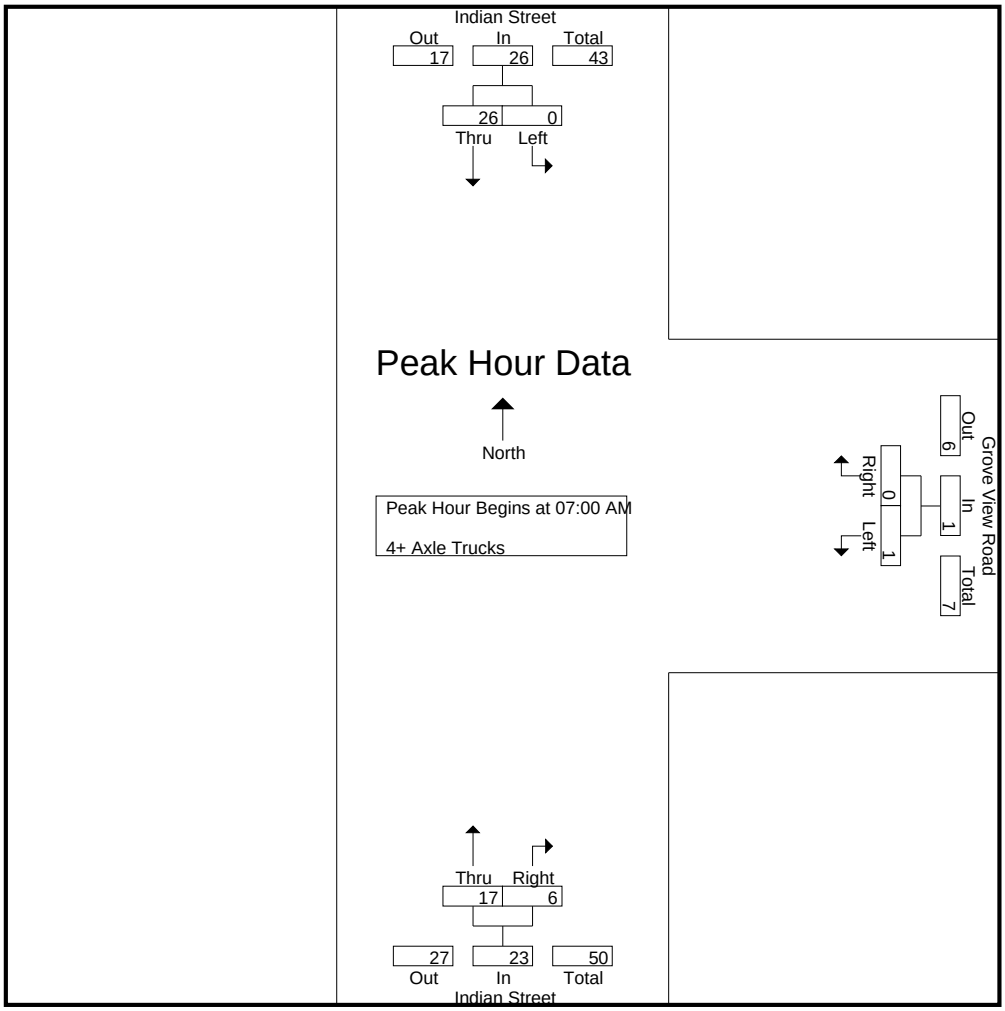

Peak Hour Analysis From 07:00 AM to 07:45 AM - Peak 1 of 1
Peak Hour for Each Approach Begins at:

	07:00 AM			07:00 AM			07:00 AM		
+0 mins.	0	**8**	**8**	0	0	0	**6**	**3**	**9**
+15 mins.	0	7	7	**1**	0	**1**	3	2	5
+30 mins.	0	5	5	0	0	0	4	0	4
+45 mins.	0	6	6	0	0	0	4	1	5
Total Volume	0	26	26	1	0	1	17	6	23
% App. Total	0	100		100	0		73.9	26.1	
PHF	.000	.813	.813	.250	.000	.250	.708	.500	.639

Counts Unlimited
PO Box 1178
Corona, CA 92878
(951) 268-6268

City of Moreno Valley
N/S: Indian Street
E/W: Grove View Road
Weather: Clear

File Name : MRVINGRPM
Site Code : 05115699
Start Date : 12/16/2015
Page No : 1

Groups Printed- Passenger Vehicles - Large 2 Axle Vehicles - 3 Axle Vehicles - 4+ Axle Trucks

	Indian Street Southbound			Grove View Road Westbound			Indian Street Northbound			
Start Time	Left	Thru	App. Total	Left	Right	App. Total	Thru	Right	App. Total	Int. Total
04:00 PM	0	63	63	14	1	15	73	2	75	153
04:15 PM	4	52	56	4	2	6	98	3	101	163
04:30 PM	3	155	158	7	4	11	116	5	121	290
04:45 PM	3	178	181	13	2	15	102	4	106	302
Total	10	448	458	38	9	47	389	14	403	908
05:00 PM	0	84	84	1	2	3	77	8	85	172
05:15 PM	1	83	84	3	3	6	62	4	66	156
05:30 PM	3	151	154	2	2	4	115	1	116	274
05:45 PM	1	123	124	3	1	4	135	0	135	263
Total	5	441	446	9	8	17	389	13	402	865
Grand Total	15	889	904	47	17	64	778	27	805	1773
Apprch %	1.7	98.3		73.4	26.6		96.6	3.4		
Total %	0.8	50.1	51	2.7	1	3.6	43.9	1.5	45.4	
Passenger Vehicles	12	844	856	41	14	55	718	13	731	1642
% Passenger Vehicles	80	94.9	94.7	87.2	82.4	85.9	92.3	48.1	90.8	92.6
Large 2 Axle Vehicles	1	5	6	0	2	2	6	1	7	15
% Large 2 Axle Vehicles	6.7	0.6	0.7	0	11.8	3.1	0.8	3.7	0.9	0.8
3 Axle Vehicles	0	3	3	0	0	0	36	3	39	42
% 3 Axle Vehicles	0	0.3	0.3	0	0	0	4.6	11.1	4.8	2.4
4+ Axle Trucks	2	37	39	6	1	7	18	10	28	74
% 4+ Axle Trucks	13.3	4.2	4.3	12.8	5.9	10.9	2.3	37	3.5	4.2

	Indian Street Southbound			Grove View Road Westbound			Indian Street Northbound			
Start Time	Left	Thru	App. Total	Left	Right	App. Total	Thru	Right	App. Total	Int. Total
Peak Hour Analysis From 04:00 PM to 05:45 PM - Peak 1 of 1										
Peak Hour for Entire Intersection Begins at 04:15 PM										
04:15 PM	**4**	52	56	4	2	6	98	3	101	163
04:30 PM	3	155	158	7	**4**	11	**116**	5	**121**	290
04:45 PM	3	**178**	**181**	**13**	2	**15**	102	4	106	**302**
05:00 PM	0	84	84	1	2	3	77	**8**	85	172
Total Volume	10	469	479	25	10	35	393	20	413	927
% App. Total	2.1	97.9		71.4	28.6		95.2	4.8		
PHF	.625	.659	.662	.481	.625	.583	.847	.625	.853	.767

Counts Unlimited
PO Box 1178
Corona, CA 92878
(951) 268-6268

City of Moreno Valley
N/S: Indian Street
E/W: Grove View Road
Weather: Clear

File Name : MRVINGRPM
Site Code : 05115699
Start Date : 12/16/2015
Page No : 2

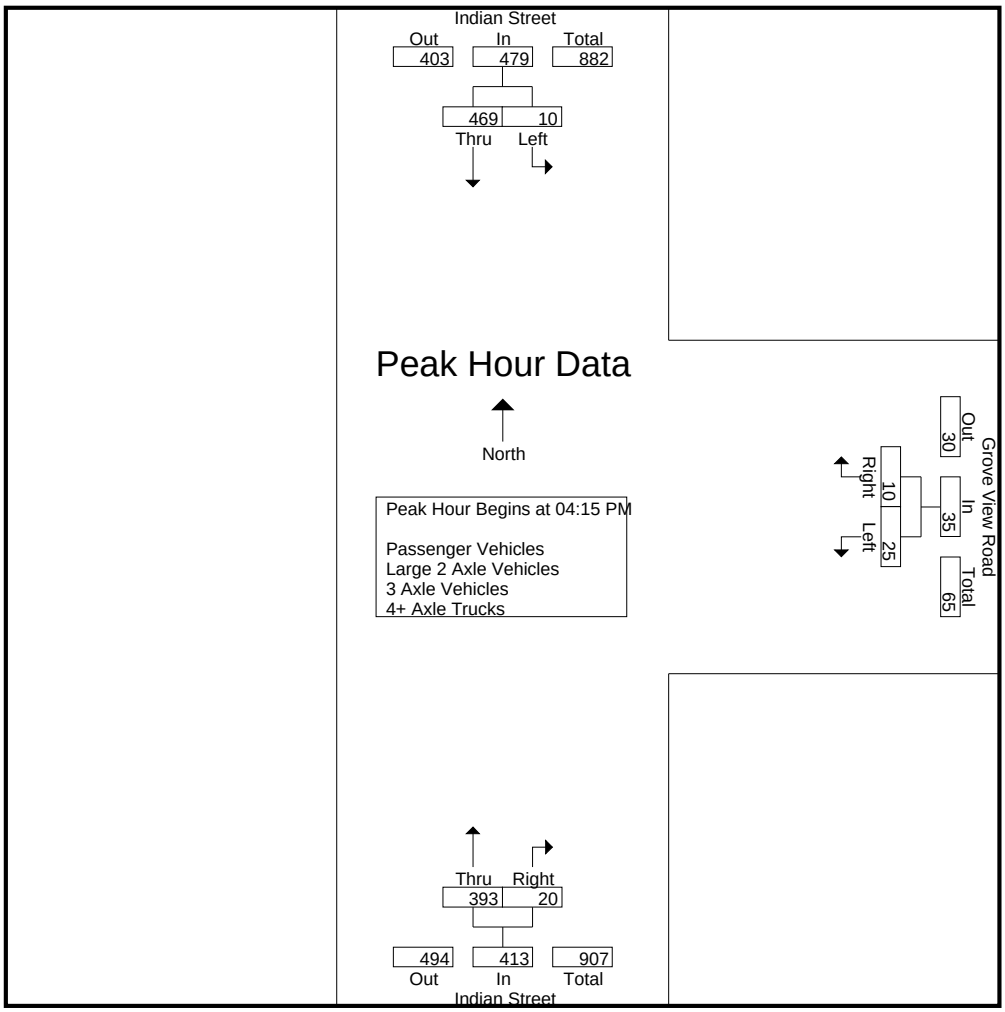

Peak Hour Analysis From 04:00 PM to 05:45 PM - Peak 1 of 1
Peak Hour for Each Approach Begins at:

	04:30 PM			04:00 PM			04:15 PM		
+0 mins.	**3**	155	158	**14**	1	**15**	98	3	101
+15 mins.	3	**178**	**181**	4	2	6	**116**	5	**121**
+30 mins.	0	84	84	7	**4**	11	102	4	106
+45 mins.	1	83	84	13	2	15	77	**8**	85
Total Volume	7	500	507	38	9	47	393	20	413
% App. Total	1.4	98.6		80.9	19.1		95.2	4.8	
PHF	.583	.702	.700	.679	.563	.783	.847	.625	.853

Counts Unlimited
PO Box 1178
Corona, CA 92878
(951) 268-6268

City of Moreno Valley
N/S: Indian Street
E/W: Grove View Road
Weather: Clear

File Name : MRVINGRPM
Site Code : 05115699
Start Date : 12/16/2015
Page No : 1

Groups Printed- Passenger Vehicles

	Indian Street Southbound			Grove View Road Westbound			Indian Street Northbound			
Start Time	Left	Thru	App. Total	Left	Right	App. Total	Thru	Right	App. Total	Int. Total
04:00 PM	0	56	56	14	0	14	62	1	63	133
04:15 PM	1	43	44	2	1	3	96	1	97	144
04:30 PM	3	154	157	6	4	10	107	1	108	275
04:45 PM	3	171	174	12	1	13	90	4	94	281
Total	7	424	431	34	6	40	355	7	362	833
05:00 PM	0	81	81	1	2	3	71	5	76	160
05:15 PM	1	76	77	2	3	5	56	1	57	139
05:30 PM	3	146	149	1	2	3	110	0	110	262
05:45 PM	1	117	118	3	1	4	126	0	126	248
Total	5	420	425	7	8	15	363	6	369	809
Grand Total	12	844	856	41	14	55	718	13	731	1642
Apprch %	1.4	98.6		74.5	25.5		98.2	1.8		
Total %	0.7	51.4	52.1	2.5	0.9	3.3	43.7	0.8	44.5	

	Indian Street Southbound			Grove View Road Westbound			Indian Street Northbound			
Start Time	Left	Thru	App. Total	Left	Right	App. Total	Thru	Right	App. Total	Int. Total
Peak Hour Analysis From 04:15 PM to 05:00 PM - Peak 1 of 1										
Peak Hour for Entire Intersection Begins at 04:15 PM										
04:15 PM	1	43	44	2	1	3	96	1	97	144
04:30 PM	**3**	154	157	6	**4**	10	**107**	1	**108**	275
04:45 PM	3	**171**	**174**	**12**	1	**13**	90	4	94	**281**
05:00 PM	0	81	81	1	2	3	71	**5**	76	160
Total Volume	7	449	456	21	8	29	364	11	375	860
% App. Total	1.5	98.5		72.4	27.6		97.1	2.9		
PHF	.583	.656	.655	.438	.500	.558	.850	.550	.868	.765

Counts Unlimited
PO Box 1178
Corona, CA 92878
(951) 268-6268

City of Moreno Valley
N/S: Indian Street
E/W: Grove View Road
Weather: Clear

File Name : MRVINGRPM
Site Code : 05115699
Start Date : 12/16/2015
Page No : 2

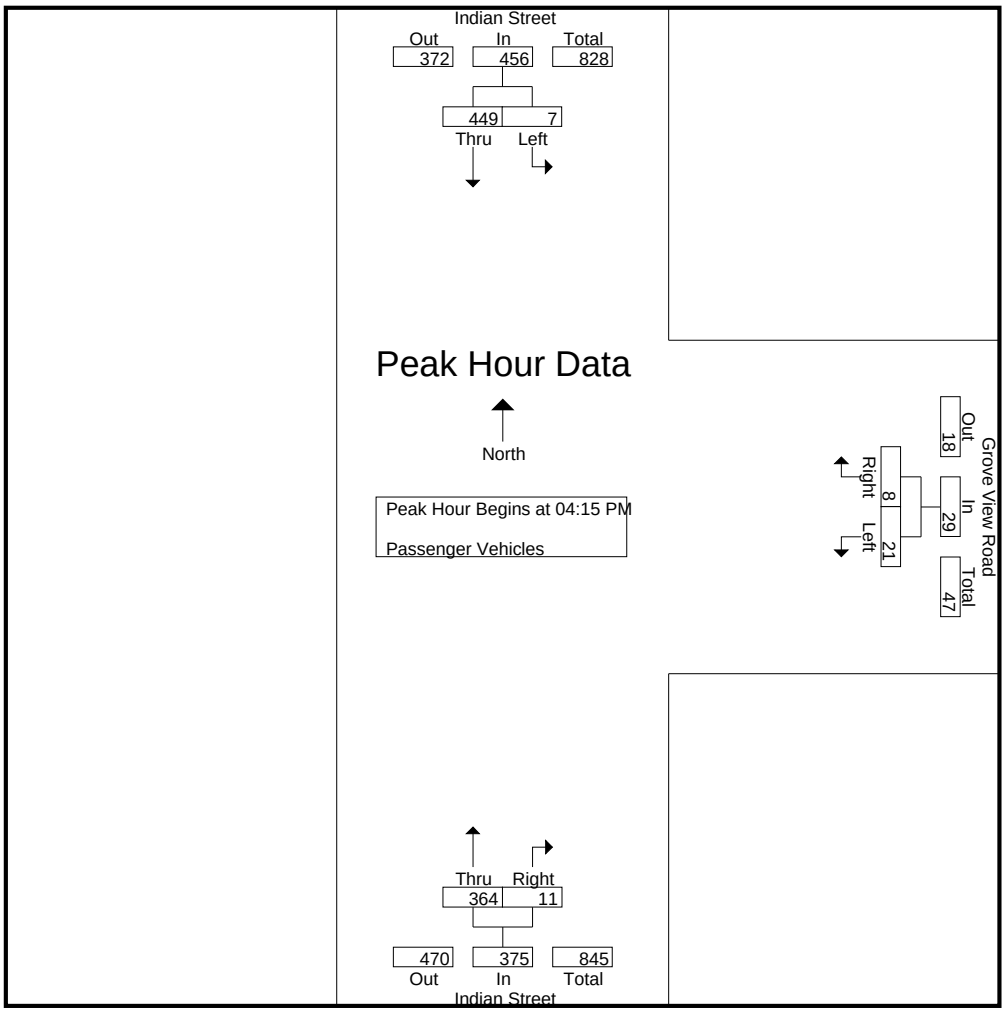

Peak Hour Analysis From 04:15 PM to 05:00 PM - Peak 1 of 1
Peak Hour for Each Approach Begins at:

	04:15 PM			04:15 PM			04:15 PM		
+0 mins.	1	43	44	2	1	3	96	1	97
+15 mins.	**3**	154	157	6	**4**	10	**107**	1	**108**
+30 mins.	3	**171**	**174**	**12**	1	**13**	90	4	94
+45 mins.	0	81	81	1	2	3	71	**5**	76
Total Volume	7	449	456	21	8	29	364	11	375
% App. Total	1.5	98.5		72.4	27.6		97.1	2.9	
PHF	.583	.656	.655	.438	.500	.558	.850	.550	.868

Counts Unlimited
PO Box 1178
Corona, CA 92878
(951) 268-6268

City of Moreno Valley
N/S: Indian Street
E/W: Grove View Road
Weather: Clear

File Name : MRVINGRPM
Site Code : 05115699
Start Date : 12/16/2015
Page No : 1

Groups Printed- Large 2 Axle Vehicles

	Indian Street Southbound			Grove View Road Westbound			Indian Street Northbound			
Start Time	Left	Thru	App. Total	Left	Right	App. Total	Thru	Right	App. Total	Int. Total
04:00 PM	0	0	0	0	1	1	4	0	4	5
04:15 PM	1	2	3	0	1	1	0	0	0	4
04:30 PM	0	0	0	0	0	0	0	0	0	0
04:45 PM	0	2	2	0	0	0	2	0	2	4
Total	1	4	5	0	2	2	6	0	6	13
05:00 PM	0	0	0	0	0	0	0	0	0	0
05:15 PM	0	0	0	0	0	0	0	1	1	1
05:30 PM	0	1	1	0	0	0	0	0	0	1
05:45 PM	0	0	0	0	0	0	0	0	0	0
Total	0	1	1	0	0	0	0	1	1	2
Grand Total	1	5	6	0	2	2	6	1	7	15
Apprch %	16.7	83.3		0	100		85.7	14.3		
Total %	6.7	33.3	40	0	13.3	13.3	40	6.7	46.7	

	Indian Street Southbound			Grove View Road Westbound			Indian Street Northbound			
Start Time	Left	Thru	App. Total	Left	Right	App. Total	Thru	Right	App. Total	Int. Total
Peak Hour Analysis From 04:15 PM to 05:00 PM - Peak 1 of 1										
Peak Hour for Entire Intersection Begins at 04:15 PM										
04:15 PM	**1**	**2**	**3**	0	**1**	**1**	0	0	0	**4**
04:30 PM	0	0	0	0	0	0	0	0	0	0
04:45 PM	0	2	2	0	0	0	**2**	0	**2**	4
05:00 PM	0	0	0	0	0	0	0	0	0	0
Total Volume	1	4	5	0	1	1	2	0	2	8
% App. Total	20	80		0	100		100	0		
PHF	.250	.500	.417	.000	.250	.250	.250	.000	.250	.500

Counts Unlimited
PO Box 1178
Corona, CA 92878
(951) 268-6268

City of Moreno Valley
N/S: Indian Street
E/W: Grove View Road
Weather: Clear

File Name : MRVINGRPM
Site Code : 05115699
Start Date : 12/16/2015
Page No : 2

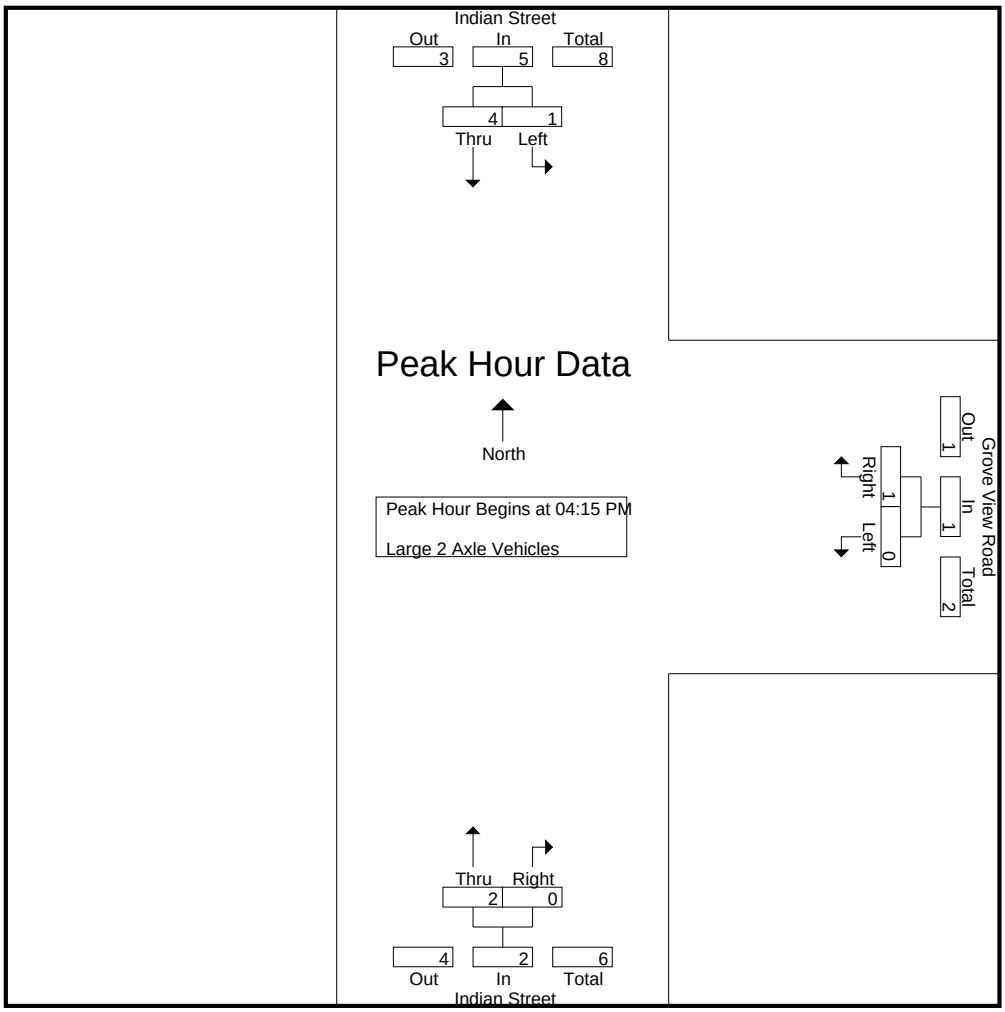

Peak Hour Analysis From 04:15 PM to 05:00 PM - Peak 1 of 1
Peak Hour for Each Approach Begins at:

	04:15 PM			04:15 PM			04:15 PM		
+0 mins.	**1**	**2**	**3**	0	**1**	**1**	0	0	0
+15 mins.	0	0	0	0	0	0	0	0	0
+30 mins.	0	2	2	0	0	0	**2**	0	**2**
+45 mins.	0	0	0	0	0	0	0	0	0
Total Volume	1	4	5	0	1	1	2	0	2
% App. Total	20	80		0	100		100	0	
PHF	.250	.500	.417	.000	.250	.250	.250	.000	.250

Counts Unlimited
PO Box 1178
Corona, CA 92878
(951) 268-6268

City of Moreno Valley
N/S: Indian Street
E/W: Grove View Road
Weather: Clear

File Name : MRVINGRPM
Site Code : 05115699
Start Date : 12/16/2015
Page No : 1

Groups Printed- 3 Axle Vehicles

	Indian Street Southbound			Grove View Road Westbound			Indian Street Northbound			
Start Time	Left	Thru	App. Total	Left	Right	App. Total	Thru	Right	App. Total	Int. Total
04:00 PM	0	1	1	0	0	0	2	0	2	3
04:15 PM	0	1	1	0	0	0	2	0	2	3
04:30 PM	0	0	0	0	0	0	7	2	9	9
04:45 PM	0	0	0	0	0	0	5	0	5	5
Total	0	2	2	0	0	0	16	2	18	20
05:00 PM	0	0	0	0	0	0	5	1	6	6
05:15 PM	0	0	0	0	0	0	3	0	3	3
05:30 PM	0	0	0	0	0	0	5	0	5	5
05:45 PM	0	1	1	0	0	0	7	0	7	8
Total	0	1	1	0	0	0	20	1	21	22
Grand Total	0	3	3	0	0	0	36	3	39	42
Apprch %	0	100		0	0		92.3	7.7		
Total %	0	7.1	7.1	0	0	0	85.7	7.1	92.9	

	Indian Street Southbound			Grove View Road Westbound			Indian Street Northbound			
Start Time	Left	Thru	App. Total	Left	Right	App. Total	Thru	Right	App. Total	Int. Total
Peak Hour Analysis From 04:15 PM to 05:00 PM - Peak 1 of 1										
Peak Hour for Entire Intersection Begins at 04:15 PM										
04:15 PM	0	**1**	**1**	0	0	0	2	0	2	3
04:30 PM	0	0	0	0	0	0	**7**	**2**	**9**	**9**
04:45 PM	0	0	0	0	0	0	5	0	5	5
05:00 PM	0	0	0	0	0	0	5	1	6	6
Total Volume	0	1	1	0	0	0	19	3	22	23
% App. Total	0	100		0	0		86.4	13.6		
PHF	.000	.250	.250	.000	.000	.000	.679	.375	.611	.639

Counts Unlimited
PO Box 1178
Corona, CA 92878
(951) 268-6268

City of Moreno Valley
N/S: Indian Street
E/W: Grove View Road
Weather: Clear

File Name : MRVINGRPM
Site Code : 05115699
Start Date : 12/16/2015
Page No : 2

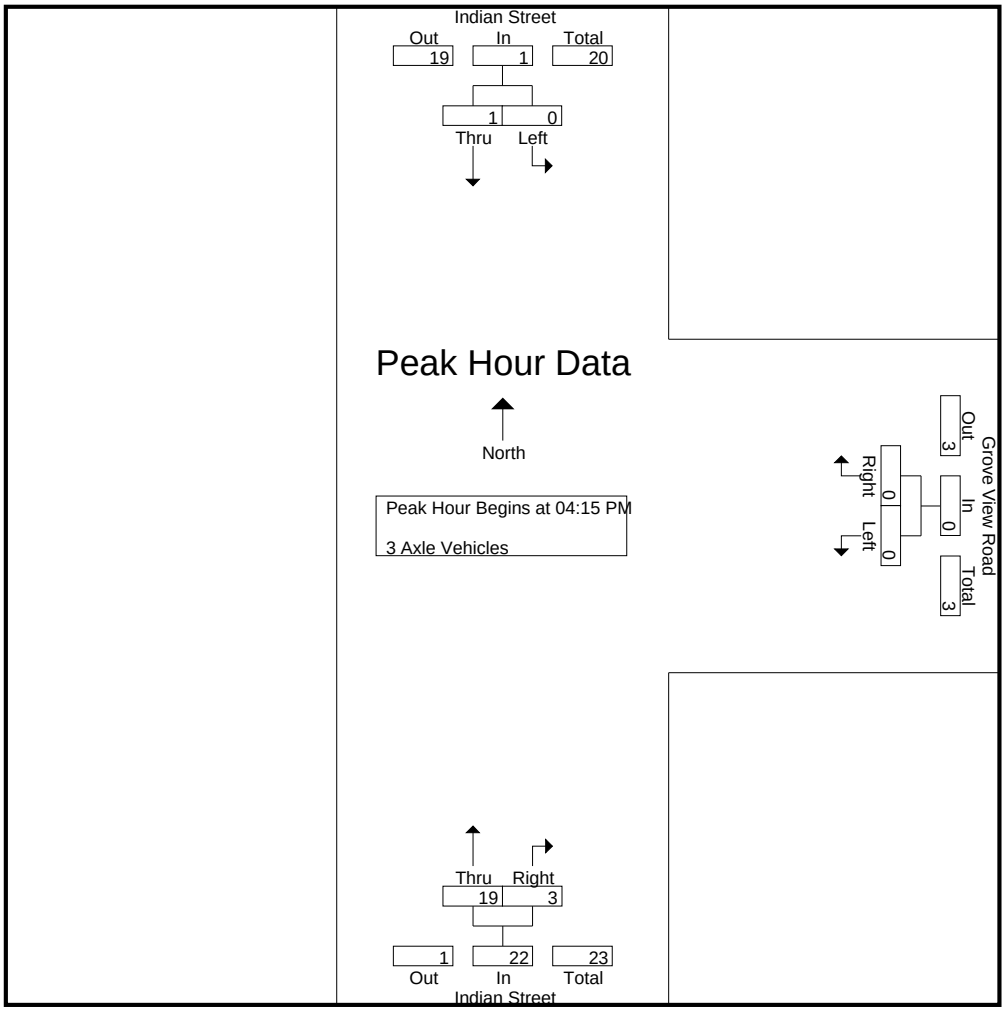

Peak Hour Analysis From 04:15 PM to 05:00 PM - Peak 1 of 1
Peak Hour for Each Approach Begins at:

	04:15 PM			04:15 PM			04:15 PM		
+0 mins.	0	**1**	**1**	0	0	0	2	0	2
+15 mins.	0	0	0	0	0	0	**7**	**2**	**9**
+30 mins.	0	0	0	0	0	0	5	0	5
+45 mins.	0	0	0	0	0	0	5	1	6
Total Volume	0	1	1	0	0	0	19	3	22
% App. Total	0	100		0	0		86.4	13.6	
PHF	.000	.250	.250	.000	.000	.000	.679	.375	.611

Counts Unlimited
PO Box 1178
Corona, CA 92878
(951) 268-6268

City of Moreno Valley
N/S: Indian Street
E/W: Grove View Road
Weather: Clear

File Name : MRVINGRPM
Site Code : 05115699
Start Date : 12/16/2015
Page No : 1

Groups Printed- 4+ Axle Trucks

	Indian Street Southbound			Grove View Road Westbound			Indian Street Northbound			
Start Time	Left	Thru	App. Total	Left	Right	App. Total	Thru	Right	App. Total	Int. Total
04:00 PM	0	6	6	0	0	0	5	1	6	12
04:15 PM	2	6	8	2	0	2	0	2	2	12
04:30 PM	0	1	1	1	0	1	2	2	4	6
04:45 PM	0	5	5	1	1	2	5	0	5	12
Total	2	18	20	4	1	5	12	5	17	42
05:00 PM	0	3	3	0	0	0	1	2	3	6
05:15 PM	0	7	7	1	0	1	3	2	5	13
05:30 PM	0	4	4	1	0	1	0	1	1	6
05:45 PM	0	5	5	0	0	0	2	0	2	7
Total	0	19	19	2	0	2	6	5	11	32
Grand Total	2	37	39	6	1	7	18	10	28	74
Apprch %	5.1	94.9		85.7	14.3		64.3	35.7		
Total %	2.7	50	52.7	8.1	1.4	9.5	24.3	13.5	37.8	

	Indian Street Southbound			Grove View Road Westbound			Indian Street Northbound			
Start Time	Left	Thru	App. Total	Left	Right	App. Total	Thru	Right	App. Total	Int. Total
Peak Hour Analysis From 04:15 PM to 05:00 PM - Peak 1 of 1										
Peak Hour for Entire Intersection Begins at 04:15 PM										
04:15 PM	**2**	**6**	**8**	**2**	0	**2**	0	**2**	2	**12**
04:30 PM	0	1	1	1	0	1	2	2	4	6
04:45 PM	0	5	5	1	**1**	2	**5**	0	**5**	12
05:00 PM	0	3	3	0	0	0	1	2	3	6
Total Volume	2	15	17	4	1	5	8	6	14	36
% App. Total	11.8	88.2		80	20		57.1	42.9		
PHF	.250	.625	.531	.500	.250	.625	.400	.750	.700	.750

Counts Unlimited
PO Box 1178
Corona, CA 92878
(951) 268-6268

City of Moreno Valley
N/S: Indian Street
E/W: Grove View Road
Weather: Clear

File Name : MRVINGRPM
Site Code : 05115699
Start Date : 12/16/2015
Page No : 2

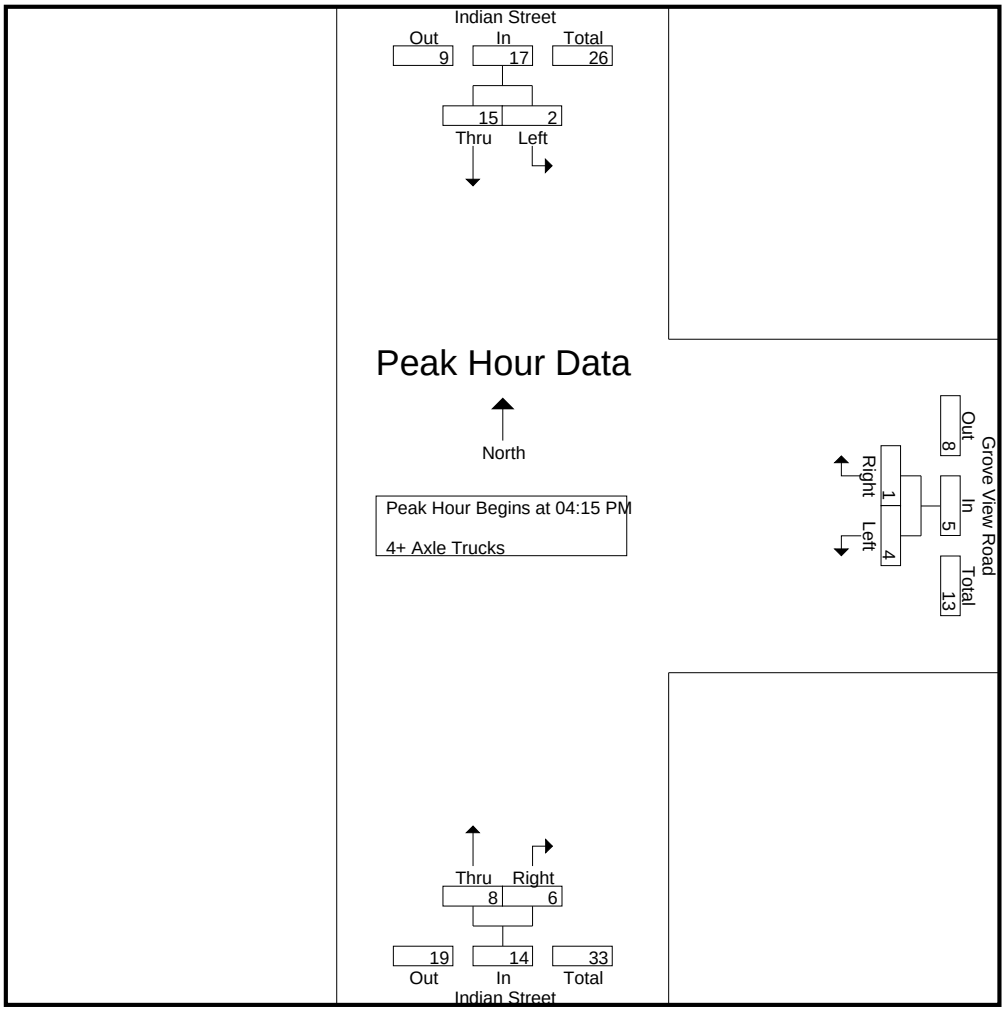

Peak Hour Analysis From 04:15 PM to 05:00 PM - Peak 1 of 1
Peak Hour for Each Approach Begins at:

	04:15 PM			04:15 PM			04:15 PM		
+0 mins.	**2**	**6**	**8**	**2**	0	**2**	0	**2**	2
+15 mins.	0	1	1	1	0	1	2	2	4
+30 mins.	0	5	5	1	**1**	2	**5**	0	**5**
+45 mins.	0	3	3	0	0	0	1	2	3
Total Volume	2	15	17	4	1	5	8	6	14
% App. Total	11.8	88.2		80	20		57.1	42.9	
PHF	.250	.625	.531	.500	.250	.625	.400	.750	.700

Location: Moreno Valley
N/S: Indian Street
E/W: Grove View Road

Site Code: 051-15699
Date: 12/16/2015
Weather: Clear

PEDESTRIANS

	North Leg Indian Street	East Leg Grove View Road	South Leg Indian Street	West Leg Grove View Road	TOTAL
7:00 AM	0	0	0	0	0
7:15 AM	0	0	0	0	0
7:30 AM	0	0	0	0	0
7:45 AM	0	0	0	0	0
8:00 AM	0	0	0	0	0
8:15 AM	0	0	0	0	0
8:30 AM	0	0	0	0	0
8:45 AM	0	0	0	0	0
TOTAL VOLUMES:	0	0	0	0	0

	North Leg Indian Street	East Leg Grove View Road	South Leg Indian Street	West Leg Grove View Road	TOTAL
4:00 PM	0	0	0	0	0
4:15 PM	0	0	0	0	0
4:30 PM	0	0	0	0	0
4:45 PM	0	1 1	0	0	1
5:00 PM	0	0	0	0	0
5:15 PM	0	0	0	0	0
5:30 PM	0	0	0	0	0
5:45 PM	0	0	0	0	0
TOTAL VOLUMES:	0	1	0	0	1

Counts Unlimited, Inc.
PO Box 1178
Corona, CA 92878
951-268-6268

Location: Moreno Valley
N/S: Indian Street
E/W: Grove View Road

Site Code: 051-15699
Date: 12/16/2015
Weather: Clear

BICYCLES

	North Leg Indian Street	East Leg Grove View Road	South Leg Indian Street	West Leg Grove View Road	TOTAL
7:00 AM	0	0	0	1	1
7:15 AM	0	0	0	0	0
7:30 AM	0	0	0	1 0	0
7:45 AM	0	0	0	0	0
8:00 AM	0	0	0	0	0
8:15 AM	0	0	0	0	0
8:30 AM	0	0	0	0	0
8:45 AM	0	0	0	0	0
TOTAL VOLUMES:	0	0	0	1	1

	North Leg Indian Street	East Leg Grove View Road	South Leg Indian Street	West Leg Grove View Road	TOTAL
4:00 PM	0	0	0	0	0
4:15 PM	0	0	0	0	0
4:30 PM	0	0	0	0	0
4:45 PM	0	0	0	0	0
5:00 PM	0	0	0	0	0
5:15 PM	0	0	0	0	0
5:30 PM	0	0	0	0	0
5:45 PM	0	0	0	0	0
TOTAL VOLUMES:	0	0	0	0	0

Counts Unlimited, Inc.
PO Box 1178
Corona, CA 92878
951-268-6268

Counts Unlimited
PO Box 1178
Corona, CA 92878
(951) 268-6268

City of Perris
N/S: Indian Avenue
E/W: Harley Knox Boulevard
Weather: Clear

File Name : PERINHAAM
Site Code : 05115699
Start Date : 12/16/2015
Page No : 1

Groups Printed- Passenger Vehicles - Large 2 Axle Vehicles - 3 Axle Vehicles - 4+ Axle Trucks

	Indian Street Southbound					Harley Knox Boulevard Westbound					Indian Avenue Northbound					Harley Knox Boulevard Eastbound							
Start Time	Left	Thru	Right	RTOR	App. Total	Left	Thru	Right	RTOR	App. Total	Left	Thru	Right	RTOR	App. Total	Left	Thru	Right	RTOR	App. Total	Exclu. Total	Inclu. Total	Int. Total
07:00 AM	1	11	44	7	56	3	148	3	0	154	15	22	4	3	41	37	68	6	0	111	10	362	372
07:15 AM	1	15	21	6	37	4	107	2	1	113	16	31	4	4	51	46	60	6	0	112	11	313	324
07:30 AM	0	7	30	8	37	1	89	4	3	94	13	29	3	2	45	38	80	10	1	128	14	304	318
07:45 AM	2	16	28	8	46	3	85	6	2	94	13	54	5	4	72	54	71	12	6	137	20	349	369
Total	4	49	123	29	176	11	429	15	6	455	57	136	16	13	209	175	279	34	7	488	55	1328	1383
08:00 AM	1	10	19	6	30	2	61	0	0	63	11	24	2	1	37	40	50	12	3	102	10	232	242
08:15 AM	0	17	32	10	49	2	44	2	1	48	5	17	1	0	23	18	27	8	2	53	13	173	186
08:30 AM	2	8	18	5	28	0	35	4	1	39	7	16	1	0	24	35	32	4	1	71	7	162	169
08:45 AM	1	5	27	10	33	2	32	6	2	40	9	8	0	0	17	22	28	3	2	53	14	143	157
Total	4	40	96	31	140	6	172	12	4	190	32	65	4	1	101	115	137	27	8	279	44	710	754
Grand Total	8	89	219	60	316	17	601	27	10	645	89	201	20	14	310	290	416	61	15	767	99	2038	2137
Apprch %	2.5	28.2	69.3			2.6	93.2	4.2			28.7	64.8	6.5			37.8	54.2	8					
Total %	0.4	4.4	10.7		15.5	0.8	29.5	1.3		31.6	4.4	9.9	1		15.2	14.2	20.4	3		37.6	4.6	95.4	
Passenger Vehicles	6	73	149		274	13	569	20		611	74	178	19		285	227	380	46		663	0	0	1833
% Passenger Vehicles	75	82	68	76.7	72.9	76.5	94.7	74.1	90	93.3	83.1	88.6	95	100	88	78.3	91.3	75.4	66.7	84.8	0	0	85.8
Large 2 Axle Vehicles	0	9	17		33	1	9	0		10	4	6	1		11	11	16	5		34	0	0	88
% Large 2 Axle Vehicles	0	10.1	7.8	11.7	8.8	5.9	1.5	0	0	1.5	4.5	3	5	0	3.4	3.8	3.8	8.2	13.3	4.3	0	0	4.1
3 Axle Vehicles	1	1	12		16	3	5	2		10	5	5	0		10	15	6	4		26	0	0	62
% 3 Axle Vehicles	12.5	1.1	5.5	3.3	4.3	17.6	0.8	7.4	0	1.5	5.6	2.5	0	0	3.1	5.2	1.4	6.6	6.7	3.3	0	0	2.9
4+ Axle Trucks	1	6	41		53	0	18	5		24	6	12	0		18	37	14	6		59	0	0	154
% 4+ Axle Trucks	12.5	6.7	18.7	8.3	14.1	0	3	18.5	10	3.7	6.7	6	0	0	5.6	12.8	3.4	9.8	13.3	7.5	0	0	7.2

	Indian Street Southbound				Harley Knox Boulevard Westbound				Indian Avenue Northbound				Harley Knox Boulevard Eastbound				
Start Time	Left	Thru	Right	App. Total	Left	Thru	Right	App. Total	Left	Thru	Right	App. Total	Left	Thru	Right	App. Total	Int. Total
Peak Hour Analysis From 07:00 AM to 08:45 AM - Peak 1 of 1																	
Peak Hour for Entire Intersection Begins at 07:00 AM																	
07:00 AM	1	11	**44**	**56**	3	**148**	3	**154**	15	22	4	41	37	68	6	111	**362**
07:15 AM	1	15	21	37	**4**	107	2	113	**16**	31	4	51	46	60	6	112	313
07:30 AM	0	7	30	37	1	89	4	94	13	29	3	45	38	**80**	10	128	304
07:45 AM	**2**	**16**	28	46	3	85	**6**	94	13	**54**	**5**	**72**	**54**	71	**12**	**137**	349
Total Volume	4	49	123	176	11	429	15	455	57	136	16	209	175	279	34	488	1328
% App. Total	2.3	27.8	69.9		2.4	94.3	3.3		27.3	65.1	7.7		35.9	57.2	7		
PHF	.500	.766	.699	.786	.688	.725	.625	.739	.891	.630	.800	.726	.810	.872	.708	.891	.917

Counts Unlimited
PO Box 1178
Corona, CA 92878
(951) 268-6268

City of Perris
N/S: Indian Avenue
E/W: Harley Knox Boulevard
Weather: Clear

File Name : PERINHAAM
Site Code : 05115699
Start Date : 12/16/2015
Page No : 2

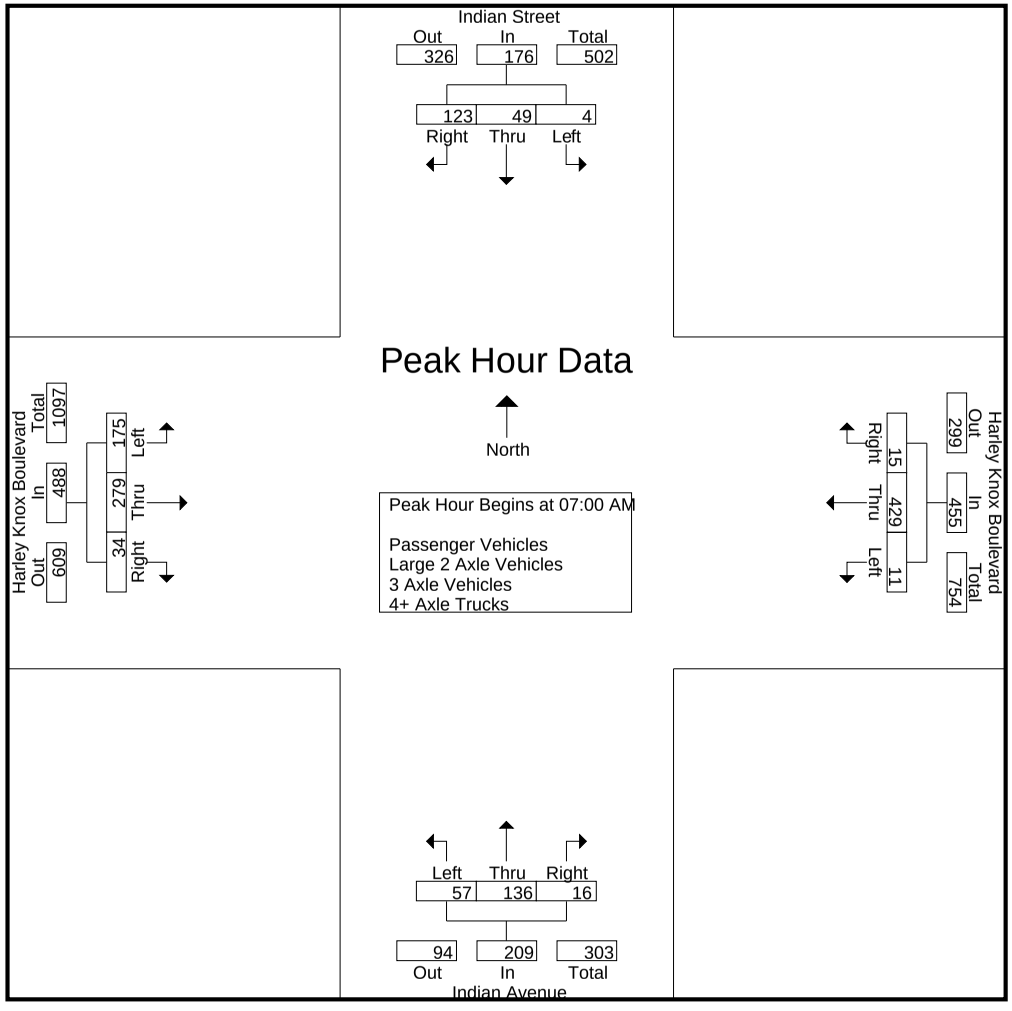

Counts Unlimited
PO Box 1178
Corona, CA 92878
(951) 268-6268

City of Perris
N/S: Indian Avenue
E/W: Harley Knox Boulevard
Weather: Clear

File Name : PERINHAAM
Site Code : 05115699
Start Date : 12/16/2015
Page No : 3

	Indian Street Southbound				Harley Knox Boulevard Westbound				Indian Avenue Northbound				Harley Knox Boulevard Eastbound				
Start Time	Left	Thru	Right	App. Total	Left	Thru	Right	App. Total	Left	Thru	Right	App. Total	Left	Thru	Right	App. Total	Int. Total
Peak Hour Analysis From 07:00 AM to 08:45 AM - Peak 1 of 1																	
Peak Hour for Each Approach Begins at:																	
	07:00 AM				07:00 AM				07:00 AM				07:00 AM				
+0 mins.	1	11	**44**	**56**	3	**148**	3	**154**	15	22	4	41	37	68	6	111	
+15 mins.	1	15	21	37	**4**	107	2	113	**16**	31	4	51	46	60	6	112	
+30 mins.	0	7	30	37	1	89	4	94	13	29	3	45	38	**80**	10	128	
+45 mins.	**2**	**16**	28	46	3	85	**6**	94	13	**54**	**5**	**72**	**54**	71	**12**	**137**	
Total Volume	4	49	123	176	11	429	15	455	57	136	16	209	175	279	34	488	
% App. Total	2.3	27.8	69.9		2.4	94.3	3.3		27.3	65.1	7.7		35.9	57.2	7		
PHF	.500	.766	.699	.786	.688	.725	.625	.739	.891	.630	.800	.726	.810	.872	.708	.891	

Counts Unlimited
PO Box 1178
Corona, CA 92878
(951) 268-6268

City of Perris
N/S: Indian Avenue
E/W: Harley Knox Boulevard
Weather: Clear

File Name : PERINHAAM
Site Code : 05115699
Start Date : 12/16/2015
Page No : 1

Groups Printed- Passenger Vehicles

	Indian Street Southbound					Harley Knox Boulevard Westbound					Indian Avenue Northbound					Harley Knox Boulevard Eastbound							
Start Time	Left	Thru	Right	RTOR	App. Total	Left	Thru	Right	RTOR	App. Total	Left	Thru	Right	RTOR	App. Total	Left	Thru	Right	RTOR	App. Total	Exclu. Total	Inclu. Total	Int. Total
07:00 AM	1	9	38	6	48	2	147	2	0	151	15	20	4	3	39	29	66	3	0	98	9	336	345
07:15 AM	1	14	12	4	27	2	104	1	1	107	14	30	4	4	48	33	54	5	0	92	9	274	283
07:30 AM	0	5	24	6	29	1	85	3	3	89	12	28	3	2	43	34	75	8	1	117	12	278	290
07:45 AM	1	12	18	7	31	2	80	6	2	88	11	49	5	4	65	50	67	10	4	127	17	311	328
Total	3	40	92	23	135	7	416	12	6	435	52	127	16	13	195	146	262	26	5	434	47	1199	1246
08:00 AM	0	7	8	3	15	2	56	0	0	58	9	20	2	1	31	32	44	11	3	87	7	191	198
08:15 AM	0	14	20	7	34	2	41	2	1	45	4	14	1	0	19	12	22	5	1	39	9	137	146
08:30 AM	2	8	10	3	20	0	30	2	0	32	5	11	0	0	16	23	29	2	0	54	3	122	125
08:45 AM	1	4	19	10	24	2	26	4	2	32	4	6	0	0	10	14	23	2	1	39	13	105	118
Total	3	33	57	23	93	6	153	8	3	167	22	51	3	1	76	81	118	20	5	219	32	555	587
Grand Total	6	73	149	46	228	13	569	20	9	602	74	178	19	14	271	227	380	46	10	653	79	1754	1833
Apprch %	2.6	32	65.4			2.2	94.5	3.3			27.3	65.7	7			34.8	58.2	7					
Total %	0.3	4.2	8.5		13	0.7	32.4	1.1		34.3	4.2	10.1	1.1		15.5	12.9	21.7	2.6		37.2	4.3	95.7	

	Indian Street Southbound				Harley Knox Boulevard Westbound				Indian Avenue Northbound				Harley Knox Boulevard Eastbound				
Start Time	Left	Thru	Right	App. Total	Left	Thru	Right	App. Total	Left	Thru	Right	App. Total	Left	Thru	Right	App. Total	Int. Total
Peak Hour Analysis From 07:00 AM to 07:45 AM - Peak 1 of 1																	
Peak Hour for Entire Intersection Begins at 07:00 AM																	
07:00 AM	**1**	9	**38**	**48**	**2**	**147**	2	**151**	**15**	20	4	39	29	66	3	98	**336**
07:15 AM	1	**14**	12	27	2	104	1	107	14	30	4	48	33	54	5	92	274
07:30 AM	0	5	24	29	1	85	3	89	12	28	3	43	34	**75**	8	117	278
07:45 AM	1	12	18	31	2	80	**6**	88	11	**49**	**5**	**65**	**50**	67	**10**	**127**	311
Total Volume	3	40	92	135	7	416	12	435	52	127	16	195	146	262	26	434	1199
% App. Total	2.2	29.6	68.1		1.6	95.6	2.8		26.7	65.1	8.2		33.6	60.4	6		
PHF	.750	.714	.605	.703	.875	.707	.500	.720	.867	.648	.800	.750	.730	.873	.650	.854	.892

Counts Unlimited
PO Box 1178
Corona, CA 92878
(951) 268-6268

City of Perris
N/S: Indian Avenue
E/W: Harley Knox Boulevard
Weather: Clear

File Name : PERINHAAM
Site Code : 05115699
Start Date : 12/16/2015
Page No : 2

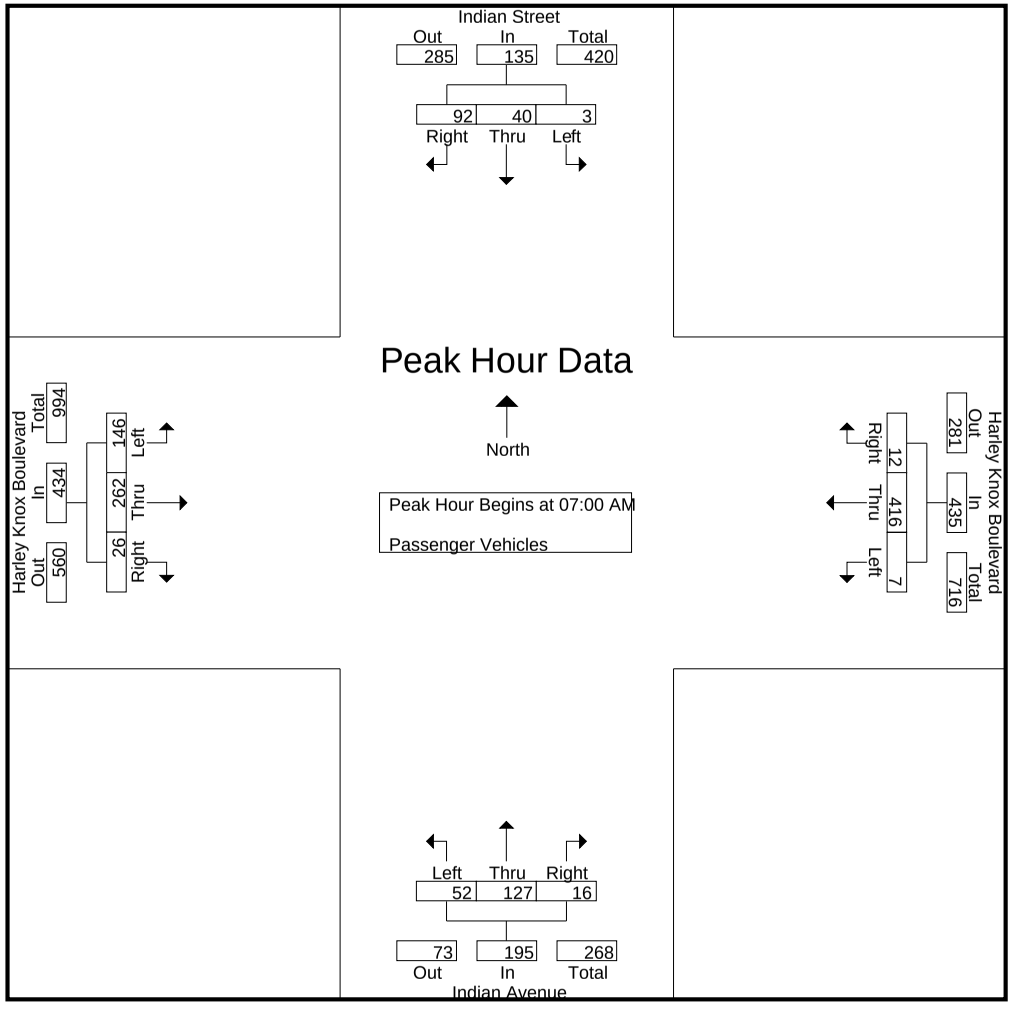

Counts Unlimited
PO Box 1178
Corona, CA 92878
(951) 268-6268

City of Perris
N/S: Indian Avenue
E/W: Harley Knox Boulevard
Weather: Clear

File Name : PERINHAAM
Site Code : 05115699
Start Date : 12/16/2015
Page No : 3

	Indian Street Southbound				Harley Knox Boulevard Westbound				Indian Avenue Northbound				Harley Knox Boulevard Eastbound				
Start Time	Left	Thru	Right	App. Total	Left	Thru	Right	App. Total	Left	Thru	Right	App. Total	Left	Thru	Right	App. Total	Int. Total
Peak Hour Analysis From 07:00 AM to 07:45 AM - Peak 1 of 1																	
Peak Hour for Each Approach Begins at:																	
	07:00 AM				07:00 AM				07:00 AM				07:00 AM				
+0 mins.	**1**	9	**38**	**48**	**2**	**147**	2	**151**	**15**	20	4	39	29	66	3	98	
+15 mins.	1	**14**	12	27	2	104	1	107	14	30	4	48	33	54	5	92	
+30 mins.	0	5	24	29	1	85	3	89	12	28	3	43	34	**75**	8	117	
+45 mins.	1	12	18	31	2	80	**6**	88	11	**49**	**5**	**65**	**50**	67	**10**	**127**	
Total Volume	3	40	92	135	7	416	12	435	52	127	16	195	146	262	26	434	
% App. Total	2.2	29.6	68.1		1.6	95.6	2.8		26.7	65.1	8.2		33.6	60.4	6		
PHF	.750	.714	.605	.703	.875	.707	.500	.720	.867	.648	.800	.750	.730	.873	.650	.854	

Counts Unlimited
PO Box 1178
Corona, CA 92878
(951) 268-6268

City of Perris
N/S: Indian Avenue
E/W: Harley Knox Boulevard
Weather: Clear

File Name : PERINHAAM
Site Code : 05115699
Start Date : 12/16/2015
Page No : 1

Groups Printed- Large 2 Axle Vehicles

	Indian Street Southbound					Harley Knox Boulevard Westbound					Indian Avenue Northbound					Harley Knox Boulevard Eastbound							
Start Time	Left	Thru	Right	RTOR	App. Total	Left	Thru	Right	RTOR	App. Total	Left	Thru	Right	RTOR	App. Total	Left	Thru	Right	RTOR	App. Total	Exclu. Total	Inclu. Total	Int. Total
07:00 AM	0	0	0	0	0	1	1	0	0	2	0	0	0	0	0	0	1	0	0	1	0	3	3
07:15 AM	0	0	1	0	1	0	1	0	0	1	0	1	0	0	1	6	2	0	0	8	0	11	11
07:30 AM	0	2	1	1	3	0	1	0	0	1	0	0	0	0	0	0	3	1	0	4	1	8	9
07:45 AM	0	2	3	1	5	0	2	0	0	2	1	2	0	0	3	1	1	1	1	3	2	13	15
Total	0	4	5	2	9	1	5	0	0	6	1	3	0	0	4	7	7	2	1	16	3	35	38
08:00 AM	0	3	2	1	5	0	1	0	0	1	1	0	0	0	1	0	4	1	0	5	1	12	13
08:15 AM	0	1	6	2	7	0	0	0	0	0	0	1	0	0	1	0	2	0	0	2	2	10	12
08:30 AM	0	0	3	2	3	0	1	0	0	1	1	1	1	0	3	3	2	2	1	7	3	14	17
08:45 AM	0	1	1	0	2	0	2	0	0	2	1	1	0	0	2	1	1	0	0	2	0	8	8
Total	0	5	12	5	17	0	4	0	0	4	3	3	1	0	7	4	9	3	1	16	6	44	50
Grand Total	0	9	17	7	26	1	9	0	0	10	4	6	1	0	11	11	16	5	2	32	9	79	88
Apprch %	0	34.6	65.4			10	90	0			36.4	54.5	9.1			34.4	50	15.6					
Total %	0	11.4	21.5		32.9	1.3	11.4	0		12.7	5.1	7.6	1.3		13.9	13.9	20.3	6.3		40.5	10.2	89.8	

	Indian Street Southbound				Harley Knox Boulevard Westbound				Indian Avenue Northbound				Harley Knox Boulevard Eastbound				
Start Time	Left	Thru	Right	App. Total	Left	Thru	Right	App. Total	Left	Thru	Right	App. Total	Left	Thru	Right	App. Total	Int. Total
Peak Hour Analysis From 07:00 AM to 07:45 AM - Peak 1 of 1																	
Peak Hour for Entire Intersection Begins at 07:00 AM																	
07:00 AM	0	0	0	0	**1**	1	0	**2**	0	0	0	0	0	1	0	1	3
07:15 AM	0	0	1	1	0	1	0	1	0	1	0	1	**6**	2	0	**8**	11
07:30 AM	0	**2**	1	3	0	1	0	1	0	0	0	0	0	**3**	**1**	4	8
07:45 AM	0	2	**3**	**5**	0	**2**	0	2	**1**	**2**	0	**3**	1	1	1	3	**13**
Total Volume	0	4	5	9	1	5	0	6	1	3	0	4	7	7	2	16	35
% App. Total	0	44.4	55.6		16.7	83.3	0		25	75	0		43.8	43.8	12.5		
PHF	.000	.500	.417	.450	.250	.625	.000	.750	.250	.375	.000	.333	.292	.583	.500	.500	.673

Counts Unlimited
PO Box 1178
Corona, CA 92878
(951) 268-6268

City of Perris
N/S: Indian Avenue
E/W: Harley Knox Boulevard
Weather: Clear

File Name : PERINHAAM
Site Code : 05115699
Start Date : 12/16/2015
Page No : 2

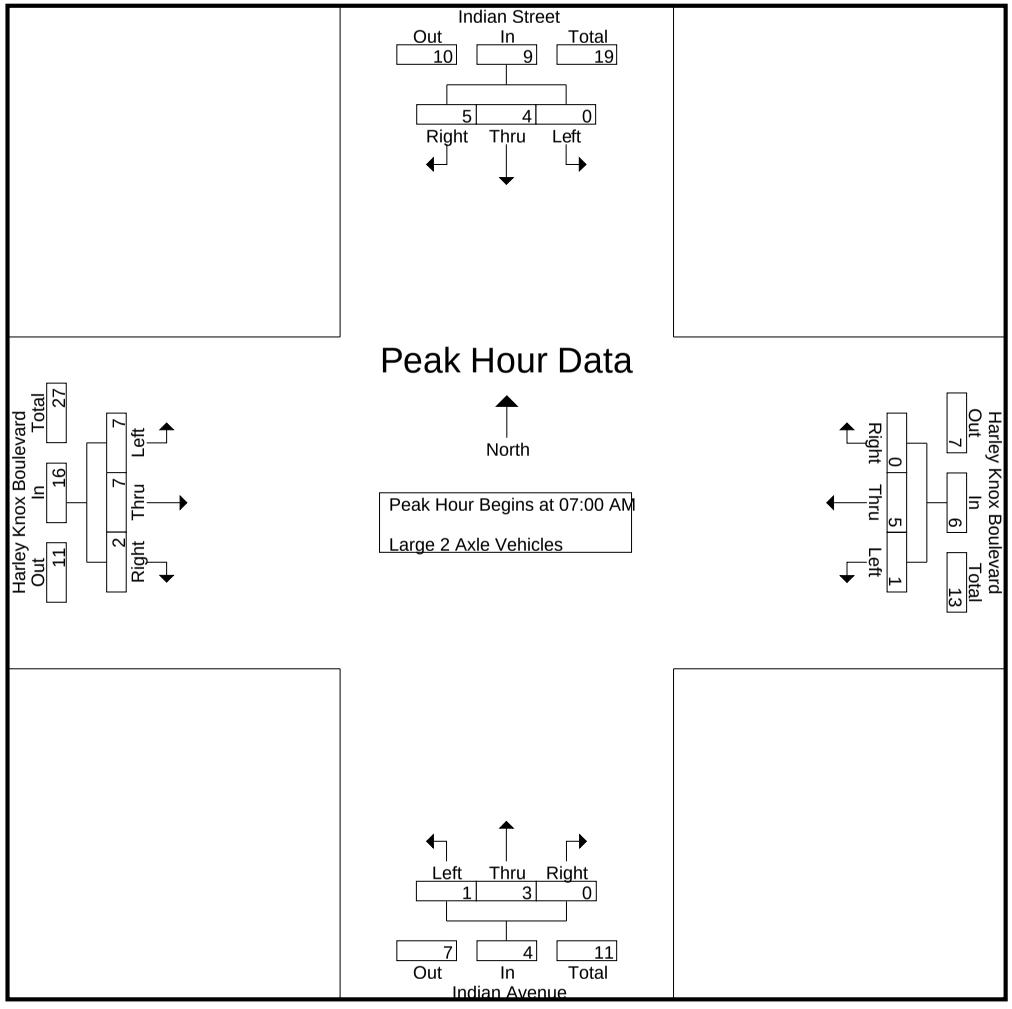

Counts Unlimited
PO Box 1178
Corona, CA 92878
(951) 268-6268

City of Perris
N/S: Indian Avenue
E/W: Harley Knox Boulevard
Weather: Clear

File Name : PERINHAAM
Site Code : 05115699
Start Date : 12/16/2015
Page No : 3

	Indian Street Southbound				Harley Knox Boulevard Westbound				Indian Avenue Northbound				Harley Knox Boulevard Eastbound				
Start Time	Left	Thru	Right	App. Total	Left	Thru	Right	App. Total	Left	Thru	Right	App. Total	Left	Thru	Right	App. Total	Int. Total
Peak Hour Analysis From 07:00 AM to 07:45 AM - Peak 1 of 1																	
Peak Hour for Each Approach Begins at:																	
	07:00 AM				07:00 AM				07:00 AM				07:00 AM				
+0 mins.	0	0	0	0	**1**	1	0	**2**	0	0	0	0	0	1	0	1	
+15 mins.	0	0	1	1	0	1	0	1	0	1	0	1	**6**	2	0	**8**	
+30 mins.	0	**2**	1	3	0	1	0	1	0	0	0	0	0	**3**	**1**	4	
+45 mins.	0	2	**3**	**5**	0	**2**	0	2	**1**	**2**	0	**3**	1	1	1	3	
Total Volume	0	4	5	9	1	5	0	6	1	3	0	4	7	7	2	16	
% App. Total	0	44.4	55.6		16.7	83.3	0		25	75	0		43.8	43.8	12.5		
PHF	.000	.500	.417	.450	.250	.625	.000	.750	.250	.375	.000	.333	.292	.583	.500	.500	

Counts Unlimited
PO Box 1178
Corona, CA 92878
(951) 268-6268

City of Perris
N/S: Indian Avenue
E/W: Harley Knox Boulevard
Weather: Clear

File Name : PERINHAAM
Site Code : 05115699
Start Date : 12/16/2015
Page No : 1

Groups Printed- 3 Axle Vehicles

	Indian Street Southbound					Harley Knox Boulevard Westbound					Indian Avenue Northbound					Harley Knox Boulevard Eastbound							
Start Time	Left	Thru	Right	RTOR	App. Total	Left	Thru	Right	RTOR	App. Total	Left	Thru	Right	RTOR	App. Total	Left	Thru	Right	RTOR	App. Total	Exclu. Total	Inclu. Total	Int. Total
07:00 AM	0	0	0	0	0	0	0	0	0	0	0	0	0	0	0	3	1	0	0	4	0	4	4
07:15 AM	0	0	1	1	1	2	0	1	0	3	2	0	0	0	2	1	0	1	0	2	1	8	9
07:30 AM	0	0	1	0	1	0	2	0	0	2	0	1	0	0	1	2	0	1	0	3	0	7	7
07:45 AM	1	0	2	0	3	1	0	0	0	1	0	1	0	0	1	1	1	0	0	2	0	7	7
Total	1	0	4	1	5	3	2	1	0	6	2	2	0	0	4	7	2	2	0	11	1	26	27
08:00 AM	0	0	2	1	2	0	0	0	0	0	0	1	0	0	1	2	1	0	0	3	1	6	7
08:15 AM	0	1	3	0	4	0	1	0	0	1	1	0	0	0	1	2	1	2	1	5	1	11	12
08:30 AM	0	0	3	0	3	0	1	1	0	2	0	2	0	0	2	2	1	0	0	3	0	10	10
08:45 AM	0	0	0	0	0	0	1	0	0	1	2	0	0	0	2	2	1	0	0	3	0	6	6
Total	0	1	8	1	9	0	3	1	0	4	3	3	0	0	6	8	4	2	1	14	2	33	35
Grand Total	1	1	12	2	14	3	5	2	0	10	5	5	0	0	10	15	6	4	1	25	3	59	62
Apprch %	7.1	7.1	85.7			30	50	20			50	50	0			60	24	16					
Total %	1.7	1.7	20.3		23.7	5.1	8.5	3.4		16.9	8.5	8.5	0		16.9	25.4	10.2	6.8		42.4	4.8	95.2	

	Indian Street Southbound				Harley Knox Boulevard Westbound				Indian Avenue Northbound				Harley Knox Boulevard Eastbound				
Start Time	Left	Thru	Right	App. Total	Left	Thru	Right	App. Total	Left	Thru	Right	App. Total	Left	Thru	Right	App. Total	Int. Total
Peak Hour Analysis From 07:00 AM to 07:45 AM - Peak 1 of 1																	
Peak Hour for Entire Intersection Begins at 07:00 AM																	
07:00 AM	0	0	0	0	0	0	0	0	0	0	0	0	**3**	**1**	0	**4**	4
07:15 AM	0	0	1	1	**2**	0	**1**	**3**	**2**	0	0	**2**	1	0	**1**	2	**8**
07:30 AM	0	0	1	1	0	**2**	0	2	0	**1**	0	1	2	0	1	3	7
07:45 AM	**1**	0	**2**	**3**	1	0	0	1	0	1	0	1	1	1	0	2	7
Total Volume	1	0	4	5	3	2	1	6	2	2	0	4	7	2	2	11	26
% App. Total	20	0	80		50	33.3	16.7		50	50	0		63.6	18.2	18.2		
PHF	.250	.000	.500	.417	.375	.250	.250	.500	.250	.500	.000	.500	.583	.500	.500	.688	.813

Counts Unlimited
PO Box 1178
Corona, CA 92878
(951) 268-6268

City of Perris
N/S: Indian Avenue
E/W: Harley Knox Boulevard
Weather: Clear

File Name : PERINHAAM
Site Code : 05115699
Start Date : 12/16/2015
Page No : 2

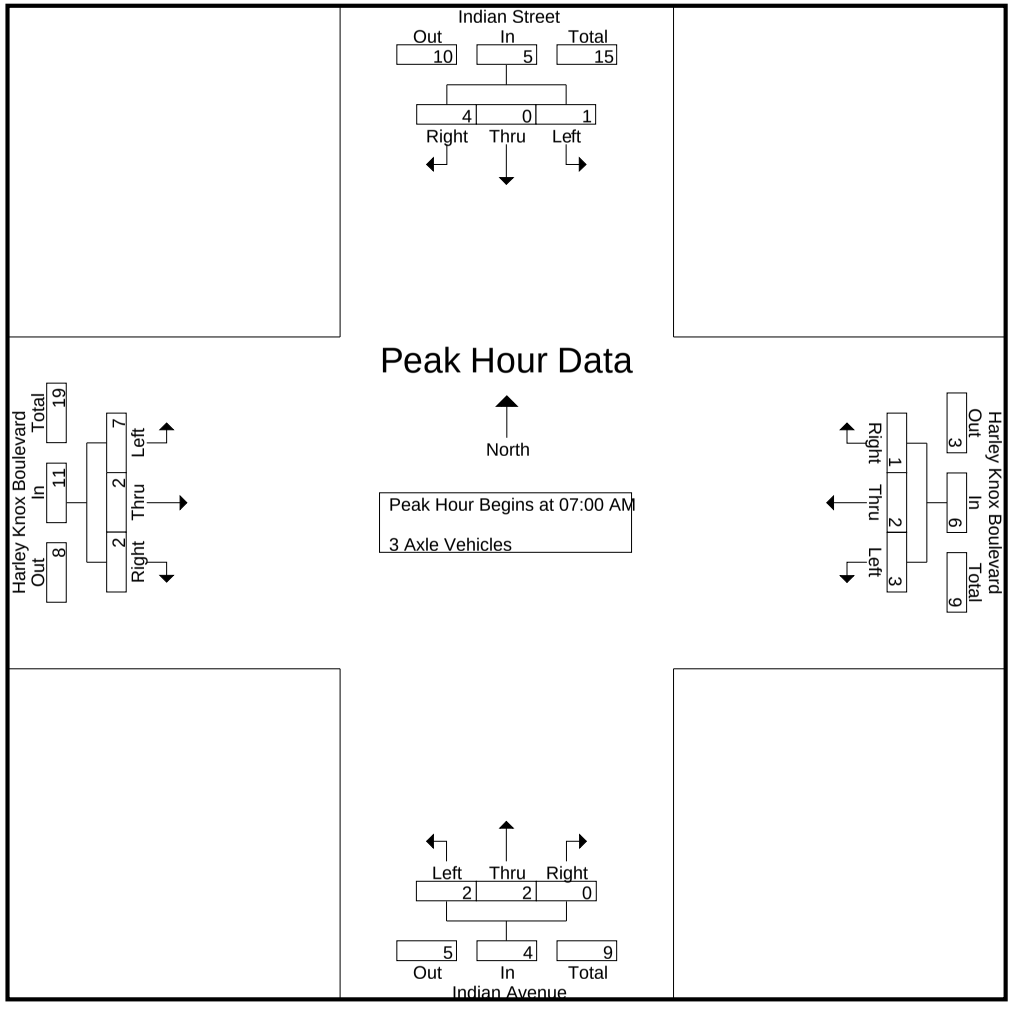

Counts Unlimited
PO Box 1178
Corona, CA 92878
(951) 268-6268

City of Perris
N/S: Indian Avenue
E/W: Harley Knox Boulevard
Weather: Clear

File Name : PERINHAAM
Site Code : 05115699
Start Date : 12/16/2015
Page No : 3

	Indian Street Southbound				Harley Knox Boulevard Westbound				Indian Avenue Northbound				Harley Knox Boulevard Eastbound				
Start Time	Left	Thru	Right	App. Total	Left	Thru	Right	App. Total	Left	Thru	Right	App. Total	Left	Thru	Right	App. Total	Int. Total
Peak Hour Analysis From 07:00 AM to 07:45 AM - Peak 1 of 1																	
Peak Hour for Each Approach Begins at:																	
	07:00 AM				07:00 AM				07:00 AM				07:00 AM				
+0 mins.	0	0	0	0	0	0	0	0	0	0	0	0	**3**	**1**	0	**4**	
+15 mins.	0	0	1	1	**2**	0	**1**	**3**	**2**	0	0	**2**	1	0	**1**	2	
+30 mins.	0	0	1	1	0	**2**	0	2	0	**1**	0	1	2	0	1	3	
+45 mins.	**1**	0	**2**	**3**	1	0	0	1	0	1	0	1	1	1	0	2	
Total Volume	1	0	4	5	3	2	1	6	2	2	0	4	7	2	2	11	
% App. Total	20	0	80		50	33.3	16.7		50	50	0		63.6	18.2	18.2		
PHF	.250	.000	.500	.417	.375	.250	.250	.500	.250	.500	.000	.500	.583	.500	.500	.688	

Counts Unlimited
PO Box 1178
Corona, CA 92878
(951) 268-6268

City of Perris
N/S: Indian Avenue
E/W: Harley Knox Boulevard
Weather: Clear

File Name : PERINHAAM
Site Code : 05115699
Start Date : 12/16/2015
Page No : 1

Groups Printed- 4+ Axle Trucks

	Indian Street Southbound					Harley Knox Boulevard Westbound					Indian Avenue Northbound					Harley Knox Boulevard Eastbound							
Start Time	Left	Thru	Right	RTOR	App. Total	Left	Thru	Right	RTOR	App. Total	Left	Thru	Right	RTOR	App. Total	Left	Thru	Right	RTOR	App. Total	Exclu. Total	Inclu. Total	Int. Total
07:00 AM	0	2	6	1	8	0	0	1	0	1	0	2	0	0	2	5	0	3	0	8	1	19	20
07:15 AM	0	1	7	1	8	0	2	0	0	2	0	0	0	0	0	6	4	0	0	10	1	20	21
07:30 AM	0	0	4	1	4	0	1	1	0	2	1	0	0	0	1	2	2	0	0	4	1	11	12
07:45 AM	0	2	5	0	7	0	3	0	0	3	1	2	0	0	3	2	2	1	1	5	1	18	19
Total	0	5	22	3	27	0	6	2	0	8	2	4	0	0	6	15	8	4	1	27	4	68	72
08:00 AM	1	0	7	1	8	0	4	0	0	4	1	3	0	0	4	6	1	0	0	7	1	23	24
08:15 AM	0	1	3	1	4	0	2	0	0	2	0	2	0	0	2	4	2	1	0	7	1	15	16
08:30 AM	0	0	2	0	2	0	3	1	1	4	1	2	0	0	3	7	0	0	0	7	1	16	17
08:45 AM	0	0	7	0	7	0	3	2	0	5	2	1	0	0	3	5	3	1	1	9	1	24	25
Total	1	1	19	2	21	0	12	3	1	15	4	8	0	0	12	22	6	2	1	30	4	78	82
Grand Total	1	6	41	5	48	0	18	5	1	23	6	12	0	0	18	37	14	6	2	57	8	146	154
Apprch %	2.1	12.5	85.4			0	78.3	21.7			33.3	66.7	0			64.9	24.6	10.5					
Total %	0.7	4.1	28.1		32.9	0	12.3	3.4		15.8	4.1	8.2	0		12.3	25.3	9.6	4.1		39	5.2	94.8	

	Indian Street Southbound				Harley Knox Boulevard Westbound				Indian Avenue Northbound				Harley Knox Boulevard Eastbound				
Start Time	Left	Thru	Right	App. Total	Left	Thru	Right	App. Total	Left	Thru	Right	App. Total	Left	Thru	Right	App. Total	Int. Total
Peak Hour Analysis From 07:00 AM to 07:45 AM - Peak 1 of 1																	
Peak Hour for Entire Intersection Begins at 07:00 AM																	
07:00 AM	0	**2**	6	**8**	0	0	**1**	1	0	**2**	0	2	5	0	**3**	8	19
07:15 AM	0	1	**7**	8	0	2	0	2	0	0	0	0	**6**	**4**	0	**10**	**20**
07:30 AM	0	0	4	4	0	1	1	2	**1**	0	0	1	2	2	0	4	11
07:45 AM	0	2	5	7	0	**3**	0	**3**	1	2	0	**3**	2	2	1	5	18
Total Volume	0	5	22	27	0	6	2	8	2	4	0	6	15	8	4	27	68
% App. Total	0	18.5	81.5		0	75	25		33.3	66.7	0		55.6	29.6	14.8		
PHF	.000	.625	.786	.844	.000	.500	.500	.667	.500	.500	.000	.500	.625	.500	.333	.675	.850

Counts Unlimited
PO Box 1178
Corona, CA 92878
(951) 268-6268

City of Perris
N/S: Indian Avenue
E/W: Harley Knox Boulevard
Weather: Clear

File Name : PERINHAAM
Site Code : 05115699
Start Date : 12/16/2015
Page No : 2

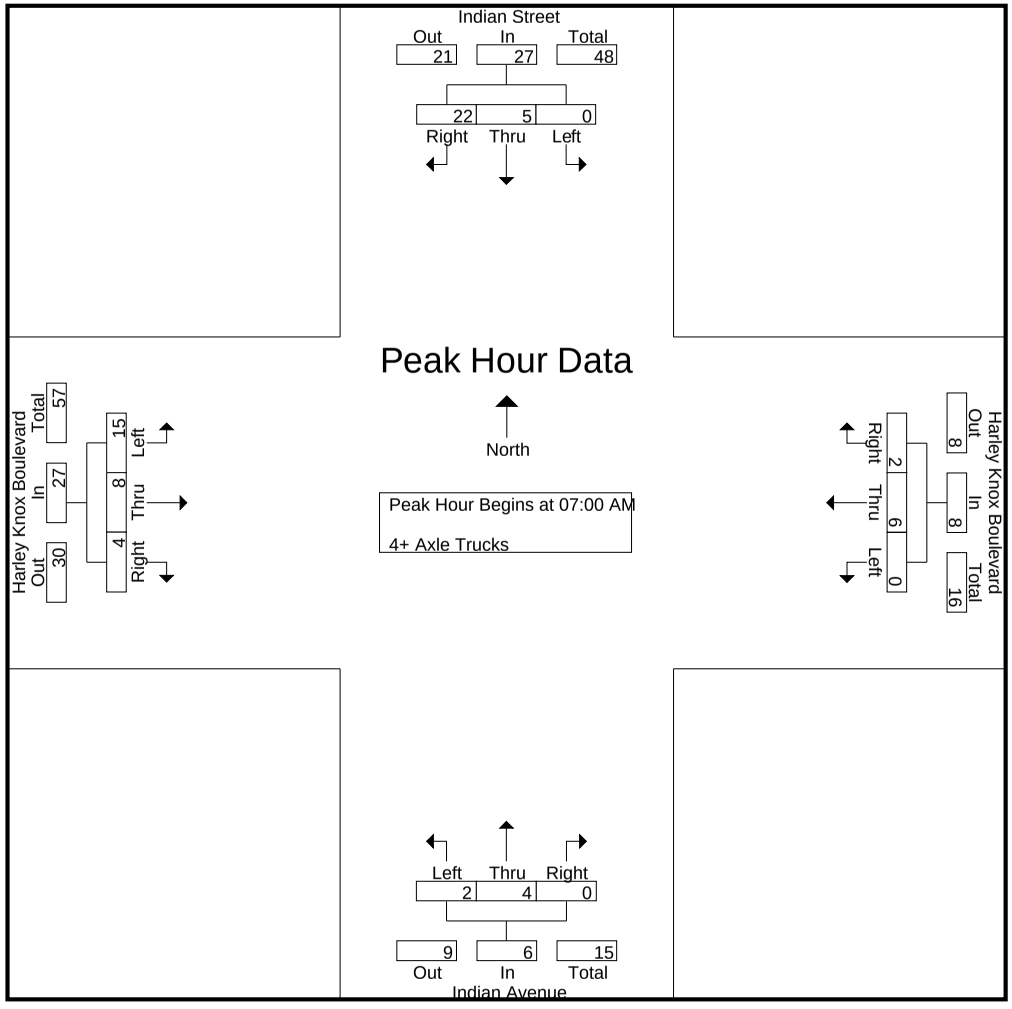

Counts Unlimited
PO Box 1178
Corona, CA 92878
(951) 268-6268

City of Perris
N/S: Indian Avenue
E/W: Harley Knox Boulevard
Weather: Clear

File Name : PERINHAAM
Site Code : 05115699
Start Date : 12/16/2015
Page No : 3

	Indian Street Southbound				Harley Knox Boulevard Westbound				Indian Avenue Northbound				Harley Knox Boulevard Eastbound				
Start Time	Left	Thru	Right	App. Total	Left	Thru	Right	App. Total	Left	Thru	Right	App. Total	Left	Thru	Right	App. Total	Int. Total
Peak Hour Analysis From 07:00 AM to 07:45 AM - Peak 1 of 1																	
Peak Hour for Each Approach Begins at:																	
	07:00 AM				07:00 AM				07:00 AM				07:00 AM				
+0 mins.	0	**2**	6	**8**	0	0	**1**	1	0	**2**	0	2	5	0	**3**	8	
+15 mins.	0	1	**7**	8	0	2	0	2	0	0	0	0	**6**	**4**	0	**10**	
+30 mins.	0	0	4	4	0	1	1	2	**1**	0	0	1	2	2	0	4	
+45 mins.	0	2	5	7	0	**3**	0	**3**	1	2	0	**3**	2	2	1	5	
Total Volume	0	5	22	27	0	6	2	8	2	4	0	6	15	8	4	27	
% App. Total	0	18.5	81.5		0	75	25		33.3	66.7	0		55.6	29.6	14.8		
PHF	.000	.625	.786	.844	.000	.500	.500	.667	.500	.500	.000	.500	.625	.500	.333	.675	

Counts Unlimited
PO Box 1178
Corona, CA 92878
(951) 268-6268

City of Perris
N/S: Indian Avenue
E/W: Harley Knox Boulevard
Weather: Clear

File Name : PERINHAPM
Site Code : 05115699
Start Date : 12/16/2015
Page No : 1

Groups Printed- Passenger Vehicles - Large 2 Axle Vehicles - 3 Axle Vehicles - 4+ Axle Trucks

	Indian Street Southbound					Harley Knox Boulevard Westbound					Indian Avenue Northbound					Harley Knox Boulevard Eastbound							
Start Time	Left	Thru	Right	RTOR	App. Total	Left	Thru	Right	RTOR	App. Total	Left	Thru	Right	RTOR	App. Total	Left	Thru	Right	RTOR	App. Total	Exclu. Total	Inclu. Total	Int. Total
04:00 PM	4	26	55	10	85	3	51	3	1	57	8	33	2	1	43	42	73	9	0	124	12	309	321
04:15 PM	2	18	33	7	53	4	49	1	0	54	5	36	3	1	44	63	68	4	1	135	9	286	295
04:30 PM	2	48	103	27	153	2	58	7	3	67	6	46	8	4	60	86	88	10	3	184	37	464	501
04:45 PM	13	58	138	22	209	4	48	6	5	58	7	38	2	1	47	69	63	11	1	143	29	457	486
Total	21	150	329	66	500	13	206	17	9	236	26	153	15	7	194	260	292	34	5	586	87	1516	1603
05:00 PM	6	33	52	12	91	0	49	6	1	55	13	35	3	2	51	45	64	8	2	117	17	314	331
05:15 PM	6	35	47	8	88	4	25	2	2	31	12	29	2	0	43	35	63	7	2	105	12	267	279
05:30 PM	4	60	89	21	153	1	41	4	0	46	9	46	2	1	57	67	69	5	0	141	22	397	419
05:45 PM	5	44	89	17	138	0	40	8	5	48	6	43	1	0	50	93	63	7	4	163	26	399	425
Total	21	172	277	58	470	5	155	20	8	180	40	153	8	3	201	240	259	27	8	526	77	1377	1454
Grand Total	42	322	606	124	970	18	361	37	17	416	66	306	23	10	395	500	551	61	13	1112	164	2893	3057
Apprch %	4.3	33.2	62.5			4.3	86.8	8.9			16.7	77.5	5.8			45	49.6	5.5					
Total %	1.5	11.1	20.9		33.5	0.6	12.5	1.3		14.4	2.3	10.6	0.8		13.7	17.3	19	2.1		38.4	5.4	94.6	
Passenger Vehicles	41	314	555		1027	12	320	33		382	49	279	22		360	434	523	45		1012	0	0	2781
% Passenger Vehicles	97.6	97.5	91.6	94.4	93.9	66.7	88.6	89.2	100	88.2	74.2	91.2	95.7	100	88.9	86.8	94.9	73.8	76.9	90	0	0	91
Large 2 Axle Vehicles	0	1	4		5	3	6	0		9	4	2	0		6	8	6	1		16	0	0	36
% Large 2 Axle Vehicles	0	0.3	0.7	0	0.5	16.7	1.7	0	0	2.1	6.1	0.7	0	0	1.5	1.6	1.1	1.6	7.7	1.4	0	0	1.2
3 Axle Vehicles	0	1	6		7	3	11	2		16	2	18	1		21	39	6	6		52	0	0	96
% 3 Axle Vehicles	0	0.3	1	0	0.6	16.7	3	5.4	0	3.7	3	5.9	4.3	0	5.2	7.8	1.1	9.8	7.7	4.6	0	0	3.1
4+ Axle Trucks	1	6	41		55	0	24	2		26	11	7	0		18	19	16	9		45	0	0	144
% 4+ Axle Trucks	2.4	1.9	6.8	5.6	5	0	6.6	5.4	0	6	16.7	2.3	0	0	4.4	3.8	2.9	14.8	7.7	4	0	0	4.7

	Indian Street Southbound				Harley Knox Boulevard Westbound				Indian Avenue Northbound				Harley Knox Boulevard Eastbound				
Start Time	Left	Thru	Right	App. Total	Left	Thru	Right	App. Total	Left	Thru	Right	App. Total	Left	Thru	Right	App. Total	Int. Total
Peak Hour Analysis From 04:00 PM to 05:45 PM - Peak 1 of 1																	
Peak Hour for Entire Intersection Begins at 04:15 PM																	
04:15 PM	2	18	33	53	**4**	49	1	54	5	36	3	44	63	68	4	135	286
04:30 PM	2	48	103	153	2	**58**	**7**	**67**	6	**46**	**8**	**60**	**86**	**88**	10	**184**	**464**
04:45 PM	**13**	**58**	**138**	**209**	4	48	6	58	7	38	2	47	69	63	**11**	143	457
05:00 PM	6	33	52	91	0	49	6	55	**13**	35	3	51	45	64	8	117	314
Total Volume	23	157	326	506	10	204	20	234	31	155	16	202	263	283	33	579	1521
% App. Total	4.5	31	64.4		4.3	87.2	8.5		15.3	76.7	7.9		45.4	48.9	5.7		
PHF	.442	.677	.591	.605	.625	.879	.714	.873	.596	.842	.500	.842	.765	.804	.750	.787	.820

Counts Unlimited
PO Box 1178
Corona, CA 92878
(951) 268-6268

City of Perris
N/S: Indian Avenue
E/W: Harley Knox Boulevard
Weather: Clear

File Name : PERINHAPM
Site Code : 05115699
Start Date : 12/16/2015
Page No : 2

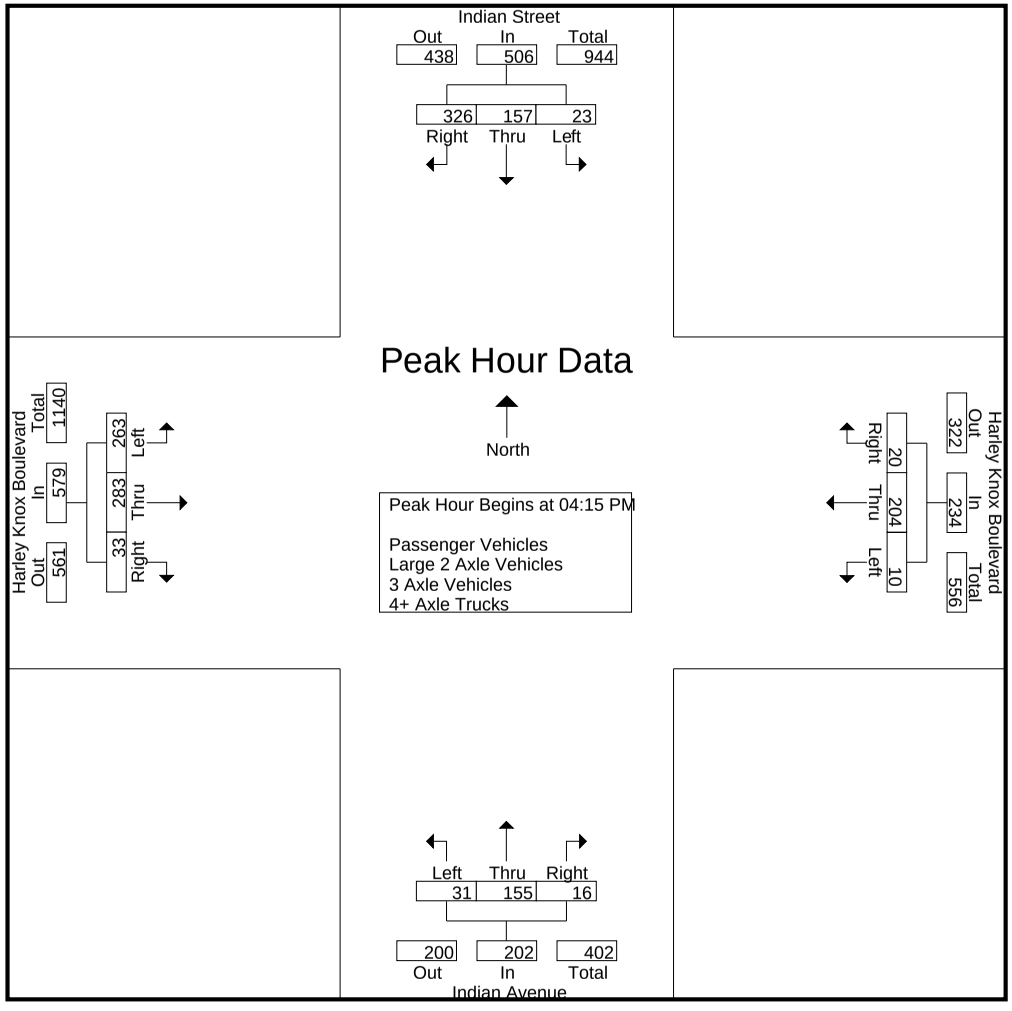

Counts Unlimited
PO Box 1178
Corona, CA 92878
(951) 268-6268

City of Perris
N/S: Indian Avenue
E/W: Harley Knox Boulevard
Weather: Clear

File Name : PERINHAPM
Site Code : 05115699
Start Date : 12/16/2015
Page No : 3

	Indian Street Southbound				Harley Knox Boulevard Westbound				Indian Avenue Northbound				Harley Knox Boulevard Eastbound				
Start Time	Left	Thru	Right	App. Total	Left	Thru	Right	App. Total	Left	Thru	Right	App. Total	Left	Thru	Right	App. Total	Int. Total
Peak Hour Analysis From 04:00 PM to 05:45 PM - Peak 1 of 1																	
Peak Hour for Each Approach Begins at:																	
	04:30 PM				04:00 PM				04:15 PM				04:00 PM				
+0 mins.	2	48	103	153	3	51	3	57	5	36	3	44	42	73	9	124	
+15 mins.	**13**	**58**	**138**	**209**	**4**	49	1	54	6	**46**	**8**	**60**	63	68	4	135	
+30 mins.	6	33	52	91	2	**58**	**7**	**67**	7	38	2	47	**86**	**88**	10	**184**	
+45 mins.	6	35	47	88	4	48	6	58	**13**	35	3	51	69	63	**11**	143	
Total Volume	27	174	340	541	13	206	17	236	31	155	16	202	260	292	34	586	
% App. Total	5	32.2	62.8		5.5	87.3	7.2		15.3	76.7	7.9		44.4	49.8	5.8		
PHF	.519	.750	.616	.647	.813	.888	.607	.881	.596	.842	.500	.842	.756	.830	.773	.796	

Counts Unlimited
PO Box 1178
Corona, CA 92878
(951) 268-6268

City of Perris
N/S: Indian Avenue
E/W: Harley Knox Boulevard
Weather: Clear

File Name : PERINHAPM
Site Code : 05115699
Start Date : 12/16/2015
Page No : 1

Groups Printed- Passenger Vehicles

	Indian Street Southbound					Harley Knox Boulevard Westbound					Indian Avenue Northbound					Harley Knox Boulevard Eastbound							
Start Time	Left	Thru	Right	RTOR	App. Total	Left	Thru	Right	RTOR	App. Total	Left	Thru	Right	RTOR	App. Total	Left	Thru	Right	RTOR	App. Total	Exclu. Total	Inclu. Total	Int. Total
04:00 PM	4	24	46	9	74	1	49	1	1	51	5	29	2	1	36	35	70	6	0	111	11	272	283
04:15 PM	2	17	25	6	44	1	41	1	0	43	3	33	2	1	38	57	61	3	0	121	7	246	253
04:30 PM	2	48	96	25	146	2	50	7	3	59	5	43	8	4	56	68	83	7	2	158	34	419	453
04:45 PM	13	58	129	21	200	3	41	6	5	50	5	35	2	1	42	59	60	7	1	126	28	418	446
Total	21	147	296	61	464	7	181	15	9	203	18	140	14	7	172	219	274	23	3	516	80	1355	1435
05:00 PM	6	33	49	10	88	0	47	4	1	51	13	32	3	2	48	37	60	6	1	103	14	290	304
05:15 PM	5	33	42	8	80	4	22	2	2	28	10	26	2	0	38	30	61	5	2	96	12	242	254
05:30 PM	4	59	84	21	147	1	34	4	0	39	5	42	2	1	49	62	67	4	0	133	22	368	390
05:45 PM	5	42	84	17	131	0	36	8	5	44	3	39	1	0	43	86	61	7	4	154	26	372	398
Total	20	167	259	56	446	5	139	18	8	162	31	139	8	3	178	215	249	22	7	486	74	1272	1346
Grand Total	41	314	555	117	910	12	320	33	17	365	49	279	22	10	350	434	523	45	10	1002	154	2627	2781
Apprch %	4.5	34.5	61			3.3	87.7	9			14	79.7	6.3			43.3	52.2	4.5					
Total %	1.6	12	21.1		34.6	0.5	12.2	1.3		13.9	1.9	10.6	0.8		13.3	16.5	19.9	1.7		38.1	5.5	94.5	

	Indian Street Southbound				Harley Knox Boulevard Westbound				Indian Avenue Northbound				Harley Knox Boulevard Eastbound				
Start Time	Left	Thru	Right	App. Total	Left	Thru	Right	App. Total	Left	Thru	Right	App. Total	Left	Thru	Right	App. Total	Int. Total
Peak Hour Analysis From 04:15 PM to 05:00 PM - Peak 1 of 1																	
Peak Hour for Entire Intersection Begins at 04:15 PM																	
04:15 PM	2	17	25	44	1	41	1	43	3	33	2	38	57	61	3	121	246
04:30 PM	2	48	96	146	2	**50**	**7**	**59**	5	**43**	**8**	**56**	**68**	**83**	**7**	**158**	**419**
04:45 PM	**13**	**58**	**129**	**200**	**3**	41	6	50	5	35	2	42	59	60	7	126	418
05:00 PM	6	33	49	88	0	47	4	51	**13**	32	3	48	37	60	6	103	290
Total Volume	23	156	299	478	6	179	18	203	26	143	15	184	221	264	23	508	1373
% App. Total	4.8	32.6	62.6		3	88.2	8.9		14.1	77.7	8.2		43.5	52	4.5		
PHF	.442	.672	.579	.598	.500	.895	.643	.860	.500	.831	.469	.821	.813	.795	.821	.804	.819

Counts Unlimited
PO Box 1178
Corona, CA 92878
(951) 268-6268

City of Perris
N/S: Indian Avenue
E/W: Harley Knox Boulevard
Weather: Clear

File Name : PERINHAPM
Site Code : 05115699
Start Date : 12/16/2015
Page No : 2

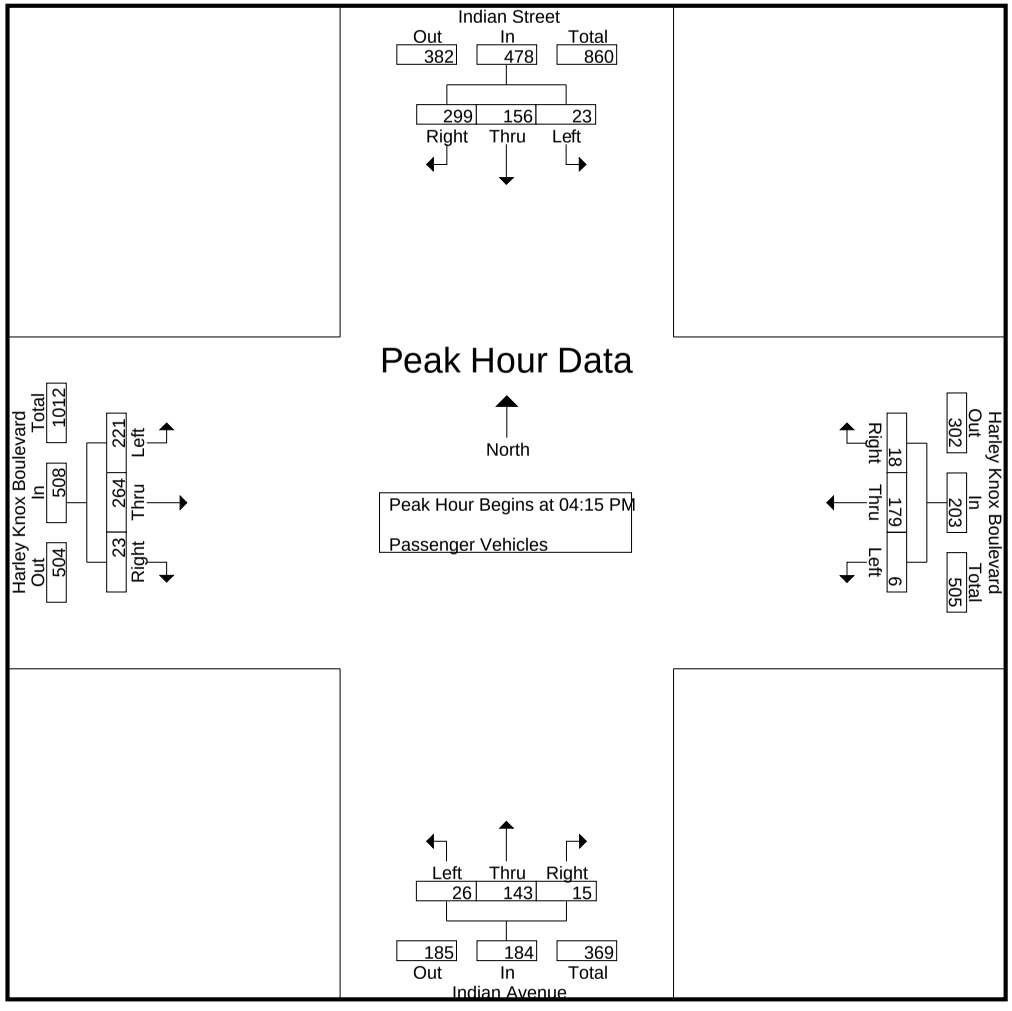

Counts Unlimited
PO Box 1178
Corona, CA 92878
(951) 268-6268

City of Perris
N/S: Indian Avenue
E/W: Harley Knox Boulevard
Weather: Clear

File Name : PERINHAPM
Site Code : 05115699
Start Date : 12/16/2015
Page No : 3

	Indian Street Southbound				Harley Knox Boulevard Westbound				Indian Avenue Northbound				Harley Knox Boulevard Eastbound				
Start Time	Left	Thru	Right	App. Total	Left	Thru	Right	App. Total	Left	Thru	Right	App. Total	Left	Thru	Right	App. Total	Int. Total
Peak Hour Analysis From 04:15 PM to 05:00 PM - Peak 1 of 1																	
Peak Hour for Each Approach Begins at:																	
	04:15 PM				04:15 PM				04:15 PM				04:15 PM				
+0 mins.	2	17	25	44	1	41	1	43	3	33	2	38	57	61	3	121	
+15 mins.	2	48	96	146	2	**50**	**7**	**59**	5	**43**	**8**	**56**	**68**	**83**	**7**	**158**	
+30 mins.	**13**	**58**	**129**	**200**	**3**	41	6	50	5	35	2	42	59	60	7	126	
+45 mins.	6	33	49	88	0	47	4	51	**13**	32	3	48	37	60	6	103	
Total Volume	23	156	299	478	6	179	18	203	26	143	15	184	221	264	23	508	
% App. Total	4.8	32.6	62.6		3	88.2	8.9		14.1	77.7	8.2		43.5	52	4.5		
PHF	.442	.672	.579	.598	.500	.895	.643	.860	.500	.831	.469	.821	.813	.795	.821	.804	

Counts Unlimited
PO Box 1178
Corona, CA 92878
(951) 268-6268

City of Perris
N/S: Indian Avenue
E/W: Harley Knox Boulevard
Weather: Clear

File Name : PERINHAPM
Site Code : 05115699
Start Date : 12/16/2015
Page No : 1

Groups Printed- Large 2 Axle Vehicles

	Indian Street Southbound					Harley Knox Boulevard Westbound					Indian Avenue Northbound					Harley Knox Boulevard Eastbound							
Start Time	Left	Thru	Right	RTOR	App. Total	Left	Thru	Right	RTOR	App. Total	Left	Thru	Right	RTOR	App. Total	Left	Thru	Right	RTOR	App. Total	Exclu. Total	Inclu. Total	Int. Total
04:00 PM	0	0	1	0	1	2	0	0	0	2	1	0	0	0	1	2	2	0	0	4	0	8	8
04:15 PM	0	0	1	0	1	1	0	0	0	1	0	1	0	0	1	2	2	1	1	5	1	8	9
04:30 PM	0	0	0	0	0	0	3	0	0	3	0	0	0	0	0	1	0	0	0	1	0	4	4
04:45 PM	0	0	2	0	2	0	1	0	0	1	1	0	0	0	1	0	0	0	0	0	0	4	4
Total	0	0	4	0	4	3	4	0	0	7	2	1	0	0	3	5	4	1	1	10	1	24	25
05:00 PM	0	0	0	0	0	0	0	0	0	0	0	0	0	0	0	1	1	0	0	2	0	2	2
05:15 PM	0	0	0	0	0	0	0	0	0	0	1	1	0	0	2	0	0	0	0	0	0	2	2
05:30 PM	0	1	0	0	1	0	2	0	0	2	0	0	0	0	0	1	0	0	0	1	0	4	4
05:45 PM	0	0	0	0	0	0	0	0	0	0	1	0	0	0	1	1	1	0	0	2	0	3	3
Total	0	1	0	0	1	0	2	0	0	2	2	1	0	0	3	3	2	0	0	5	0	11	11
Grand Total	0	1	4	0	5	3	6	0	0	9	4	2	0	0	6	8	6	1	1	15	1	35	36
Apprch %	0	20	80			33.3	66.7	0			66.7	33.3	0			53.3	40	6.7					
Total %	0	2.9	11.4		14.3	8.6	17.1	0		25.7	11.4	5.7	0		17.1	22.9	17.1	2.9		42.9	2.8	97.2	

	Indian Street Southbound				Harley Knox Boulevard Westbound				Indian Avenue Northbound				Harley Knox Boulevard Eastbound				
Start Time	Left	Thru	Right	App. Total	Left	Thru	Right	App. Total	Left	Thru	Right	App. Total	Left	Thru	Right	App. Total	Int. Total
Peak Hour Analysis From 04:15 PM to 05:00 PM - Peak 1 of 1																	
Peak Hour for Entire Intersection Begins at 04:15 PM																	
04:15 PM	0	0	1	1	**1**	0	0	1	0	**1**	0	**1**	**2**	**2**	**1**	**5**	**8**
04:30 PM	0	0	0	0	0	**3**	0	**3**	0	0	0	0	1	0	0	1	4
04:45 PM	0	0	**2**	**2**	0	1	0	1	**1**	0	0	1	0	0	0	0	4
05:00 PM	0	0	0	0	0	0	0	0	0	0	0	0	1	1	0	2	2
Total Volume	0	0	3	3	1	4	0	5	1	1	0	2	4	3	1	8	18
% App. Total	0	0	100		20	80	0		50	50	0		50	37.5	12.5		
PHF	.000	.000	.375	.375	.250	.333	.000	.417	.250	.250	.000	.500	.500	.375	.250	.400	.563

Counts Unlimited
PO Box 1178
Corona, CA 92878
(951) 268-6268

City of Perris
N/S: Indian Avenue
E/W: Harley Knox Boulevard
Weather: Clear

File Name : PERINHAPM
Site Code : 05115699
Start Date : 12/16/2015
Page No : 2

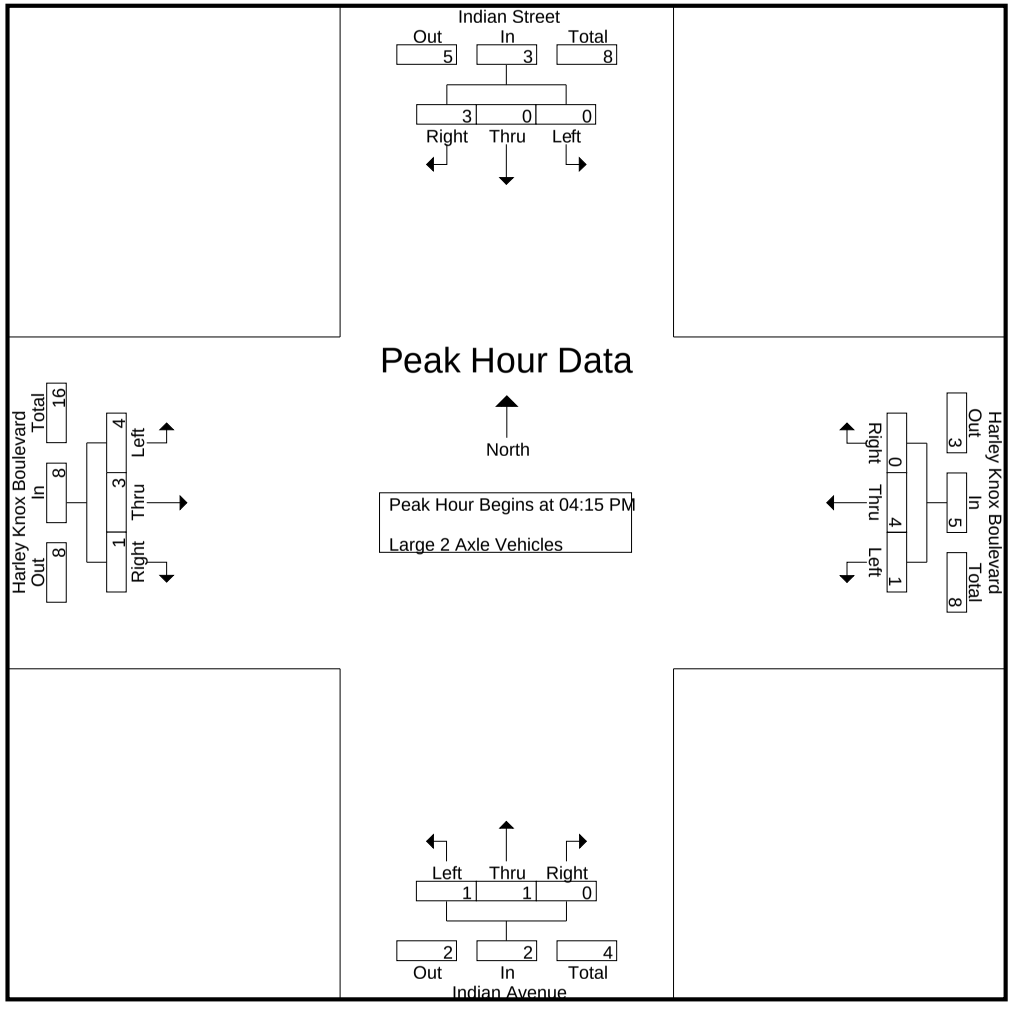

Counts Unlimited
PO Box 1178
Corona, CA 92878
(951) 268-6268

City of Perris
N/S: Indian Avenue
E/W: Harley Knox Boulevard
Weather: Clear

File Name : PERINHAPM
Site Code : 05115699
Start Date : 12/16/2015
Page No : 3

	Indian Street Southbound				Harley Knox Boulevard Westbound				Indian Avenue Northbound				Harley Knox Boulevard Eastbound				
Start Time	Left	Thru	Right	App. Total	Left	Thru	Right	App. Total	Left	Thru	Right	App. Total	Left	Thru	Right	App. Total	Int. Total
Peak Hour Analysis From 04:15 PM to 05:00 PM - Peak 1 of 1																	
Peak Hour for Each Approach Begins at:																	
	04:15 PM				04:15 PM				04:15 PM				04:15 PM				
+0 mins.	0	0	1	1	**1**	0	0	1	0	**1**	0	**1**	**2**	**2**	**1**	**5**	
+15 mins.	0	0	0	0	0	**3**	0	**3**	0	0	0	0	1	0	0	1	
+30 mins.	0	0	**2**	**2**	0	1	0	1	**1**	0	0	1	0	0	0	0	
+45 mins.	0	0	0	0	0	0	0	0	0	0	0	0	1	1	0	2	
Total Volume	0	0	3	3	1	4	0	5	1	1	0	2	4	3	1	8	
% App. Total	0	0	100		20	80	0		50	50	0		50	37.5	12.5		
PHF	.000	.000	.375	.375	.250	.333	.000	.417	.250	.250	.000	.500	.500	.375	.250	.400	

Counts Unlimited
PO Box 1178
Corona, CA 92878
(951) 268-6268

City of Perris
N/S: Indian Avenue
E/W: Harley Knox Boulevard
Weather: Clear

File Name : PERINHAPM
Site Code : 05115699
Start Date : 12/16/2015
Page No : 1

Groups Printed- 3 Axle Vehicles

	Indian Street Southbound					Harley Knox Boulevard Westbound					Indian Avenue Northbound					Harley Knox Boulevard Eastbound							
Start Time	Left	Thru	Right	RTOR	App. Total	Left	Thru	Right	RTOR	App. Total	Left	Thru	Right	RTOR	App. Total	Left	Thru	Right	RTOR	App. Total	Exclu. Total	Inclu. Total	Int. Total
04:00 PM	0	0	1	0	1	0	1	2	0	3	1	2	0	0	3	4	0	2	0	6	0	13	13
04:15 PM	0	0	1	0	1	2	1	0	0	3	1	1	1	0	3	3	1	0	0	4	0	11	11
04:30 PM	0	0	1	0	1	0	1	0	0	1	0	2	0	0	2	10	3	0	0	13	0	17	17
04:45 PM	0	0	1	0	1	1	1	0	0	2	0	3	0	0	3	6	0	0	0	6	0	12	12
Total	0	0	4	0	4	3	4	2	0	9	2	8	1	0	11	23	4	2	0	29	0	53	53
05:00 PM	0	0	0	0	0	0	1	0	0	1	0	1	0	0	1	6	1	2	1	9	1	11	12
05:15 PM	0	0	0	0	0	0	1	0	0	1	0	2	0	0	2	1	1	1	0	3	0	6	6
05:30 PM	0	0	1	0	1	0	5	0	0	5	0	4	0	0	4	3	0	1	0	4	0	14	14
05:45 PM	0	1	1	0	2	0	0	0	0	0	0	3	0	0	3	6	0	0	0	6	0	11	11
Total	0	1	2	0	3	0	7	0	0	7	0	10	0	0	10	16	2	4	1	22	1	42	43
Grand Total	0	1	6	0	7	3	11	2	0	16	2	18	1	0	21	39	6	6	1	51	1	95	96
Apprch %	0	14.3	85.7			18.8	68.8	12.5			9.5	85.7	4.8			76.5	11.8	11.8					
Total %	0	1.1	6.3		7.4	3.2	11.6	2.1		16.8	2.1	18.9	1.1		22.1	41.1	6.3	6.3		53.7	1	99	

	Indian Street Southbound				Harley Knox Boulevard Westbound				Indian Avenue Northbound				Harley Knox Boulevard Eastbound				
Start Time	Left	Thru	Right	App. Total	Left	Thru	Right	App. Total	Left	Thru	Right	App. Total	Left	Thru	Right	App. Total	Int. Total
Peak Hour Analysis From 04:15 PM to 05:00 PM - Peak 1 of 1																	
Peak Hour for Entire Intersection Begins at 04:15 PM																	
04:15 PM	0	0	**1**	**1**	**2**	**1**	0	**3**	**1**	1	**1**	**3**	3	1	0	4	11
04:30 PM	0	0	1	1	0	1	0	1	0	2	0	2	**10**	**3**	0	**13**	**17**
04:45 PM	0	0	1	1	1	1	0	2	0	**3**	0	3	6	0	0	6	12
05:00 PM	0	0	0	0	0	1	0	1	0	1	0	1	6	1	**2**	9	11
Total Volume	0	0	3	3	3	4	0	7	1	7	1	9	25	5	2	32	51
% App. Total	0	0	100		42.9	57.1	0		11.1	77.8	11.1		78.1	15.6	6.2		
PHF	.000	.000	.750	.750	.375	1.00	.000	.583	.250	.583	.250	.750	.625	.417	.250	.615	.750

Counts Unlimited
PO Box 1178
Corona, CA 92878
(951) 268-6268

City of Perris
N/S: Indian Avenue
E/W: Harley Knox Boulevard
Weather: Clear

File Name : PERINHAPM
Site Code : 05115699
Start Date : 12/16/2015
Page No : 2

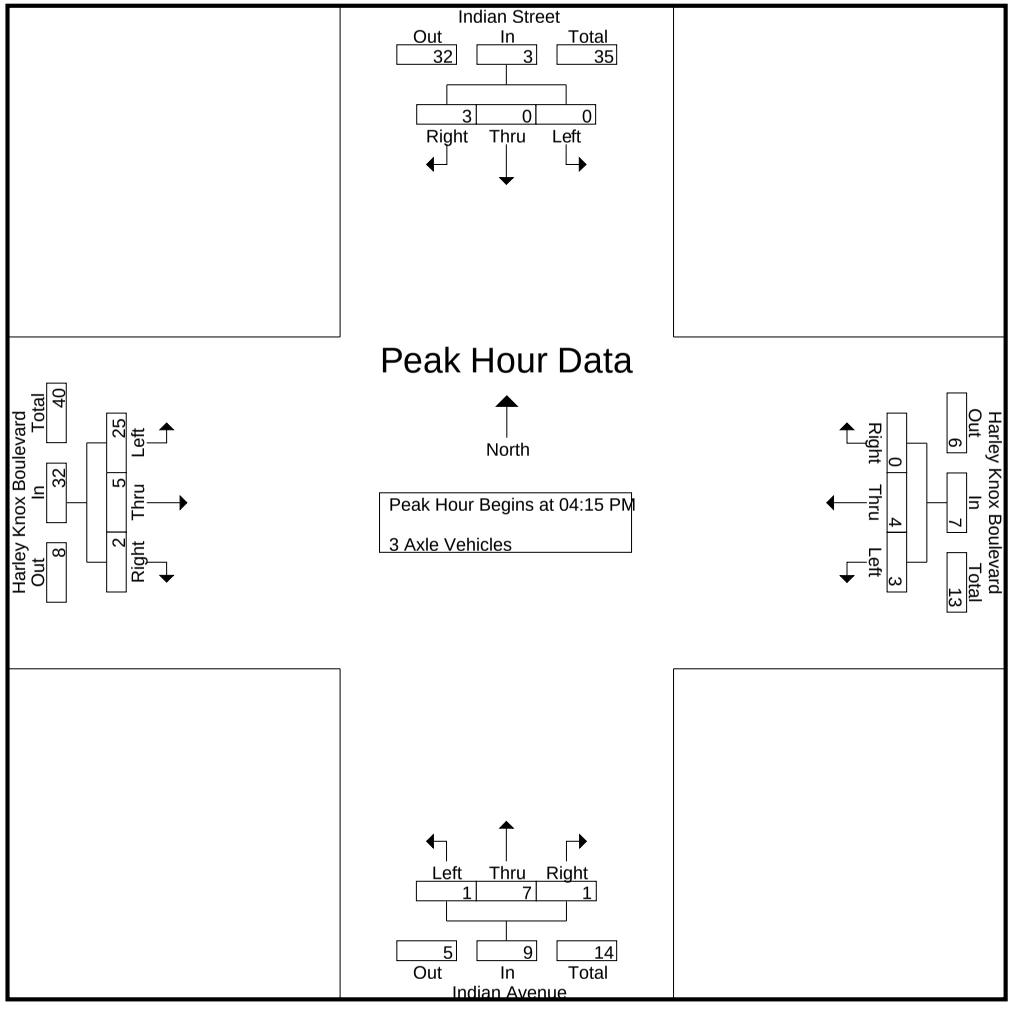

Counts Unlimited
PO Box 1178
Corona, CA 92878
(951) 268-6268

City of Perris
N/S: Indian Avenue
E/W: Harley Knox Boulevard
Weather: Clear

File Name : PERINHAPM
Site Code : 05115699
Start Date : 12/16/2015
Page No : 3

	Indian Street Southbound				Harley Knox Boulevard Westbound				Indian Avenue Northbound				Harley Knox Boulevard Eastbound				
Start Time	Left	Thru	Right	App. Total	Left	Thru	Right	App. Total	Left	Thru	Right	App. Total	Left	Thru	Right	App. Total	Int. Total
Peak Hour Analysis From 04:15 PM to 05:00 PM - Peak 1 of 1																	
Peak Hour for Each Approach Begins at:																	
	04:15 PM				04:15 PM				04:15 PM				04:15 PM				
+0 mins.	0	0	**1**	**1**	**2**	**1**	0	**3**	**1**	1	**1**	**3**	3	1	0	4	
+15 mins.	0	0	1	1	0	1	0	1	0	2	0	2	**10**	**3**	0	**13**	
+30 mins.	0	0	1	1	1	1	0	2	0	**3**	0	3	6	0	0	6	
+45 mins.	0	0	0	0	0	1	0	1	0	1	0	1	6	1	**2**	9	
Total Volume	0	0	3	3	3	4	0	7	1	7	1	9	25	5	2	32	
% App. Total	0	0	100		42.9	57.1	0		11.1	77.8	11.1		78.1	15.6	6.2		
PHF	.000	.000	.750	.750	.375	1.000	.000	.583	.250	.583	.250	.750	.625	.417	.250	.615	

Counts Unlimited
PO Box 1178
Corona, CA 92878
(951) 268-6268

City of Perris
N/S: Indian Avenue
E/W: Harley Knox Boulevard
Weather: Clear

File Name : PERINHAPM
Site Code : 05115699
Start Date : 12/16/2015
Page No : 1

Groups Printed- 4+ Axle Trucks

	Indian Street Southbound					Harley Knox Boulevard Westbound					Indian Avenue Northbound					Harley Knox Boulevard Eastbound							
Start Time	Left	Thru	Right	RTOR	App. Total	Left	Thru	Right	RTOR	App. Total	Left	Thru	Right	RTOR	App. Total	Left	Thru	Right	RTOR	App. Total	Exclu. Total	Inclu. Total	Int. Total
04:00 PM	0	2	7	1	9	0	1	0	0	1	1	2	0	0	3	1	1	1	0	3	1	16	17
04:15 PM	0	1	6	1	7	0	7	0	0	7	1	1	0	0	2	1	4	0	0	5	1	21	22
04:30 PM	0	0	6	2	6	0	4	0	0	4	1	1	0	0	2	7	2	3	1	12	3	24	27
04:45 PM	0	0	6	1	6	0	5	0	0	5	1	0	0	0	1	4	3	4	0	11	1	23	24
Total	0	3	25	5	28	0	17	0	0	17	4	4	0	0	8	13	10	8	1	31	6	84	90
05:00 PM	0	0	3	2	3	0	1	2	0	3	0	2	0	0	2	1	2	0	0	3	2	11	13
05:15 PM	1	2	5	0	8	0	2	0	0	2	1	0	0	0	1	4	1	1	0	6	0	17	17
05:30 PM	0	0	4	0	4	0	0	0	0	0	4	0	0	0	4	1	2	0	0	3	0	11	11
05:45 PM	0	1	4	0	5	0	4	0	0	4	2	1	0	0	3	0	1	0	0	1	0	13	13
Total	1	3	16	2	20	0	7	2	0	9	7	3	0	0	10	6	6	1	0	13	2	52	54
Grand Total	1	6	41	7	48	0	24	2	0	26	11	7	0	0	18	19	16	9	1	44	8	136	144
Apprch %	2.1	12.5	85.4			0	92.3	7.7			61.1	38.9	0			43.2	36.4	20.5					
Total %	0.7	4.4	30.1		35.3	0	17.6	1.5		19.1	8.1	5.1	0		13.2	14	11.8	6.6		32.4	5.6	94.4	

	Indian Street Southbound				Harley Knox Boulevard Westbound				Indian Avenue Northbound				Harley Knox Boulevard Eastbound				
Start Time	Left	Thru	Right	App. Total	Left	Thru	Right	App. Total	Left	Thru	Right	App. Total	Left	Thru	Right	App. Total	Int. Total
Peak Hour Analysis From 04:15 PM to 05:00 PM - Peak 1 of 1																	
Peak Hour for Entire Intersection Begins at 04:15 PM																	
04:15 PM	0	**1**	**6**	**7**	0	**7**	0	**7**	**1**	1	0	**2**	1	**4**	0	5	21
04:30 PM	0	0	6	6	0	4	0	4	1	1	0	2	**7**	2	3	**12**	**24**
04:45 PM	0	0	6	6	0	5	0	5	1	0	0	1	4	3	**4**	11	23
05:00 PM	0	0	3	3	0	1	**2**	3	0	**2**	0	2	1	2	0	3	11
Total Volume	0	1	21	22	0	17	2	19	3	4	0	7	13	11	7	31	79
% App. Total	0	4.5	95.5		0	89.5	10.5		42.9	57.1	0		41.9	35.5	22.6		
PHF	.000	.250	.875	.786	.000	.607	.250	.679	.750	.500	.000	.875	.464	.688	.438	.646	.823

Counts Unlimited
PO Box 1178
Corona, CA 92878
(951) 268-6268

City of Perris
N/S: Indian Avenue
E/W: Harley Knox Boulevard
Weather: Clear

File Name : PERINHAPM
Site Code : 05115699
Start Date : 12/16/2015
Page No : 2

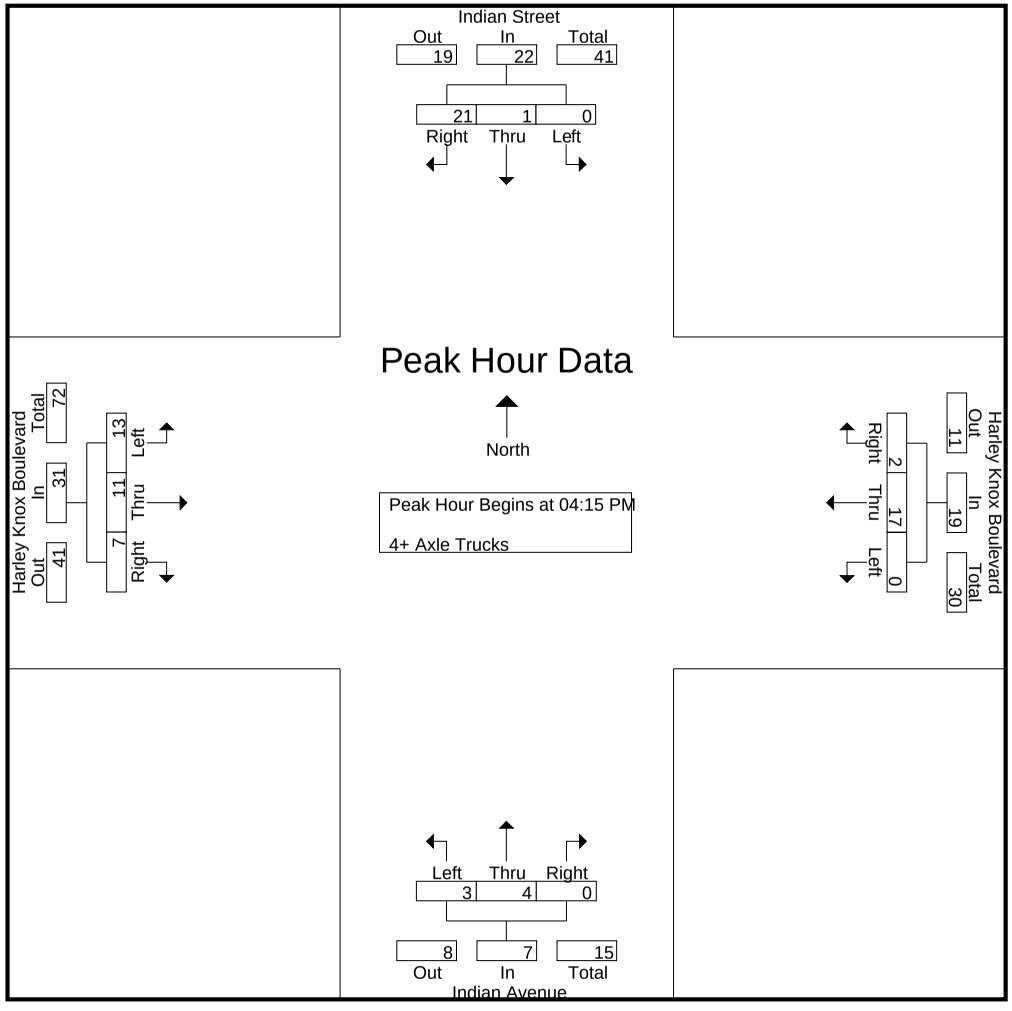

Counts Unlimited
PO Box 1178
Corona, CA 92878
(951) 268-6268

City of Perris
N/S: Indian Avenue
E/W: Harley Knox Boulevard
Weather: Clear

File Name : PERINHAPM
Site Code : 05115699
Start Date : 12/16/2015
Page No : 3

	Indian Street Southbound				Harley Knox Boulevard Westbound				Indian Avenue Northbound				Harley Knox Boulevard Eastbound				
Start Time	Left	Thru	Right	App. Total	Left	Thru	Right	App. Total	Left	Thru	Right	App. Total	Left	Thru	Right	App. Total	Int. Total
Peak Hour Analysis From 04:15 PM to 05:00 PM - Peak 1 of 1																	
Peak Hour for Each Approach Begins at:																	
	04:15 PM				04:15 PM				04:15 PM				04:15 PM				
+0 mins.	0	**1**	**6**	**7**	0	**7**	0	**7**	**1**	1	0	**2**	1	**4**	0	5	
+15 mins.	0	0	6	6	0	4	0	4	1	1	0	2	**7**	2	3	**12**	
+30 mins.	0	0	6	6	0	5	0	5	1	0	0	1	4	3	**4**	11	
+45 mins.	0	0	3	3	0	1	**2**	3	0	**2**	0	2	1	2	0	3	
Total Volume	0	1	21	22	0	17	2	19	3	4	0	7	13	11	7	31	
% App. Total	0	4.5	95.5		0	89.5	10.5		42.9	57.1	0		41.9	35.5	22.6		
PHF	.000	.250	.875	.786	.000	.607	.250	.679	.750	.500	.000	.875	.464	.688	.438	.646	

Location: Perris
N/S: Indian Avenue
E/W: Harley Knox Boulevard

Site Code: 051-15699
Date: 12/16/2015
Weather: Clear

PEDESTRIANS

	North Leg Indian Street	East Leg Harley Knox Boulevard	South Leg Indian Avenue	West Leg Harley Knox Boulevard	TOTAL
7:00 AM	0	0	0	0	0
7:15 AM	0	0	0	0	0
7:30 AM	0	0	0	0	0
7:45 AM	0	0	0	0	0
8:00 AM	0	0	0	0	0
8:15 AM	0	0	0	0	0
8:30 AM	0	0	0	0	0
8:45 AM	0	0	0	0	0
TOTAL VOLUMES:	0	0	0	0	0

	North Leg Indian Street	East Leg Harley Knox Boulevard	South Leg Indian Avenue	West Leg Harley Knox Boulevard	TOTAL
4:00 PM	0	0	0	0	0
4:15 PM	0	0	0	0	0
4:30 PM	0	0	0	0	0
4:45 PM	0	1	0	0	1
5:00 PM	0	0	0	0	0
5:15 PM	0	0	0	0	0
5:30 PM	0	0	0	0	0
5:45 PM	0	0	0	0	0
TOTAL VOLUMES:	0	1	0	0	1

1

Counts Unlimited, Inc.
PO Box 1178
Corona, CA 92878
951-268-6268

Location: Perris
N/S: Indian Avenue
E/W: Harley Knox Boulevard

Site Code: 051-15699
Date: 12/16/2015
Weather: Clear

BICYCLES

	North Leg Indian Street	East Leg Harley Knox Boulevard	South Leg Indian Avenue	West Leg Harley Knox Boulevard	TOTAL
7:00 AM	0	0	0	1	1
7:15 AM	0	0	0	1 0	0
7:30 AM	0	0	0	0	0
7:45 AM	0	0	0	0	0
8:00 AM	0	0	0	0	0
8:15 AM	0	0	0	0	0
8:30 AM	0	0	0	0	0
8:45 AM	0	0	0	0	0
TOTAL VOLUMES:	0	0	0	1	1

	North Leg Indian Street	East Leg Harley Knox Boulevard	South Leg Indian Avenue	West Leg Harley Knox Boulevard	TOTAL
4:00 PM	0	0	0	0	0
4:15 PM	0	0	0	0	0
4:30 PM	0	0	0	0	0
4:45 PM	0	0	0	0	0
5:00 PM	0	0	0	0	0
5:15 PM	0	0	0	0	0
5:30 PM	0	0	0	0	0
5:45 PM	0	0	0	0	0
TOTAL VOLUMES:	0	0	0	0	0

Counts Unlimited, Inc.
PO Box 1178
Corona, CA 92878
951-268-6268

Counts Unlimited, Inc.

PO Box 1178
Corona, CA 92878
Phone: (951) 268-6268
email.counts@countsunlimited.com

City of Moreno Valley
Indian Street
S/ Grove View Road
24 Hour Directional Classification Count

MRVINSGV
Site Code: 051-15699

Northbound

Start Time	Bikes	Cars & Trailers	2 Axle Long	Buses	2 Axle 6 Tire	3 Axle Single	4 Axle Single	<5 Axl Double	5 Axle Double	>6 Axl Double	<6 Axl Multi	6 Axle Multi	>6 Axl Multi	Total
12/16/15	0	12	5	0	2	4	0	1	12	0	**1**	0	0	37
01:00	2	8	5	0	1	2	0	3	19	0	0	0	0	40
02:00	3	17	1	1	2	0	0	8	**20**	0	0	0	0	52
03:00	3	57	14	7	5	1	0	6	16	0	0	0	0	109
04:00	5	154	51	2	13	2	0	2	8	0	0	0	0	237
05:00	13	**635**	**111**	6	14	**9**	0	5	6	0	0	0	0	**799**
06:00	10	492	84	13	24	4	0	5	16	0	0	**1**	0	649
07:00	11	157	78	6	**29**	6	0	7	8	0	0	0	0	302
08:00	**27**	62	48	10	26	8	1	4	6	0	0	0	0	192
09:00	21	58	32	10	23	7	14	6	9	0	0	0	0	180
10:00	16	63	29	**15**	28	8	**16**	**9**	12	0	0	0	0	196
11:00	17	72	35	14	24	9	10	7	14	0	1	0	0	203
12 PM	**14**	89	31	9	**23**	7	6	**7**	**16**	0	0	1	0	203
13:00	10	129	47	11	22	10	7	4	16	0	0	0	0	256
14:00	13	126	40	11	12	8	9	3	14	0	0	**2**	0	238
15:00	13	142	41	12	23	9	6	4	13	0	**1**	0	0	264
16:00	10	273	**75**	9	15	8	**18**	3	7	0	0	0	**1**	**419**
17:00	7	**298**	64	7	12	**11**	11	4	3	0	0	0	0	417
18:00	8	235	54	**13**	7	7	8	4	11	0	0	0	0	347
19:00	1	55	17	2	4	2	0	6	16	0	0	0	0	103
20:00	2	35	6	4	9	0	0	2	8	0	0	0	0	66
21:00	0	43	11	2	3	3	0	0	16	0	0	0	1	79
22:00	1	84	19	1	5	1	0	2	10	0	0	0	0	123
23:00	2	21	7	2	3	2	0	4	15	0	0	0	0	56
Total	209	3317	905	167	329	128	106	106	291	0	3	4	2	5567
Percent	3.8%	59.6%	16.3%	3.0%	5.9%	2.3%	1.9%	1.9%	5.2%	0.0%	0.1%	0.1%	0.0%	
AM Peak	08:00	05:00	05:00	10:00	07:00	05:00	10:00	10:00	02:00		00:00	06:00		05:00
Vol.	27	635	111	15	29	9	16	9	20		1	1		799
PM Peak	12:00	17:00	16:00	18:00	12:00	17:00	16:00	12:00	12:00		15:00	14:00	16:00	16:00
Vol.	14	298	75	13	23	11	18	7	16		1	2	1	419
Grand Total	209	3317	905	167	329	128	106	106	291	0	3	4	2	5567
Percent	3.8%	59.6%	16.3%	3.0%	5.9%	2.3%	1.9%	1.9%	5.2%	0.0%	0.1%	0.1%	0.0%	

Counts Unlimited, Inc.

PO Box 1178
Corona, CA 92878
Phone: (951) 268-6268
email.counts@countsunlimited.com

City of Moreno Valley
Indian Street
S/ Grove View Road
24 Hour Directional Classification Count

MRVINSGV
Site Code: 051-15699

Southbound

Start Time	Bikes	Cars & Trailers	2 Axle Long	Buses	2 Axle 6 Tire	3 Axle Single	4 Axle Single	<5 Axl Double	5 Axle Double	>6 Axl Double	<6 Axl Multi	6 Axle Multi	>6 Axl Multi	Total
12/16/15	5	53	7	0	2	8	0	3	6	0	**1**	0	0	85
01:00	3	29	4	1	1	7	0	0	12	0	0	1	0	58
02:00	6	17	3	1	4	7	0	1	10	0	1	**3**	0	53
03:00	9	192	28	0	2	14	0	1	11	0	0	0	0	257
04:00	8	163	23	5	2	11	0	1	7	0	1	1	0	222
05:00	5	158	25	0	4	9	0	3	5	0	0	0	0	209
06:00	9	**458**	**56**	3	7	10	0	2	8	0	0	1	0	**554**
07:00	9	114	25	1	10	13	0	**11**	7	0	0	0	0	190
08:00	8	75	17	**6**	**17**	16	0	1	14	0	0	0	0	154
09:00	**15**	85	22	1	13	26	0	6	12	0	0	0	0	180
10:00	12	73	25	3	11	**27**	0	4	7	0	0	0	0	162
11:00	9	83	27	4	13	20	**1**	10	**15**	0	0	0	0	182
12 PM	12	122	25	5	13	**34**	0	4	17	0	0	0	0	232
13:00	10	241	66	3	**21**	20	0	**12**	16	0	0	0	0	389
14:00	8	169	33	**9**	11	22	0	10	22	0	0	0	0	284
15:00	10	184	48	2	7	14	0	3	10	0	0	0	0	278
16:00	**17**	378	63	3	14	15	0	1	9	0	0	0	0	500
17:00	13	375	**75**	0	10	10	0	1	9	0	0	0	0	493
18:00	10	**562**	66	0	14	13	0	3	16	0	0	**1**	0	**685**
19:00	4	79	18	1	8	6	0	2	**23**	0	0	0	0	141
20:00	2	37	6	2	4	1	0	9	12	0	0	0	0	73
21:00	6	56	9	0	3	6	0	2	17	0	0	0	0	99
22:00	2	114	22	0	1	4	0	1	13	0	0	0	0	157
23:00	3	49	14	1	4	2	0	1	9	0	**1**	0	**1**	85
Total	195	3866	707	51	196	315	1	92	287	0	4	7	1	5722
Percent	3.4%	67.6%	12.4%	0.9%	3.4%	5.5%	0.0%	1.6%	5.0%	0.0%	0.1%	0.1%	0.0%	
AM Peak	09:00	06:00	06:00	08:00	08:00	10:00	11:00	07:00	11:00		00:00	02:00		06:00
Vol.	15	458	56	6	17	27	1	11	15		1	3		554
PM Peak	16:00	18:00	17:00	14:00	13:00	12:00		13:00	19:00		23:00	18:00	23:00	18:00
Vol.	17	562	75	9	21	34		12	23		1	1	1	685
Grand Total	195	3866	707	51	196	315	1	92	287	0	4	7	1	5722
Percent	3.4%	67.6%	12.4%	0.9%	3.4%	5.5%	0.0%	1.6%	5.0%	0.0%	0.1%	0.1%	0.0%	

Counts Unlimited, Inc.

PO Box 1178
Corona, CA 92878
Phone: (951) 268-6268
email.counts@countsunlimited.com

City of Moreno Valley
Indian Street
S/ Grove View Road
24 Hour Directional Classification Count

MRVINSGV
Site Code: 051-15699

Northbound, Southbound

Start Time	Bikes	Cars & Trailers	2 Axle Long	Buses	2 Axle 6 Tire	3 Axle Single	4 Axle Single	<5 Axl Double	5 Axle Double	>6 Axl Double	<6 Axl Multi	6 Axle Multi	>6 Axl Multi	Total
12/16/15	5	65	12	0	4	12	0	4	18	0	**2**	0	0	122
01:00	5	37	9	1	2	9	0	3	**31**	0	0	1	0	98
02:00	9	34	4	2	6	7	0	9	30	0	1	**3**	0	105
03:00	12	249	42	7	7	15	0	7	27	0	0	0	0	366
04:00	13	317	74	7	15	13	0	3	15	0	1	1	0	459
05:00	18	793	136	6	18	18	0	8	11	0	0	0	0	1008
06:00	19	**950**	**140**	16	31	14	0	7	24	0	0	2	0	**1203**
07:00	20	271	103	7	39	19	0	**18**	15	0	0	0	0	492
08:00	35	137	65	16	**43**	24	1	5	20	0	0	0	0	346
09:00	**36**	143	54	11	36	33	14	12	21	0	0	0	0	360
10:00	28	136	54	**18**	39	**35**	**16**	13	19	0	0	0	0	358
11:00	26	155	62	18	37	29	11	17	29	0	1	0	0	385
12 PM	26	211	56	14	36	**41**	6	11	33	0	0	1	0	435
13:00	20	370	113	14	**43**	30	7	**16**	32	0	0	0	0	645
14:00	21	295	73	**20**	23	30	9	13	36	0	0	**2**	0	522
15:00	23	326	89	14	30	23	6	7	23	0	**1**	0	0	542
16:00	**27**	651	138	12	29	23	**18**	4	16	0	0	0	**1**	919
17:00	20	673	**139**	7	22	21	11	5	12	0	0	0	0	910
18:00	18	**797**	120	13	21	20	8	7	27	0	0	1	0	**1032**
19:00	5	134	35	3	12	8	0	8	**39**	0	0	0	0	244
20:00	4	72	12	6	13	1	0	11	20	0	0	0	0	139
21:00	6	99	20	2	6	9	0	2	33	0	0	0	1	178
22:00	3	198	41	1	6	5	0	3	23	0	0	0	0	280
23:00	5	70	21	3	7	4	0	5	24	0	1	0	1	141
Total	404	7183	1612	218	525	443	107	198	578	0	7	11	3	11289
Percent	3.6%	63.6%	14.3%	1.9%	4.7%	3.9%	0.9%	1.8%	5.1%	0.0%	0.1%	0.1%	0.0%	
AM Peak	09:00	06:00	06:00	10:00	08:00	10:00	10:00	07:00	01:00		00:00	02:00		06:00
Vol.	36	950	140	18	43	35	16	18	31		2	3		1203
PM Peak	16:00	18:00	17:00	14:00	13:00	12:00	16:00	13:00	19:00		15:00	14:00	16:00	18:00
Vol.	27	797	139	20	43	41	18	16	39		1	2	1	1032
Grand Total	404	7183	1612	218	525	443	107	198	578	0	7	11	3	11289
Percent	3.6%	63.6%	14.3%	1.9%	4.7%	3.9%	0.9%	1.8%	5.1%	0.0%	0.1%	0.1%	0.0%	

Counts Unlimited, Inc.

PO Box 1178
Corona, CA 92878
Phone: (951) 268-6268
email.counts@countsunlimited.com

City of Moreno Valley
Harley Knox Boulevard
W/ Indian Street
24 Hour Directional Classification Count

MRVHKWIN
Site Code: 051-15699

Eastbound

Start Time	Bikes	Cars & Trailers	2 Axle Long	Buses	2 Axle 6 Tire	3 Axle Single	4 Axle Single	<5 Axl Double	5 Axle Double	>6 Axl Double	<6 Axl Multi	6 Axle Multi	>6 Axl Multi	Total
12/16/15	4	41	5	0	3	5	0	6	17	0	2	0	0	83
01:00	7	23	3	0	3	4	0	1	23	0	0	0	0	64
02:00	3	29	4	2	3	3	0	8	24	0	0	0	0	76
03:00	4	92	15	1	9	6	0	9	19	0	0	0	0	155
04:00	7	228	58	0	16	6	0	1	10	0	0	0	0	326
05:00	14	**613**	**104**	4	22	17	0	4	6	0	0	**1**	0	**785**
06:00	**15**	443	103	5	38	14	0	3	16	0	0	1	0	638
07:00	5	339	81	8	**39**	10	0	11	19	0	3	0	0	515
08:00	11	158	58	5	25	13	0	11	15	0	2	0	0	298
09:00	10	103	35	7	26	17	**13**	9	27	0	0	0	0	247
10:00	8	103	47	**13**	32	26	13	16	24	0	**4**	0	**1**	287
11:00	10	123	48	13	27	**34**	5	**22**	**33**	0	4	0	0	319
12 PM	7	244	76	15	**37**	17	5	**22**	**38**	**2**	2	2	0	467
13:00	11	262	81	**18**	31	**24**	7	13	38	0	0	0	0	485
14:00	7	182	58	14	31	22	10	6	30	0	**3**	**3**	**1**	367
15:00	9	270	74	8	32	19	6	5	27	0	0	2	0	452
16:00	12	**397**	**107**	5	33	9	**18**	8	18	1	1	0	0	**609**
17:00	7	397	92	1	28	16	9	3	10	0	0	0	0	563
18:00	12	339	80	2	21	15	9	4	7	0	0	0	0	489
19:00	**16**	169	36	3	13	22	0	6	20	0	0	0	0	285
20:00	10	121	30	2	12	10	0	4	9	0	1	0	0	199
21:00	7	102	15	2	5	9	0	3	17	0	0	0	0	160
22:00	6	122	20	0	10	11	0	1	14	0	0	0	0	184
23:00	7	54	10	1	2	12	0	6	16	0	0	0	0	108
Total	209	4954	1240	129	498	341	95	182	477	3	22	9	2	8161
Percent	2.6%	60.7%	15.2%	1.6%	6.1%	4.2%	1.2%	2.2%	5.8%	0.0%	0.3%	0.1%	0.0%	
AM Peak	06:00	05:00	05:00	10:00	07:00	11:00	09:00	11:00	11:00		10:00	05:00	10:00	05:00
Vol.	15	613	104	13	39	34	13	22	33		4	1	1	785
PM Peak	19:00	16:00	16:00	13:00	12:00	13:00	16:00	12:00	12:00	12:00	14:00	14:00	14:00	16:00
Vol.	16	397	107	18	37	24	18	22	38	2	3	3	1	609
Grand Total	209	4954	1240	129	498	341	95	182	477	3	22	9	2	8161
Percent	2.6%	60.7%	15.2%	1.6%	6.1%	4.2%	1.2%	2.2%	5.8%	0.0%	0.3%	0.1%	0.0%	

Counts Unlimited, Inc.

PO Box 1178
Corona, CA 92878
Phone: (951) 268-6268
email.counts@countsunlimited.com

City of Moreno Valley
Harley Knox Boulevard
W/ Indian Street
24 Hour Directional Classification Count

MRVHKWIN
Site Code: 051-15699

Westbound

Start Time	Bikes	Cars & Trailers	2 Axle Long	Buses	2 Axle 6 Tire	3 Axle Single	4 Axle Single	<5 Axl Double	5 Axle Double	>6 Axl Double	<6 Axl Multi	6 Axle Multi	>6 Axl Multi	Total
12/16/15	3	56	9	0	13	4	0	13	3	0	1	0	0	102
01:00	2	31	6	1	7	5	0	6	6	0	1	1	0	66
02:00	5	23	4	1	8	2	0	7	3	0	1	**3**	0	57
03:00	**12**	138	30	1	7	13	0	13	2	**1**	0	0	0	217
04:00	3	174	51	7	16	11	0	5	1	0	1	1	0	270
05:00	4	210	59	4	42	12	0	9	4	0	1	0	0	345
06:00	10	**487**	**127**	4	**56**	**43**	0	13	1	0	1	1	**1**	**744**
07:00	11	440	112	7	41	12	0	11	4	1	2	0	0	641
08:00	11	176	52	4	39	16	0	20	6	0	1	0	0	325
09:00	8	126	39	12	30	21	0	24	**12**	0	2	0	0	274
10:00	9	96	50	**15**	34	17	0	21	10	0	**5**	0	0	257
11:00	6	139	56	14	43	16	**1**	**29**	6	1	4	0	0	315
12 PM	6	197	70	14	55	**23**	**2**	35	8	**1**	0	0	0	411
13:00	7	246	94	15	**63**	11	1	31	7	1	**3**	0	0	479
14:00	11	261	84	**17**	53	23	0	**45**	8	0	0	0	0	502
15:00	8	250	**95**	11	40	12	0	27	8	0	0	0	0	451
16:00	**13**	**388**	93	4	47	13	0	24	**9**	0	2	0	0	**593**
17:00	9	315	87	3	40	10	0	10	9	0	1	**1**	0	485
18:00	8	381	85	1	30	11	0	8	4	0	3	1	0	532
19:00	6	119	30	1	12	8	0	25	6	0	0	0	0	207
20:00	4	53	18	3	5	3	0	23	6	0	0	0	0	115
21:00	7	81	15	1	5	6	0	15	9	0	0	0	0	139
22:00	2	98	23	0	10	4	0	10	7	0	0	0	0	154
23:00	5	58	10	1	12	4	0	9	4	0	0	0	**1**	104
Total	170	4543	1299	141	708	300	4	433	143	5	29	8	2	7785
Percent	2.2%	58.4%	16.7%	1.8%	9.1%	3.9%	0.1%	5.6%	1.8%	0.1%	0.4%	0.1%	0.0%	
AM Peak	03:00	06:00	06:00	10:00	06:00	06:00	11:00	11:00	09:00	03:00	10:00	02:00	06:00	06:00
Vol.	12	487	127	15	56	43	1	29	12	1	5	3	1	744
PM Peak	16:00	16:00	15:00	14:00	13:00	12:00	12:00	14:00	16:00	12:00	13:00	17:00	23:00	16:00
Vol.	13	388	95	17	63	23	2	45	9	1	3	1	1	593
Grand Total	170	4543	1299	141	708	300	4	433	143	5	29	8	2	7785
Percent	2.2%	58.4%	16.7%	1.8%	9.1%	3.9%	0.1%	5.6%	1.8%	0.1%	0.4%	0.1%	0.0%	

Counts Unlimited, Inc.

PO Box 1178
Corona, CA 92878
Phone: (951) 268-6268
email.counts@countsunlimited.com

City of Moreno Valley
Harley Knox Boulevard
W/ Indian Street
24 Hour Directional Classification Count

MRVHKWIN
Site Code: 051-15699

Eastbound, Westbound

Start Time	Bikes	Cars & Trailers	2 Axle Long	Buses	2 Axle 6 Tire	3 Axle Single	4 Axle Single	<5 Axl Double	5 Axle Double	>6 Axl Double	<6 Axl Multi	6 Axle Multi	>6 Axl Multi	Total
12/16/15	7	97	14	0	16	9	0	19	20	0	3	0	0	185
01:00	9	54	9	1	10	9	0	7	29	0	1	1	0	130
02:00	8	52	8	3	11	5	0	15	27	0	1	**3**	0	133
03:00	16	230	45	2	16	19	0	22	21	**1**	0	0	0	372
04:00	10	402	109	7	32	17	0	6	11	0	1	1	0	596
05:00	18	823	163	8	64	29	0	13	10	0	1	1	0	1130
06:00	**25**	**930**	**230**	9	**94**	**57**	0	16	17	0	1	2	**1**	**1382**
07:00	16	779	193	15	80	22	0	22	23	1	5	0	0	1156
08:00	22	334	110	9	64	29	0	31	21	0	3	0	0	623
09:00	18	229	74	19	56	38	**13**	33	**39**	0	2	0	0	521
10:00	17	199	97	**28**	66	43	13	37	34	0	**9**	0	1	544
11:00	16	262	104	27	70	50	6	**51**	39	1	8	0	0	634
12 PM	13	441	146	29	92	40	7	**57**	**46**	**3**	2	2	0	878
13:00	18	508	175	**33**	**94**	35	8	44	45	1	**3**	0	0	964
14:00	18	443	142	31	84	**45**	10	51	38	0	3	**3**	**1**	869
15:00	17	520	169	19	72	31	6	32	35	0	0	2	0	903
16:00	**25**	**785**	**200**	9	80	22	**18**	32	27	1	3	0	0	**1202**
17:00	16	712	179	4	68	26	9	13	19	0	1	1	0	1048
18:00	20	720	165	3	51	26	9	12	11	0	3	1	0	1021
19:00	22	288	66	4	25	30	0	31	26	0	0	0	0	492
20:00	14	174	48	5	17	13	0	27	15	0	1	0	0	314
21:00	14	183	30	3	10	15	0	18	26	0	0	0	0	299
22:00	8	220	43	0	20	15	0	11	21	0	0	0	0	338
23:00	12	112	20	2	14	16	0	15	20	0	0	0	1	212
Total	379	9497	2539	270	1206	641	99	615	620	8	51	17	4	15946
Percent	2.4%	59.6%	15.9%	1.7%	7.6%	4.0%	0.6%	3.9%	3.9%	0.1%	0.3%	0.1%	0.0%	
AM Peak	06:00	06:00	06:00	10:00	06:00	06:00	09:00	11:00	09:00	03:00	10:00	02:00	06:00	06:00
Vol.	25	930	230	28	94	57	13	51	39	1	9	3	1	1382
PM Peak	16:00	16:00	16:00	13:00	13:00	14:00	16:00	12:00	12:00	12:00	13:00	14:00	14:00	16:00
Vol.	25	785	200	33	94	45	18	57	46	3	3	3	1	1202
Grand Total	379	9497	2539	270	1206	641	99	615	620	8	51	17	4	15946
Percent	2.4%	59.6%	15.9%	1.7%	7.6%	4.0%	0.6%	3.9%	3.9%	0.1%	0.3%	0.1%	0.0%	

APPENDIX 3.2:

EXISTING (2015) CONDITIONS INTERSECTION OPERATIONS ANALYSIS WORKSHEETS

This Page Intentionally Left Blank

Movement	EBL	EBT	EBR	WBL	WBT	WBR	NBL	NBT	NBR	SBL	SBT	SBR
Lane Configurations												
Traffic Volume (veh/h)	0	557	10	169	206	0	0	0	0	357	3	140
Future Volume (veh/h)	0	557	10	169	206	0	0	0	0	357	3	140
Number	5	2	12	1	6	16				7	4	14
Initial Q (Qb), veh	0	0	0	0	0	0				0	0	0
Ped-Bike Adj(A_pbT)	1.00		1.00	1.00		1.00				1.00		1.00
Parking Bus, Adj	1.00	1.00	1.00	1.00	1.00	1.00				1.00	1.00	1.00
Adj Sat Flow, veh/h/ln	0	1900	1900	1900	1900	0				1900	1900	1900
Adj Flow Rate, veh/h	0	612	8	186	226	0				392	3	89
Adj No. of Lanes	0	2	1	1	2	0				0	1	1
Peak Hour Factor	0.91	0.91	0.91	0.91	0.91	0.91				0.91	0.91	0.91
Percent Heavy Veh, %	0	0	0	0	0	0				0	0	0
Cap, veh/h	0	1862	833	212	2420	0				443	3	398
Arrive On Green	0.00	0.52	0.52	0.23	1.00	0.00				0.25	0.25	0.25
Sat Flow, veh/h	0	3705	1615	1810	3705	0				1796	14	1615
Grp Volume(v), veh/h	0	612	8	186	226	0				395	0	89
Grp Sat Flow(s),veh/h/ln	0	1805	1615	1810	1805	0				1810	0	1615
Q Serve(g_s), s	0.0	11.9	0.3	11.9	0.0	0.0				25.2	0.0	5.3
Cycle Q Clear(g_c), s	0.0	11.9	0.3	11.9	0.0	0.0				25.2	0.0	5.3
Prop In Lane	0.00		1.00	1.00		0.00				0.99		1.00
Lane Grp Cap(c), veh/h	0	1862	833	212	2420	0				446	0	398
V/C Ratio(X)	0.00	0.33	0.01	0.88	0.09	0.00				0.89	0.00	0.22
Avail Cap(c_a), veh/h	0	1862	833	369	2420	0				679	0	606
HCM Platoon Ratio	1.00	1.00	1.00	2.00	2.00	1.00				1.00	1.00	1.00
Upstream Filter(I)	0.00	1.00	1.00	0.98	0.98	0.00				1.00	0.00	1.00
Uniform Delay (d), s/veh	0.0	16.9	14.1	45.1	0.0	0.0				43.6	0.0	36.1
Incr Delay (d2), s/veh	0.0	0.5	0.0	4.8	0.1	0.0				9.1	0.0	0.3
Initial Q Delay(d3),s/veh	0.0	0.0	0.0	0.0	0.0	0.0				0.0	0.0	0.0
%ile BackOfQ(50%),veh/ln	0.0	6.0	0.1	6.2	0.0	0.0				13.7	0.0	2.4
LnGrp Delay(d),s/veh	0.0	17.4	14.2	50.0	0.1	0.0				52.7	0.0	36.3
LnGrp LOS		B	B	D	A					D		D
Approach Vol, veh/h		620			412						484	
Approach Delay, s/veh		17.4			22.6						49.7	
Approach LOS		B			C						D	

Timer	1	2	3	4	5	6	7	8
Assigned Phs	1	2		4		6		
Phs Duration (G+Y+Rc), s	18.5	66.9		34.6		85.4		
Change Period (Y+Rc), s	4.5	5.0		5.0		5.0		
Max Green Setting (Gmax), s	24.5	36.0		45.0		65.0		
Max Q Clear Time (g_c+I1), s	13.9	13.9		27.2		2.0		
Green Ext Time (p_c), s	0.2	3.3		2.3		3.6		

Intersection Summary	
HCM 2010 Ctrl Delay	29.1
HCM 2010 LOS	C

Movement	EBL	EBT	EBR	WBL	WBT	WBR	NBL	NBT	NBR	SBL	SBT	SBR
Lane Configurations												
Traffic Volume (veh/h)	315	599	0	0	362	504	12	4	105	0	0	0
Future Volume (veh/h)	315	599	0	0	362	504	12	4	105	0	0	0
Number	5	2	12	1	6	16	3	8	18			
Initial Q (Qb), veh	0	0	0	0	0	0	0	0	0			
Ped-Bike Adj(A_pbT)	1.00		1.00	1.00		1.00	1.00		1.00			
Parking Bus, Adj	1.00	1.00	1.00	1.00	1.00	1.00	1.00	1.00	1.00			
Adj Sat Flow, veh/h/ln	1900	1900	0	0	1900	1900	1900	1900	1900			
Adj Flow Rate, veh/h	362	689	0	0	416	553	14	5	67			
Adj No. of Lanes	1	2	0	0	2	1	0	1	1			
Peak Hour Factor	0.87	0.87	0.87	0.87	0.87	0.87	0.87	0.87	0.87			
Percent Heavy Veh, %	0	0	0	0	0	0	0	0	0			
Cap, veh/h	384	2798	0	0	1926	862	191	68	229			
Arrive On Green	0.42	1.00	0.00	0.00	0.53	0.53	0.14	0.14	0.14			
Sat Flow, veh/h	1810	3705	0	0	3705	1615	1350	482	1615			
Grp Volume(v), veh/h	362	689	0	0	416	553	19	0	67			
Grp Sat Flow(s),veh/h/ln	1810	1805	0	0	1805	1615	1832	0	1615			
Q Serve(g_s), s	23.0	0.0	0.0	0.0	7.3	29.1	1.1	0.0	4.5			
Cycle Q Clear(g_c), s	23.0	0.0	0.0	0.0	7.3	29.1	1.1	0.0	4.5			
Prop In Lane	1.00		0.00	0.00		1.00	0.74		1.00			
Lane Grp Cap(c), veh/h	384	2798	0	0	1926	862	260	0	229			
V/C Ratio(X)	0.94	0.25	0.00	0.00	0.22	0.64	0.07	0.00	0.29			
Avail Cap(c_a), veh/h	596	2798	0	0	1926	862	260	0	229			
HCM Platoon Ratio	2.00	2.00	1.00	1.00	1.00	1.00	1.00	1.00	1.00			
Upstream Filter(I)	0.94	0.94	0.00	0.00	1.00	1.00	1.00	0.00	1.00			
Uniform Delay (d), s/veh	33.8	0.0	0.0	0.0	14.8	19.8	44.7	0.0	46.1			
Incr Delay (d2), s/veh	13.3	0.2	0.0	0.0	0.3	3.7	0.5	0.0	3.2			
Initial Q Delay(d3),s/veh	0.0	0.0	0.0	0.0	0.0	0.0	0.0	0.0	0.0			
%ile BackOfQ(50%),veh/ln	12.7	0.1	0.0	0.0	3.7	13.8	0.6	0.0	2.2			
LnGrp Delay(d),s/veh	47.1	0.2	0.0	0.0	15.0	23.5	45.2	0.0	49.3			
LnGrp LOS	D	A			B	C	D		D			
Approach Vol, veh/h		1051			969			86				
Approach Delay, s/veh		16.4			19.9			48.4				
Approach LOS		B			B			D				

Timer	1	2	3	4	5	6	7	8
Assigned Phs		2			5	6		8
Phs Duration (G+Y+Rc), s		98.0			29.0	69.0		22.0
Change Period (Y+Rc), s		5.0			3.5	5.0		5.0
Max Green Setting (Gmax), s		93.0			39.5	50.0		17.0
Max Q Clear Time (g_c+I1), s		2.0			25.0	31.1		6.5
Green Ext Time (p_c), s		6.4			0.4	5.6		0.1

Intersection Summary	
HCM 2010 Ctrl Delay	19.3
HCM 2010 LOS	B

Intersection	
Int Delay, s/veh	1.4

Movement	EBL	EBT	WBT	WBR	SBL	SBR
Traffic Vol, veh/h	68	636	798	26	2	68
Future Vol, veh/h	68	636	798	26	2	68
Conflicting Peds, #/hr	0	0	0	0	0	0
Sign Control	Free	Free	Free	Free	Stop	Stop
RT Channelized	-	None	-	None	-	None
Storage Length	-	-	-	0	0	-
Veh in Median Storage, #	-	0	0	-	0	-
Grade, %	-	0	0	-	0	-
Peak Hour Factor	82	82	82	82	82	82
Heavy Vehicles, %	0	0	0	0	0	0
Mvmt Flow	83	776	973	32	2	83

Major/Minor	Major1		Major2		Minor2	
Conflicting Flow All	973	0	-	0	1527	487
Stage 1	-	-	-	-	973	-
Stage 2	-	-	-	-	554	-
Critical Hdwy	4.1	-	-	-	6.8	6.9
Critical Hdwy Stg 1	-	-	-	-	5.8	-
Critical Hdwy Stg 2	-	-	-	-	5.8	-
Follow-up Hdwy	2.2	-	-	-	3.5	3.3
Pot Cap-1 Maneuver	717	-	-	-	*169	532
Stage 1	-	-	-	-	*332	-
Stage 2	-	-	-	-	*780	-
Platoon blocked, %		-	-	-	1	
Mov Cap-1 Maneuver	717	-	-	-	*134	532
Mov Cap-2 Maneuver	-	-	-	-	*134	-
Stage 1	-	-	-	-	*332	-
Stage 2	-	-	-	-	*622	-

Approach	EB	WB	SB
HCM Control Delay, s	1.8	0	13.9
HCM LOS			B

Minor Lane/Major Mvmt	EBL	EBT	WBT	WBR	SBLn1
Capacity (veh/h)	717	-	-	-	490
HCM Lane V/C Ratio	0.116	-	-	-	0.174
HCM Control Delay (s)	10.7	0.9	-	-	13.9
HCM Lane LOS	B	A	-	-	B
HCM 95th %tile Q(veh)	0.4	-	-	-	0.6

Notes

~: Volume exceeds capacity $: Delay exceeds 300s +: Computation Not Defined *: All major volume in platoon

Movement	EBL	EBT	EBR	WBL	WBT	WBR	NBL	NBT	NBR	SBL	SBT	SBR
Lane Configurations												
Traffic Volume (veh/h)	9	553	11	1	708	14	79	2	6	3	4	6
Future Volume (veh/h)	9	553	11	1	708	14	79	2	6	3	4	6
Number	5	2	12	1	6	16	3	8	18	7	4	14
Initial Q (Qb), veh	0	0	0	0	0	0	0	0	0	0	0	0
Ped-Bike Adj(A_pbT)	1.00		1.00	1.00		1.00	1.00		1.00	1.00		1.00
Parking Bus, Adj	1.00	1.00	1.00	1.00	1.00	1.00	1.00	1.00	1.00	1.00	1.00	1.00
Adj Sat Flow, veh/h/ln	1900	1900	1900	1900	1900	1900	1900	1900	1900	1900	1900	1900
Adj Flow Rate, veh/h	11	674	11	1	863	17	96	2	2	4	5	5
Adj No. of Lanes	1	2	1	1	2	1	0	1	0	0	1	1
Peak Hour Factor	0.82	0.82	0.82	0.82	0.82	0.82	0.82	0.82	0.82	0.82	0.82	0.82
Percent Heavy Veh, %	0	0	0	0	0	0	0	0	0	0	0	0
Cap, veh/h	24	1579	707	2	1536	687	617	13	11	329	392	635
Arrive On Green	0.01	0.44	0.44	0.00	0.43	0.43	0.39	0.39	0.39	0.39	0.39	0.39
Sat Flow, veh/h	1810	3610	1615	1810	3610	1615	1370	33	29	690	997	1615
Grp Volume(v), veh/h	11	674	11	1	863	17	100	0	0	9	0	5
Grp Sat Flow(s),veh/h/ln	1810	1805	1615	1810	1805	1615	1431	0	0	1687	0	1615
Q Serve(g_s), s	0.5	11.6	0.3	0.0	16.2	0.6	4.0	0.0	0.0	0.0	0.0	0.2
Cycle Q Clear(g_c), s	0.5	11.6	0.3	0.0	16.2	0.6	4.2	0.0	0.0	0.3	0.0	0.2
Prop In Lane	1.00		1.00	1.00		1.00	0.96		0.02	0.44		1.00
Lane Grp Cap(c), veh/h	24	1579	707	2	1536	687	641	0	0	721	0	635
V/C Ratio(X)	0.46	0.43	0.02	0.40	0.56	0.02	0.16	0.00	0.00	0.01	0.00	0.01
Avail Cap(c_a), veh/h	207	1579	707	107	1536	687	641	0	0	721	0	635
HCM Platoon Ratio	1.00	1.00	1.00	1.00	1.00	1.00	1.00	1.00	1.00	1.00	1.00	1.00
Upstream Filter(I)	1.00	1.00	1.00	1.00	1.00	1.00	1.00	0.00	0.00	1.00	0.00	1.00
Uniform Delay (d), s/veh	44.1	17.5	14.3	44.9	19.5	15.0	17.9	0.0	0.0	16.6	0.0	16.6
Incr Delay (d2), s/veh	4.9	0.8	0.0	34.8	1.5	0.1	0.5	0.0	0.0	0.0	0.0	0.0
Initial Q Delay(d3),s/veh	0.0	0.0	0.0	0.0	0.0	0.0	0.0	0.0	0.0	0.0	0.0	0.0
%ile BackOfQ(50%),veh/ln	0.3	6.0	0.2	0.0	8.3	0.3	1.7	0.0	0.0	0.1	0.0	0.1
LnGrp Delay(d),s/veh	49.0	18.4	14.4	79.7	21.0	15.1	18.4	0.0	0.0	16.7	0.0	16.6
LnGrp LOS	D	B	B	E	C	B	B			B		B
Approach Vol, veh/h		696			881			100			14	
Approach Delay, s/veh		18.8			21.0			18.4			16.7	
Approach LOS		B			C			B			B	

Timer	1	2	3	4	5	6	7	8
Assigned Phs	1	2		4	5	6		8
Phs Duration (G+Y+Rc), s	4.3	45.2		40.5	5.4	44.1		40.5
Change Period (Y+Rc), s	* 4.2	5.8		5.1	* 4.2	5.8		5.1
Max Green Setting (Gmax), s	* 5.3	34.2		35.4	* 10	29.2		35.4
Max Q Clear Time (g_c+I1), s	2.0	13.6		2.3	2.5	18.2		6.2
Green Ext Time (p_c), s	0.0	6.9		0.4	0.0	5.1		0.3

Intersection Summary	
HCM 2010 Ctrl Delay	19.9
HCM 2010 LOS	B

Notes

Intersection	
Int Delay, s/veh	0

Movement	EBT	EBR	WBL	WBT	NBL	NBR
Traffic Vol, veh/h	553	2	0	721	0	3
Future Vol, veh/h	553	2	0	721	0	3
Conflicting Peds, #/hr	0	0	0	0	0	0
Sign Control	Free	Free	Free	Free	Stop	Stop
RT Channelized	-	None	-	None	-	None
Storage Length	-	-	-	-	-	0
Veh in Median Storage, #	0	-	-	0	0	-
Grade, %	0	-	-	0	0	-
Peak Hour Factor	86	86	86	86	86	86
Heavy Vehicles, %	0	0	0	0	0	0
Mvmt Flow	643	2	0	838	0	3

Major/Minor	Major1		Major2		Minor1	
Conflicting Flow All	0	0	645	0	979	323
Stage 1	-	-	-	-	644	-
Stage 2	-	-	-	-	335	-
Critical Hdwy	-	-	5.3	-	5.7	7.1
Critical Hdwy Stg 1	-	-	-	-	6.6	-
Critical Hdwy Stg 2	-	-	-	-	6	-
Follow-up Hdwy	-	-	3.1	-	3.8	3.9
Pot Cap-1 Maneuver	-	-	948	-	*323	*800
Stage 1	-	-	-	-	*762	-
Stage 2	-	-	-	-	*780	-
Platoon blocked, %	-	-	1	-		1
Mov Cap-1 Maneuver	-	-	948	-	*323	*800
Mov Cap-2 Maneuver	-	-	-	-	*323	-
Stage 1	-	-	-	-	*762	-
Stage 2	-	-	-	-	*780	-

Approach	EB	WB	NB
HCM Control Delay, s	0	0	9.5
HCM LOS			A

Minor Lane/Major Mvmt	NBLn1	EBT	EBR	WBL	WBT
Capacity (veh/h)	800	-	-	948	-
HCM Lane V/C Ratio	0.004	-	-	-	-
HCM Control Delay (s)	9.5	-	-	0	-
HCM Lane LOS	A	-	-	A	-
HCM 95th %tile Q(veh)	0	-	-	0	-

Notes			
~: Volume exceeds capacity	$: Delay exceeds 300s	+: Computation Not Defined	*: All major volume in platoon

Movement	EBL	EBT	EBR	WBL	WBT	WBR	NBL	NBT	NBR	SBL	SBT	SBR
Lane Configurations												
Traffic Volume (veh/h)	1	22	107	50	15	5	71	214	33	6	63	4
Future Volume (veh/h)	1	22	107	50	15	5	71	214	33	6	63	4
Number	7	4	14	3	8	18	5	2	12	1	6	16
Initial Q (Qb), veh	0	0	0	0	0	0	0	0	0	0	0	0
Ped-Bike Adj(A_pbT)	1.00		1.00	1.00		1.00	1.00		1.00	1.00		0.98
Parking Bus, Adj	1.00	1.00	1.00	1.00	1.00	1.00	1.00	1.00	1.00	1.00	1.00	1.00
Adj Sat Flow, veh/h/ln	1900	1900	1900	1900	1900	1900	1900	1900	1900	1900	1900	1900
Adj Flow Rate, veh/h	1	26	75	60	18	5	85	255	32	7	75	4
Adj No. of Lanes	1	1	1	1	1	1	1	2	0	1	2	0
Peak Hour Factor	0.84	0.84	0.84	0.84	0.84	0.84	0.84	0.84	0.84	0.84	0.84	0.84
Percent Heavy Veh, %	0	0	0	0	0	0	0	0	0	0	0	0
Cap, veh/h	73	227	291	83	237	201	110	1845	229	16	1808	96
Arrive On Green	0.04	0.12	0.12	0.05	0.12	0.12	0.06	0.57	0.57	0.01	0.52	0.52
Sat Flow, veh/h	1810	1900	1615	1810	1900	1611	1810	3232	401	1810	3484	184
Grp Volume(v), veh/h	1	26	75	60	18	5	85	141	146	7	39	40
Grp Sat Flow(s),veh/h/ln	1810	1900	1615	1810	1900	1611	1810	1805	1829	1810	1805	1863
Q Serve(g_s), s	0.0	1.0	2.3	2.6	0.7	0.2	3.7	2.9	3.0	0.3	0.8	0.9
Cycle Q Clear(g_c), s	0.0	1.0	2.3	2.6	0.7	0.2	3.7	2.9	3.0	0.3	0.8	0.9
Prop In Lane	1.00		1.00	1.00		1.00	1.00		0.22	1.00		0.10
Lane Grp Cap(c), veh/h	73	227	291	83	237	201	110	1030	1044	16	937	967
V/C Ratio(X)	0.01	0.11	0.26	0.72	0.08	0.02	0.77	0.14	0.14	0.43	0.04	0.04
Avail Cap(c_a), veh/h	120	570	582	131	582	493	176	1030	1044	120	937	967
HCM Platoon Ratio	1.00	1.00	1.00	1.00	1.00	1.00	1.00	1.00	1.00	1.00	1.00	1.00
Upstream Filter(I)	1.00	1.00	1.00	1.00	1.00	1.00	1.00	1.00	1.00	1.00	1.00	1.00
Uniform Delay (d), s/veh	36.9	31.5	15.3	37.7	30.9	22.0	37.0	8.0	8.0	39.4	9.5	9.5
Incr Delay (d2), s/veh	0.0	0.1	0.2	4.3	0.0	0.0	4.3	0.3	0.3	6.5	0.1	0.1
Initial Q Delay(d3),s/veh	0.0	0.0	0.0	0.0	0.0	0.0	0.0	0.0	0.0	0.0	0.0	0.0
%ile BackOfQ(50%),veh/ln	0.0	0.5	1.0	1.4	0.4	0.1	2.0	1.5	1.6	0.2	0.4	0.5
LnGrp Delay(d),s/veh	36.9	31.5	15.5	42.0	31.0	22.1	41.4	8.3	8.3	45.9	9.5	9.5
LnGrp LOS	D	C	B	D	C	C	D	A	A	D	A	A
Approach Vol, veh/h		102			83			372			86	
Approach Delay, s/veh		19.8			38.4			15.8			12.5	
Approach LOS		B			D			B			B	

Timer	1	2	3	4	5	6	7	8
Assigned Phs	1	2	3	4	5	6	7	8
Phs Duration (G+Y+Rc), s	4.9	51.9	7.9	15.3	9.1	47.7	7.4	15.8
Change Period (Y+Rc), s	* 4.2	6.2	4.2	* 5.8	* 4.2	6.2	4.2	* 5.8
Max Green Setting (Gmax), s	* 5.3	24.5	5.8	* 24	* 7.8	22.0	5.3	* 25
Max Q Clear Time (g_c+I1), s	2.3	5.0	4.6	4.3	5.7	2.9	2.0	2.7
Green Ext Time (p_c), s	0.0	1.0	0.0	0.1	0.0	1.0	0.0	0.0

Intersection Summary	
HCM 2010 Ctrl Delay	18.9
HCM 2010 LOS	B

Notes

Intersection	
Int Delay, s/veh	0.4

Movement	WBL	WBR	NBT	NBR	SBL	SBT
Traffic Vol, veh/h	15	5	328	30	1	228
Future Vol, veh/h	15	5	328	30	1	228
Conflicting Peds, #/hr	0	0	0	0	0	0
Sign Control	Stop	Stop	Free	Free	Free	Free
RT Channelized	-	None	-	None	-	None
Storage Length	210	0	-	-	120	-
Veh in Median Storage, #	2	-	0	-	-	0
Grade, %	0	-	0	-	-	0
Peak Hour Factor	84	84	84	84	84	84
Heavy Vehicles, %	0	0	0	0	0	0
Mvmt Flow	18	6	390	36	1	271

Major/Minor	Minor1		Major1		Major2	
Conflicting Flow All	682	408	0	0	426	0
Stage 1	408	-	-	-	-	-
Stage 2	274	-	-	-	-	-
Critical Hdwy	6.4	6.2	-	-	4.1	-
Critical Hdwy Stg 1	5.4	-	-	-	-	-
Critical Hdwy Stg 2	5.4	-	-	-	-	-
Follow-up Hdwy	3.5	3.3	-	-	2.2	-
Pot Cap-1 Maneuver	432	648	-	-	1144	-
Stage 1	676	-	-	-	-	-
Stage 2	824	-	-	-	-	-
Platoon blocked, %	1		-	-		-
Mov Cap-1 Maneuver	431	648	-	-	1144	-
Mov Cap-2 Maneuver	531	-	-	-	-	-
Stage 1	676	-	-	-	-	-
Stage 2	823	-	-	-	-	-

Approach	WB	NB	SB
HCM Control Delay, s	11.6	0	0
HCM LOS	B		

Minor Lane/Major Mvmt	NBT	NBR	WBLn1	WBLn2	SBL	SBT
Capacity (veh/h)	-	-	531	648	1144	-
HCM Lane V/C Ratio	-	-	0.034	0.009	0.001	-
HCM Control Delay (s)	-	-	12	10.6	8.2	-
HCM Lane LOS	-	-	B	B	A	-
HCM 95th %tile Q(veh)	-	-	0.1	0	0	-

Movement	EBL	EBT	EBR	WBL	WBT	WBR	NBL	NBT	NBR	SBL	SBT	SBR
Lane Configurations												
Traffic Volume (veh/h)	216	301	45	15	446	20	64	148	16	5	61	174
Future Volume (veh/h)	216	301	45	15	446	20	64	148	16	5	61	174
Number	5	2	12	1	6	16	3	8	18	7	4	14
Initial Q (Qb), veh	0	0	0	0	0	0	0	0	0	0	0	0
Ped-Bike Adj(A_pbT)	1.00		1.00	1.00		0.98	1.00		1.00	1.00		1.00
Parking Bus, Adj	1.00	1.00	1.00	1.00	1.00	1.00	1.00	1.00	1.00	1.00	1.00	1.00
Adj Sat Flow, veh/h/ln	1900	1900	1900	1900	1900	1900	1900	1900	1900	1900	1900	1900
Adj Flow Rate, veh/h	235	327	41	16	485	15	70	161	3	5	66	157
Adj No. of Lanes	1	3	1	1	3	0	2	2	1	1	2	0
Peak Hour Factor	0.92	0.92	0.92	0.92	0.92	0.92	0.92	0.92	0.92	0.92	0.92	0.92
Percent Heavy Veh, %	0	0	0	0	0	0	0	0	0	0	0	0
Cap, veh/h	1321	5530	1722	32	1746	54	148	1429	639	12	614	549
Arrive On Green	0.73	1.00	1.00	0.02	0.34	0.34	0.04	0.40	0.40	0.01	0.34	0.34
Sat Flow, veh/h	1810	5187	1615	1810	5167	159	3510	3610	1615	1810	1805	1615
Grp Volume(v), veh/h	235	327	41	16	324	176	70	161	3	5	66	157
Grp Sat Flow(s),veh/h/ln	1810	1729	1615	1810	1729	1868	1755	1805	1615	1810	1805	1615
Q Serve(g_s), s	4.0	0.0	0.0	0.9	6.8	6.9	1.9	2.8	0.1	0.3	2.5	7.1
Cycle Q Clear(g_c), s	4.0	0.0	0.0	0.9	6.8	6.9	1.9	2.8	0.1	0.3	2.5	7.1
Prop In Lane	1.00		1.00	1.00		0.09	1.00		1.00	1.00		1.00
Lane Grp Cap(c), veh/h	1321	5530	1722	32	1169	631	148	1429	639	12	614	549
V/C Ratio(X)	0.18	0.06	0.02	0.49	0.28	0.28	0.47	0.11	0.00	0.43	0.11	0.29
Avail Cap(c_a), veh/h	1321	5530	1722	90	1169	631	176	1429	639	90	614	549
HCM Platoon Ratio	1.00	1.00	1.00	1.00	1.00	1.00	1.00	1.00	1.00	1.00	1.00	1.00
Upstream Filter(I)	1.00	1.00	1.00	1.00	1.00	1.00	1.00	1.00	1.00	1.00	1.00	1.00
Uniform Delay (d), s/veh	4.2	0.0	0.0	48.7	24.2	24.2	46.8	19.1	18.3	49.5	22.6	24.1
Incr Delay (d2), s/veh	0.0	0.0	0.0	4.2	0.6	1.1	0.9	0.2	0.0	8.8	0.4	1.3
Initial Q Delay(d3),s/veh	0.0	0.0	0.0	0.0	0.0	0.0	0.0	0.0	0.0	0.0	0.0	0.0
%ile BackOfQ(50%),veh/ln	2.0	0.0	0.0	0.5	3.3	3.7	1.0	1.4	0.1	0.2	1.3	3.3
LnGrp Delay(d),s/veh	4.2	0.0	0.0	52.9	24.8	25.3	47.7	19.3	18.3	58.3	23.0	25.4
LnGrp LOS	A	A	A	D	C	C	D	B	B	E	C	C
Approach Vol, veh/h		603			516			234			228	
Approach Delay, s/veh		1.7			25.8			27.7			25.4	
Approach LOS		A			C			C			C	

Timer	1	2	3	4	5	6	7	8
Assigned Phs	1	2	3	4	5	6	7	8
Phs Duration (G+Y+Rc), s	6.0	113.7	9.6	40.2	80.1	39.6	4.8	45.0
Change Period (Y+Rc), s	* 4.2	5.8	5.4	* 6.2	5.8	* 5.8	* 4.2	5.4
Max Green Setting (Gmax), s	* 5	35.6	5.0	* 34	6.8	* 34	* 5	34.8
Max Q Clear Time (g_c+I1), s	2.9	2.0	3.9	9.1	6.0	8.9	2.3	4.8
Green Ext Time (p_c), s	0.0	1.6	0.0	0.7	0.1	1.8	0.0	0.7

Intersection Summary	
HCM 2010 Ctrl Delay	16.8
HCM 2010 LOS	B

Notes

Movement	EBL	EBT	EBR	WBL	WBT	WBR	NBL	NBT	NBR	SBL	SBT	SBR
Lane Configurations												
Traffic Volume (veh/h)	0	385	33	184	134	0	0	0	0	369	3	182
Future Volume (veh/h)	0	385	33	184	134	0	0	0	0	369	3	182
Number	5	2	12	1	6	16				7	4	14
Initial Q (Qb), veh	0	0	0	0	0	0				0	0	0
Ped-Bike Adj(A_pbT)	1.00		1.00	1.00		1.00				1.00		1.00
Parking Bus, Adj	1.00	1.00	1.00	1.00	1.00	1.00				1.00	1.00	1.00
Adj Sat Flow, veh/h/ln	0	1900	1900	1900	1900	0				1900	1900	1900
Adj Flow Rate, veh/h	0	438	28	209	152	0				419	3	134
Adj No. of Lanes	0	2	1	1	2	0				0	1	1
Peak Hour Factor	0.88	0.88	0.88	0.88	0.88	0.88				0.88	0.88	0.88
Percent Heavy Veh, %	0	0	0	0	0	0				0	0	0
Cap, veh/h	0	1753	784	236	2359	0				473	3	425
Arrive On Green	0.00	0.49	0.49	0.22	1.00	0.00				0.26	0.26	0.26
Sat Flow, veh/h	0	3705	1615	1810	3705	0				1797	13	1615
Grp Volume(v), veh/h	0	438	28	209	152	0				422	0	134
Grp Sat Flow(s),veh/h/ln	0	1805	1615	1810	1805	0				1810	0	1615
Q Serve(g_s), s	0.0	8.5	1.1	13.4	0.0	0.0				26.9	0.0	8.0
Cycle Q Clear(g_c), s	0.0	8.5	1.1	13.4	0.0	0.0				26.9	0.0	8.0
Prop In Lane	0.00		1.00	1.00		0.00				0.99		1.00
Lane Grp Cap(c), veh/h	0	1753	784	236	2359	0				477	0	425
V/C Ratio(X)	0.00	0.25	0.04	0.89	0.06	0.00				0.89	0.00	0.32
Avail Cap(c_a), veh/h	0	1753	784	430	2359	0				724	0	646
HCM Platoon Ratio	1.00	1.00	1.00	1.67	1.67	1.00				1.00	1.00	1.00
Upstream Filter(I)	0.00	1.00	1.00	0.99	0.99	0.00				1.00	0.00	1.00
Uniform Delay (d), s/veh	0.0	18.1	16.2	46.1	0.0	0.0				42.5	0.0	35.5
Incr Delay (d2), s/veh	0.0	0.3	0.1	4.4	0.1	0.0				8.7	0.0	0.4
Initial Q Delay(d3),s/veh	0.0	0.0	0.0	0.0	0.0	0.0				0.0	0.0	0.0
%ile BackOfQ(50%),veh/ln	0.0	4.3	0.5	7.0	0.0	0.0				14.6	0.0	3.6
LnGrp Delay(d),s/veh	0.0	18.4	16.2	50.4	0.1	0.0				51.1	0.0	35.9
LnGrp LOS		B	B	D	A					D		D
Approach Vol, veh/h		466			361						556	
Approach Delay, s/veh		18.3			29.2						47.5	
Approach LOS		B			C						D	

Timer	1	2	3	4	5	6	7	8
Assigned Phs	1	2		4		6		
Phs Duration (G+Y+Rc), s	20.1	63.3		36.6		83.4		
Change Period (Y+Rc), s	4.5	5.0		5.0		5.0		
Max Green Setting (Gmax), s	28.5	29.0		48.0		62.0		
Max Q Clear Time (g_c+I1), s	15.4	10.5		28.9		2.0		
Green Ext Time (p_c), s	0.2	2.2		2.7		2.4		

Intersection Summary	
HCM 2010 Ctrl Delay	32.9
HCM 2010 LOS	C

Movement	EBL	EBT	EBR	WBL	WBT	WBR	NBL	NBT	NBR	SBL	SBT	SBR
Lane Configurations												
Traffic Volume (veh/h)	228	525	0	0	310	506	8	0	189	0	0	0
Future Volume (veh/h)	228	525	0	0	310	506	8	0	189	0	0	0
Number	5	2	12	1	6	16	3	8	18			
Initial Q (Qb), veh	0	0	0	0	0	0	0	0	0			
Ped-Bike Adj(A_pbT)	1.00		1.00	1.00		0.99	1.00		1.00			
Parking Bus, Adj	1.00	1.00	1.00	1.00	1.00	1.00	1.00	1.00	1.00			
Adj Sat Flow, veh/h/ln	1900	1900	0	0	1900	1900	1900	1900	1900			
Adj Flow Rate, veh/h	271	625	0	0	369	591	10	0	57			
Adj No. of Lanes	1	2	0	0	2	1	0	1	1			
Peak Hour Factor	0.84	0.84	0.84	0.84	0.84	0.84	0.84	0.84	0.84			
Percent Heavy Veh, %	0	0	0	0	0	0	0	0	0			
Cap, veh/h	295	2677	0	0	1983	876	317	0	283			
Arrive On Green	0.33	1.00	0.00	0.00	0.55	0.55	0.17	0.00	0.17			
Sat Flow, veh/h	1810	3705	0	0	3705	1595	1810	0	1615			
Grp Volume(v), veh/h	271	625	0	0	369	591	10	0	57			
Grp Sat Flow(s),veh/h/ln	1810	1805	0	0	1805	1595	1810	0	1615			
Q Serve(g_s), s	17.3	0.0	0.0	0.0	6.2	31.8	0.6	0.0	3.6			
Cycle Q Clear(g_c), s	17.3	0.0	0.0	0.0	6.2	31.8	0.6	0.0	3.6			
Prop In Lane	1.00		0.00	0.00		1.00	1.00		1.00			
Lane Grp Cap(c), veh/h	295	2677	0	0	1983	876	317	0	283			
V/C Ratio(X)	0.92	0.23	0.00	0.00	0.19	0.67	0.03	0.00	0.20			
Avail Cap(c_a), veh/h	490	2677	0	0	1983	876	317	0	283			
HCM Platoon Ratio	2.00	2.00	1.00	1.00	1.00	1.00	1.00	1.00	1.00			
Upstream Filter(I)	0.97	0.97	0.00	0.00	1.00	1.00	1.00	0.00	1.00			
Uniform Delay (d), s/veh	39.6	0.0	0.0	0.0	13.6	19.4	41.1	0.0	42.3			
Incr Delay (d2), s/veh	9.4	0.2	0.0	0.0	0.2	4.1	0.2	0.0	1.6			
Initial Q Delay(d3),s/veh	0.0	0.0	0.0	0.0	0.0	0.0	0.0	0.0	0.0			
%ile BackOfQ(50%),veh/ln	9.3	0.1	0.0	0.0	3.1	15.0	0.3	0.0	1.7			
LnGrp Delay(d),s/veh	49.0	0.2	0.0	0.0	13.8	23.5	41.3	0.0	43.9			
LnGrp LOS	D	A			B	C	D		D			
Approach Vol, veh/h		896			960			67				
Approach Delay, s/veh		15.0			19.8			43.5				
Approach LOS		B			B			D				

Timer	1	2	3	4	5	6	7	8
Assigned Phs		2			5	6		8
Phs Duration (G+Y+Rc), s		94.0			23.1	70.9		26.0
Change Period (Y+Rc), s		5.0			3.5	5.0		5.0
Max Green Setting (Gmax), s		89.0			32.5	53.0		21.0
Max Q Clear Time (g_c+I1), s		2.0			19.3	33.8		5.6
Green Ext Time (p_c), s		5.8			0.3	5.2		0.1

Intersection Summary	
HCM 2010 Ctrl Delay	18.4
HCM 2010 LOS	B

Intersection	
Int Delay, s/veh	1.1

Movement	EBL	EBT	WBT	WBR	SBL	SBR
Traffic Vol, veh/h	20	694	731	6	14	85
Future Vol, veh/h	20	694	731	6	14	85
Conflicting Peds, #/hr	0	0	0	0	0	0
Sign Control	Free	Free	Free	Free	Stop	Stop
RT Channelized	-	None	-	None	-	None
Storage Length	-	-	-	0	0	-
Veh in Median Storage, #	-	0	0	-	0	-
Grade, %	-	0	0	-	0	-
Peak Hour Factor	88	88	88	88	88	88
Heavy Vehicles, %	0	0	0	0	0	0
Mvmt Flow	23	789	831	7	16	97

Major/Minor	Major1		Major2		Minor2	
Conflicting Flow All	831	0	-	0	1271	415
Stage 1	-	-	-	-	831	-
Stage 2	-	-	-	-	440	-
Critical Hdwy	4.1	-	-	-	6.8	6.9
Critical Hdwy Stg 1	-	-	-	-	5.8	-
Critical Hdwy Stg 2	-	-	-	-	5.8	-
Follow-up Hdwy	2.2	-	-	-	3.5	3.3
Pot Cap-1 Maneuver	810	-	-	-	*299	592
Stage 1	-	-	-	-	*393	-
Stage 2	-	-	-	-	*756	-
Platoon blocked, %		-	-	-	1	
Mov Cap-1 Maneuver	810	-	-	-	*284	592
Mov Cap-2 Maneuver	-	-	-	-	*284	-
Stage 1	-	-	-	-	*393	-
Stage 2	-	-	-	-	*717	-

Approach	EB	WB	SB
HCM Control Delay, s	0.5	0	14
HCM LOS			B

Minor Lane/Major Mvmt	EBL	EBT	WBT	WBR	SBLn1
Capacity (veh/h)	810	-	-	-	513
HCM Lane V/C Ratio	0.028	-	-	-	0.219
HCM Control Delay (s)	9.6	0.2	-	-	14
HCM Lane LOS	A	A	-	-	B
HCM 95th %tile Q(veh)	0.1	-	-	-	0.8

Notes			
~: Volume exceeds capacity	$: Delay exceeds 300s	+: Computation Not Defined	*: All major volume in platoon

Movement	EBL	EBT	EBR	WBL	WBT	WBR	NBL	NBT	NBR	SBL	SBT	SBR
Lane Configurations												
Traffic Volume (veh/h)	3	651	24	2	665	3	33	4	6	6	2	13
Future Volume (veh/h)	3	651	24	2	665	3	33	4	6	6	2	13
Number	5	2	12	1	6	16	3	8	18	7	4	14
Initial Q (Qb), veh	0	0	0	0	0	0	0	0	0	0	0	0
Ped-Bike Adj(A_pbT)	1.00		1.00	1.00		1.00	1.00		1.00	1.00		1.00
Parking Bus, Adj	1.00	1.00	1.00	1.00	1.00	1.00	1.00	1.00	1.00	1.00	1.00	1.00
Adj Sat Flow, veh/h/ln	1900	1900	1900	1900	1900	1900	1900	1900	1900	1900	1900	1900
Adj Flow Rate, veh/h	4	766	28	2	782	3	39	5	2	7	2	8
Adj No. of Lanes	1	2	1	1	2	1	0	1	0	0	1	1
Peak Hour Factor	0.85	0.85	0.85	0.85	0.85	0.85	0.85	0.85	0.85	0.85	0.85	0.85
Percent Heavy Veh, %	0	0	0	0	0	0	0	0	0	0	0	0
Cap, veh/h	10	1472	659	5	1463	655	588	73	26	555	150	665
Arrive On Green	0.01	0.41	0.41	0.00	0.41	0.41	0.41	0.41	0.41	0.41	0.41	0.41
Sat Flow, veh/h	1810	3610	1615	1810	3610	1615	1237	177	64	1165	364	1615
Grp Volume(v), veh/h	4	766	28	2	782	3	46	0	0	9	0	8
Grp Sat Flow(s),veh/h/ln	1810	1805	1615	1810	1805	1615	1479	0	0	1529	0	1615
Q Serve(g_s), s	0.2	13.6	0.9	0.1	14.0	0.1	1.1	0.0	0.0	0.0	0.0	0.2
Cycle Q Clear(g_c), s	0.2	13.6	0.9	0.1	14.0	0.1	1.5	0.0	0.0	0.2	0.0	0.2
Prop In Lane	1.00		1.00	1.00		1.00	0.85		0.04	0.78		1.00
Lane Grp Cap(c), veh/h	10	1472	659	5	1463	655	687	0	0	705	0	665
V/C Ratio(X)	0.42	0.52	0.04	0.41	0.53	0.00	0.07	0.00	0.00	0.01	0.00	0.01
Avail Cap(c_a), veh/h	106	1472	659	106	1463	655	687	0	0	705	0	665
HCM Platoon Ratio	1.00	1.00	1.00	1.00	1.00	1.00	1.00	1.00	1.00	1.00	1.00	1.00
Upstream Filter(I)	1.00	1.00	1.00	1.00	1.00	1.00	1.00	0.00	0.00	1.00	0.00	1.00
Uniform Delay (d), s/veh	42.1	18.9	15.2	42.3	19.2	15.1	15.1	0.0	0.0	14.8	0.0	14.8
Incr Delay (d2), s/veh	10.4	1.3	0.1	18.9	1.4	0.0	0.2	0.0	0.0	0.0	0.0	0.0
Initial Q Delay(d3),s/veh	0.0	0.0	0.0	0.0	0.0	0.0	0.0	0.0	0.0	0.0	0.0	0.0
%ile BackOfQ(50%),veh/ln	0.1	7.0	0.4	0.1	7.2	0.0	0.7	0.0	0.0	0.1	0.0	0.1
LnGrp Delay(d),s/veh	52.5	20.2	15.3	61.2	20.6	15.1	15.3	0.0	0.0	14.8	0.0	14.8
LnGrp LOS	D	C	B	E	C	B	B			B		B
Approach Vol, veh/h		798			787			46			17	
Approach Delay, s/veh		20.2			20.7			15.3			14.8	
Approach LOS		C			C			B			B	

Timer	1	2	3	4	5	6	7	8
Assigned Phs	1	2		4	5	6		8
Phs Duration (G+Y+Rc), s	4.4	40.5		40.1	4.7	40.2		40.1
Change Period (Y+Rc), s	* 4.2	5.8		5.1	* 4.2	5.8		5.1
Max Green Setting (Gmax), s	* 5	29.9		35.0	* 5	29.9		35.0
Max Q Clear Time (g_c+I1), s	2.1	15.6		2.2	2.2	16.0		3.5
Green Ext Time (p_c), s	0.0	6.0		0.2	0.0	5.9		0.2

Intersection Summary	
HCM 2010 Ctrl Delay	20.2
HCM 2010 LOS	C

Notes

Intersection	
Int Delay, s/veh	0

Movement	EBT	EBR	WBL	WBT	NBL	NBR
Traffic Vol, veh/h	646	2	0	654	0	3
Future Vol, veh/h	646	2	0	654	0	3
Conflicting Peds, #/hr	0	0	0	0	0	0
Sign Control	Free	Free	Free	Free	Stop	Stop
RT Channelized	-	None	-	None	-	None
Storage Length	-	-	-	-	-	0
Veh in Median Storage, #	0	-	-	0	0	-
Grade, %	0	-	-	0	0	-
Peak Hour Factor	87	87	87	87	87	87
Heavy Vehicles, %	0	0	0	0	0	0
Mvmt Flow	743	2	0	752	0	3

Major/Minor	Major1		Major2		Minor1	
Conflicting Flow All	0	0	745	0	1045	372
Stage 1	-	-	-	-	744	-
Stage 2	-	-	-	-	301	-
Critical Hdwy	-	-	5.3	-	5.7	7.1
Critical Hdwy Stg 1	-	-	-	-	6.6	-
Critical Hdwy Stg 2	-	-	-	-	6	-
Follow-up Hdwy	-	-	3.1	-	3.8	3.9
Pot Cap-1 Maneuver	-	-	867	-	*299	*793
Stage 1	-	-	-	-	*683	-
Stage 2	-	-	-	-	*795	-
Platoon blocked, %	-	-	1	-		1
Mov Cap-1 Maneuver	-	-	867	-	*299	*793
Mov Cap-2 Maneuver	-	-	-	-	*299	-
Stage 1	-	-	-	-	*683	-
Stage 2	-	-	-	-	*795	-

Approach	EB	WB	NB
HCM Control Delay, s	0	0	9.6
HCM LOS			A

Minor Lane/Major Mvmt	NBLn1	EBT	EBR	WBL	WBT
Capacity (veh/h)	793	-	-	867	-
HCM Lane V/C Ratio	0.004	-	-	-	-
HCM Control Delay (s)	9.6	-	-	0	-
HCM Lane LOS	A	-	-	A	-
HCM 95th %tile Q(veh)	0	-	-	0	-

Notes

~: Volume exceeds capacity $: Delay exceeds 300s +: Computation Not Defined *: All major volume in platoon

Movement	EBL	EBT	EBR	WBL	WBT	WBR	NBL	NBT	NBR	SBL	SBT	SBR
Lane Configurations												
Traffic Volume (veh/h)	17	80	250	94	24	33	91	276	51	64	222	56
Future Volume (veh/h)	17	80	250	94	24	33	91	276	51	64	222	56
Number	7	4	14	3	8	18	5	2	12	1	6	16
Initial Q (Qb), veh	0	0	0	0	0	0	0	0	0	0	0	0
Ped-Bike Adj(A_pbT)	1.00		1.00	1.00		0.96	1.00		0.99	1.00		1.00
Parking Bus, Adj	1.00	1.00	1.00	1.00	1.00	1.00	1.00	1.00	1.00	1.00	1.00	1.00
Adj Sat Flow, veh/h/ln	1900	1900	1900	1900	1900	1900	1900	1900	1900	1900	1900	1900
Adj Flow Rate, veh/h	22	105	159	124	32	10	120	363	33	84	292	42
Adj No. of Lanes	1	1	1	1	1	1	1	2	0	1	2	0
Peak Hour Factor	0.76	0.76	0.76	0.76	0.76	0.76	0.76	0.76	0.76	0.76	0.76	0.76
Percent Heavy Veh, %	0	0	0	0	0	0	0	0	0	0	0	0
Cap, veh/h	44	349	581	154	464	378	319	1393	126	108	873	124
Arrive On Green	0.02	0.18	0.18	0.09	0.24	0.24	0.18	0.42	0.42	0.06	0.28	0.28
Sat Flow, veh/h	1810	1900	1611	1810	1900	1546	1810	3345	302	1810	3173	452
Grp Volume(v), veh/h	22	105	159	124	32	10	120	195	201	84	165	169
Grp Sat Flow(s),veh/h/ln	1810	1900	1611	1810	1900	1546	1810	1805	1842	1810	1805	1819
Q Serve(g_s), s	1.0	3.8	1.2	5.4	1.0	0.4	4.7	5.7	5.7	3.7	5.8	5.9
Cycle Q Clear(g_c), s	1.0	3.8	1.2	5.4	1.0	0.4	4.7	5.7	5.7	3.7	5.8	5.9
Prop In Lane	1.00		1.00	1.00		1.00	1.00		0.16	1.00		0.25
Lane Grp Cap(c), veh/h	44	349	581	154	464	378	319	752	767	108	496	500
V/C Ratio(X)	0.50	0.30	0.27	0.81	0.07	0.03	0.38	0.26	0.26	0.78	0.33	0.34
Avail Cap(c_a), veh/h	120	570	768	154	606	493	319	752	767	143	496	500
HCM Platoon Ratio	1.00	1.00	1.00	1.00	1.00	1.00	1.00	1.00	1.00	1.00	1.00	1.00
Upstream Filter(I)	1.00	1.00	1.00	1.00	1.00	1.00	1.00	1.00	1.00	1.00	1.00	1.00
Uniform Delay (d), s/veh	38.6	28.2	6.4	36.0	23.2	23.0	29.1	15.3	15.3	37.1	23.1	23.2
Incr Delay (d2), s/veh	3.3	0.2	0.1	24.5	0.0	0.0	0.3	0.8	0.8	12.5	1.8	1.8
Initial Q Delay(d3),s/veh	0.0	0.0	0.0	0.0	0.0	0.0	0.0	0.0	0.0	0.0	0.0	0.0
%ile BackOfQ(50%),veh/ln	0.5	2.0	1.3	3.7	0.5	0.2	2.4	3.0	3.1	2.2	3.1	3.2
LnGrp Delay(d),s/veh	41.9	28.4	6.4	60.4	23.3	23.0	29.3	16.1	16.1	49.6	24.9	25.0
LnGrp LOS	D	C	A	E	C	C	C	B	B	D	C	C
Approach Vol, veh/h		286			166			516			418	
Approach Delay, s/veh		17.2			51.0			19.2			29.9	
Approach LOS		B			D			B			C	

Timer	1	2	3	4	5	6	7	8
Assigned Phs	1	2	3	4	5	6	7	8
Phs Duration (G+Y+Rc), s	9.0	39.5	11.0	20.5	20.3	28.2	6.1	25.4
Change Period (Y+Rc), s	* 4.2	6.2	* 4.2	5.8	6.2	* 6.2	* 4.2	5.8
Max Green Setting (Gmax), s	* 6.3	22.5	* 6.8	24.0	6.8	* 22	* 5.3	25.5
Max Q Clear Time (g_c+I1), s	5.7	7.7	7.4	5.8	6.7	7.9	3.0	3.0
Green Ext Time (p_c), s	0.0	1.2	0.0	0.6	0.0	0.8	0.0	0.6

Intersection Summary	
HCM 2010 Ctrl Delay	25.8
HCM 2010 LOS	C

Notes

Intersection	
Int Delay, s/veh	0.9

Movement	WBL	WBR	NBT	NBR	SBL	SBT
Traffic Vol, veh/h	33	13	429	35	15	502
Future Vol, veh/h	33	13	429	35	15	502
Conflicting Peds, #/hr	0	0	0	1	0	0
Sign Control	Stop	Stop	Free	Free	Free	Free
RT Channelized	-	None	-	None	-	None
Storage Length	210	0	-	-	120	-
Veh in Median Storage, #	2	-	0	-	-	0
Grade, %	0	-	0	-	-	0
Peak Hour Factor	77	77	77	77	77	77
Heavy Vehicles, %	0	0	0	0	0	0
Mvmt Flow	43	17	557	45	19	652

Major/Minor	Minor1		Major1		Major2	
Conflicting Flow All	1271	580	0	0	603	0
Stage 1	580	-	-	-	-	-
Stage 2	691	-	-	-	-	-
Critical Hdwy	6.4	6.2	-	-	4.1	-
Critical Hdwy Stg 1	5.4	-	-	-	-	-
Critical Hdwy Stg 2	5.4	-	-	-	-	-
Follow-up Hdwy	3.5	3.3	-	-	2.2	-
Pot Cap-1 Maneuver	143	518	-	-	984	-
Stage 1	564	-	-	-	-	-
Stage 2	517	-	-	-	-	-
Platoon blocked, %	1		-	-		-
Mov Cap-1 Maneuver	140	518	-	-	984	-
Mov Cap-2 Maneuver	307	-	-	-	-	-
Stage 1	564	-	-	-	-	-
Stage 2	507	-	-	-	-	-

Approach	WB	NB	SB
HCM Control Delay, s	16.8	0	0.3
HCM LOS	C		

Minor Lane/Major Mvmt	NBT	NBR	WBLn1	WBLn2	SBL	SBT
Capacity (veh/h)	-	-	307	518	984	-
HCM Lane V/C Ratio	-	-	0.14	0.033	0.02	-
HCM Control Delay (s)	-	-	18.6	12.2	8.7	-
HCM Lane LOS	-	-	C	B	A	-
HCM 95th %tile Q(veh)	-	-	0.5	0.1	0.1	-

Movement	EBL	EBT	EBR	WBL	WBT	WBR	NBL	NBT	NBR	SBL	SBT	SBR
Lane Configurations												
Traffic Volume (veh/h)	316	312	50	14	244	24	39	171	17	23	159	373
Future Volume (veh/h)	316	312	50	14	244	24	39	171	17	23	159	373
Number	5	2	12	1	6	16	3	8	18	7	4	14
Initial Q (Qb), veh	0	0	0	0	0	0	0	0	0	0	0	0
Ped-Bike Adj(A_pbT)	1.00		1.00	1.00		1.00	1.00		1.00	1.00		1.00
Parking Bus, Adj	1.00	1.00	1.00	1.00	1.00	1.00	1.00	1.00	1.00	1.00	1.00	1.00
Adj Sat Flow, veh/h/ln	1900	1900	1900	1900	1900	1900	1900	1900	1900	1900	1900	1900
Adj Flow Rate, veh/h	385	380	52	17	298	18	48	209	11	28	194	372
Adj No. of Lanes	1	3	1	1	3	0	2	2	1	1	2	0
Peak Hour Factor	0.82	0.82	0.82	0.82	0.82	0.82	0.82	0.82	0.82	0.82	0.82	0.82
Percent Heavy Veh, %	0	0	0	0	0	0	0	0	0	0	0	0
Cap, veh/h	1004	4452	1386	33	1538	92	119	1210	541	47	558	499
Arrive On Green	0.55	0.86	0.86	0.02	0.31	0.31	0.03	0.34	0.34	0.03	0.31	0.31
Sat Flow, veh/h	1810	5187	1615	1810	5006	299	3510	3610	1614	1810	1805	1615
Grp Volume(v), veh/h	385	380	52	17	205	111	48	209	11	28	194	372
Grp Sat Flow(s),veh/h/ln	1810	1729	1615	1810	1729	1847	1755	1805	1614	1810	1805	1615
Q Serve(g_s), s	13.2	1.2	1.5	1.0	4.8	4.9	1.5	4.5	0.5	1.7	9.2	22.7
Cycle Q Clear(g_c), s	13.2	1.2	1.5	1.0	4.8	4.9	1.5	4.5	0.5	1.7	9.2	22.7
Prop In Lane	1.00		1.00	1.00		0.16	1.00		1.00	1.00		1.00
Lane Grp Cap(c), veh/h	1004	4452	1386	33	1063	568	119	1210	541	47	558	499
V/C Ratio(X)	0.38	0.09	0.04	0.51	0.19	0.20	0.40	0.17	0.02	0.59	0.35	0.75
Avail Cap(c_a), veh/h	1004	4452	1386	86	1063	568	160	1210	541	92	558	499
HCM Platoon Ratio	1.00	1.00	1.00	1.00	1.00	1.00	1.00	1.00	1.00	1.00	1.00	1.00
Upstream Filter(I)	1.00	1.00	1.00	1.00	1.00	1.00	1.00	1.00	1.00	1.00	1.00	1.00
Uniform Delay (d), s/veh	13.8	1.2	10.1	53.5	28.1	28.1	52.0	25.8	24.5	53.0	29.4	34.1
Incr Delay (d2), s/veh	0.1	0.0	0.1	4.4	0.4	0.8	0.8	0.3	0.1	4.3	1.7	9.7
Initial Q Delay(d3),s/veh	0.0	0.0	0.0	0.0	0.0	0.0	0.0	0.0	0.0	0.0	0.0	0.0
%ile BackOfQ(50%),veh/ln	6.5	0.6	0.7	0.6	2.3	2.6	0.7	2.3	0.2	0.9	4.8	11.5
LnGrp Delay(d),s/veh	13.9	1.2	10.2	57.9	28.5	28.9	52.9	26.1	24.6	57.3	31.1	43.8
LnGrp LOS	B	A	B	E	C	C	D	C	C	E	C	D
Approach Vol, veh/h		817			333			268			594	
Approach Delay, s/veh		7.8			30.1			30.8			40.3	
Approach LOS		A			C			C			D	

Timer	1	2	3	4	5	6	7	8
Assigned Phs	1	2	3	4	5	6	7	8
Phs Duration (G+Y+Rc), s	6.2	100.4	9.1	40.2	67.0	39.6	7.1	42.3
Change Period (Y+Rc), s	* 4.2	5.8	5.4	* 6.2	5.8	* 5.8	* 4.2	5.4
Max Green Setting (Gmax), s	* 5.2	45.4	5.0	* 34	16.8	* 34	* 5.6	34.2
Max Q Clear Time (g_c+I1), s	3.0	3.5	3.5	24.7	15.2	6.9	3.7	6.5
Green Ext Time (p_c), s	0.0	2.1	0.0	1.5	0.2	1.1	0.0	0.9

Intersection Summary	
HCM 2010 Ctrl Delay	24.2
HCM 2010 LOS	C

Notes

APPENDIX 3.3:

EXISTING (2015) CONDITIONS OFF-RAMP QUEUING ANALYSIS WORKSHEETS

This Page Intentionally Left Blank

1: I-215 SB On Ramp/I-215 SB Off Ramp & Harley Knox Blvd./Harley Knox. Blvd.

1/6/2016

Lane Group	EBT	EBR	WBL	WBT	SBT	SBR
Lane Group Flow (vph)	612	11	186	226	395	154
v/c Ratio	0.36	0.01	0.74	0.10	0.81	0.28
Control Delay	23.2	0.0	69.5	9.9	53.9	5.7
Queue Delay	0.0	0.0	0.2	0.0	0.0	0.0
Total Delay	23.3	0.0	69.7	9.9	53.9	5.7
Queue Length 50th (ft)	154	0	154	30	287	0
Queue Length 95th (ft)	255	0	229	66	361	45
Internal Link Dist (ft)	844			267	1109	
Turn Bay Length (ft)		100	80			270
Base Capacity (vph)	1701	792	368	2338	679	701
Starvation Cap Reductn	0	0	15	0	0	0
Spillback Cap Reductn	24	0	0	0	0	0
Storage Cap Reductn	0	0	0	0	0	0
Reduced v/c Ratio	0.36	0.01	0.53	0.10	0.58	0.22

Intersection Summary

Lane Group	EBL	EBT	WBT	WBR	NBT	NBR
Lane Group Flow (vph)	362	689	416	579	19	121
v/c Ratio	0.84	0.25	0.23	0.54	0.07	0.36
Control Delay	46.8	2.0	18.0	5.7	45.6	11.4
Queue Delay	0.3	0.3	0.0	0.0	0.0	0.0
Total Delay	47.0	2.3	18.0	5.7	45.6	11.4
Queue Length 50th (ft)	88	10	91	32	13	0
Queue Length 95th (ft)	139	51	137	112	35	49
Internal Link Dist (ft)		267	594		929	
Turn Bay Length (ft)	60			100		265
Base Capacity (vph)	594	2797	1829	1063	259	332
Starvation Cap Reductn	29	1377	0	0	0	0
Spillback Cap Reductn	0	0	0	0	0	0
Storage Cap Reductn	0	0	0	0	0	0
Reduced v/c Ratio	0.64	0.49	0.23	0.54	0.07	0.36

Intersection Summary

Lane Group	EBT	EBR	WBL	WBT	SBT	SBR
Lane Group Flow (vph)	438	38	209	152	422	207
v/c Ratio	0.28	0.05	0.76	0.07	0.81	0.34
Control Delay	24.6	3.5	70.1	10.0	51.9	5.1
Queue Delay	0.0	0.0	0.2	0.0	0.0	0.0
Total Delay	24.6	3.5	70.3	10.0	51.9	5.1
Queue Length 50th (ft)	112	0	175	21	303	0
Queue Length 95th (ft)	185	13	248	42	366	46
Internal Link Dist (ft)	844			267	1109	
Turn Bay Length (ft)		100	80			270
Base Capacity (vph)	1587	743	428	2273	724	770
Starvation Cap Reductn	0	0	25	0	0	0
Spillback Cap Reductn	0	0	0	0	0	0
Storage Cap Reductn	0	0	0	0	0	0
Reduced v/c Ratio	0.28	0.05	0.52	0.07	0.58	0.27

Intersection Summary

Lane Group	EBL	EBT	WBT	WBR	NBT	NBR
Lane Group Flow (vph)	271	625	369	602	10	225
v/c Ratio	0.80	0.23	0.19	0.54	0.03	0.48
Control Delay	49.4	2.1	16.3	3.4	41.5	9.2
Queue Delay	0.2	0.3	0.0	0.0	0.0	0.0
Total Delay	49.5	2.4	16.3	3.4	41.5	9.2
Queue Length 50th (ft)	65	8	76	0	7	0
Queue Length 95th (ft)	99	40	111	38	21	52
Internal Link Dist (ft)		267	594		929	
Turn Bay Length (ft)	60			100		265
Base Capacity (vph)	488	2677	1896	1123	315	468
Starvation Cap Reductn	16	1361	0	0	0	0
Spillback Cap Reductn	0	0	21	0	0	0
Storage Cap Reductn	0	0	0	0	0	0
Reduced v/c Ratio	0.57	0.47	0.20	0.54	0.03	0.48

Intersection Summary

APPENDIX 3.4:

EXISTING (2015) CONDITIONS TRAFFIC SIGNAL WARRANT ANALYSIS WORKSHEETS

This Page Intentionally Left Blank

Figure 4C-4. Warrant 3, Peak Hour (70% Factor)

(COMMUNITY LESS THAN 10,000 POPULATION OR ABOVE 64 km/h OR ABOVE 40 mph ON MAJOR STREET)

Traffic Conditions = **Existing (2015) Conditions - Weekday PM Peak Hour**

Major Street Name = **Harley Knox Boulevard** Total of Both Approaches (VPH) = **1451**
Number of Approach Lanes Major Street = **2**

Minor Street Name = **Western Way** High Volume Approach (VPH) = **99**
Number of Approach Lanes Minor Street = **1**

WARRANTED FOR A SIGNAL

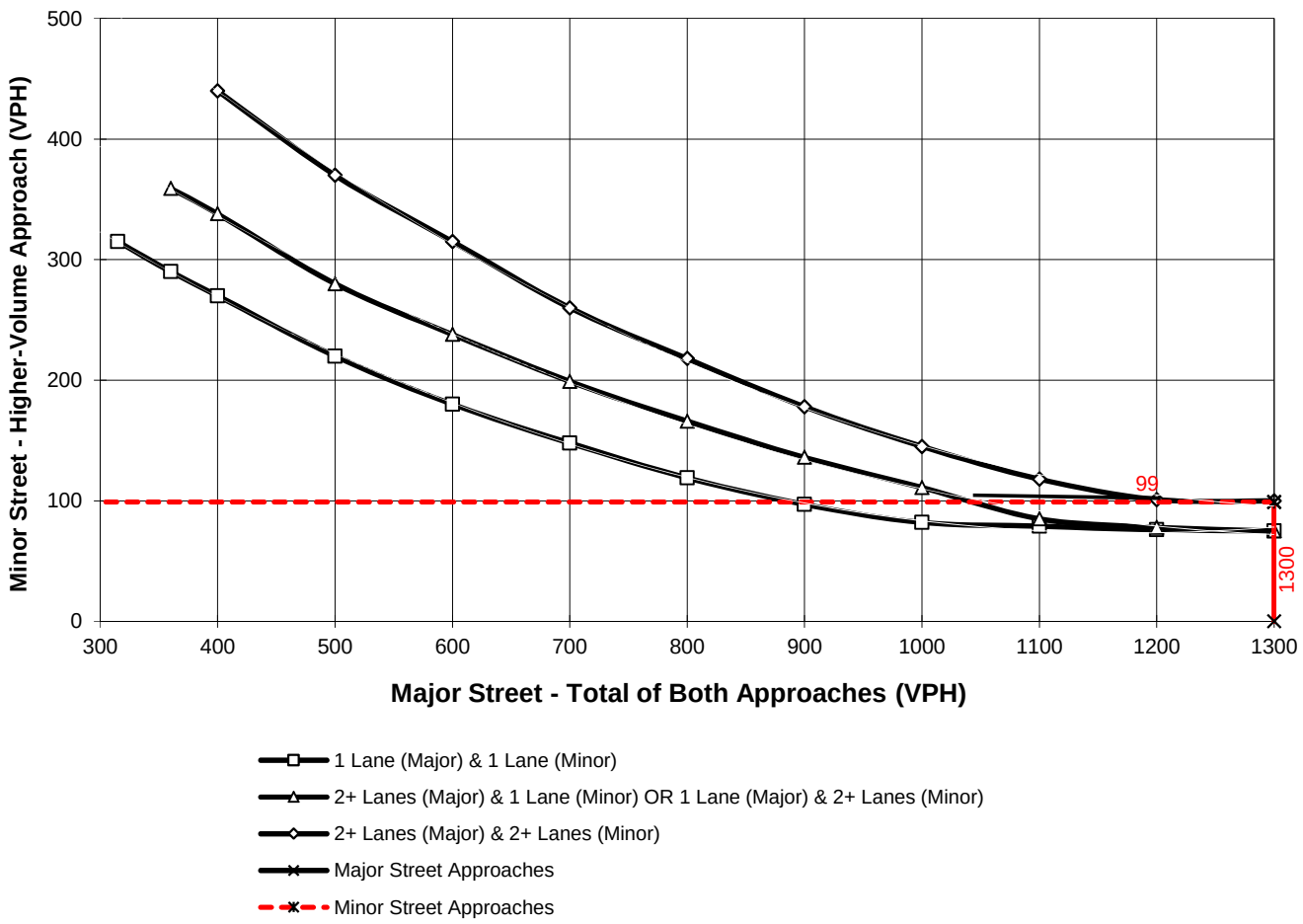

*Note: 100 vph applies as the lower threshold for a minor-street approach with two or more lanes and 75 vph applies as the lower threshold for a minor-street approach with one lane

Figure 4C-4. Warrant 3, Peak Hour (70% Factor)

(COMMUNITY LESS THAN 10,000 POPULATION OR ABOVE 64 km/h OR ABOVE 40 mph ON MAJOR STREET)

Traffic Conditions = **Existing (2015) Conditions - Weekday PM Peak Hour**

Major Street Name = **Indian Street**

Total of Both Approaches (VPH) = **981**
Number of Approach Lanes Major Street = **1**

Minor Street Name = **Grove View Road**

High Volume Approach (VPH) = **46**
Number of Approach Lanes Minor Street = **1**

SIGNAL WARRANT NOT SATISFIED

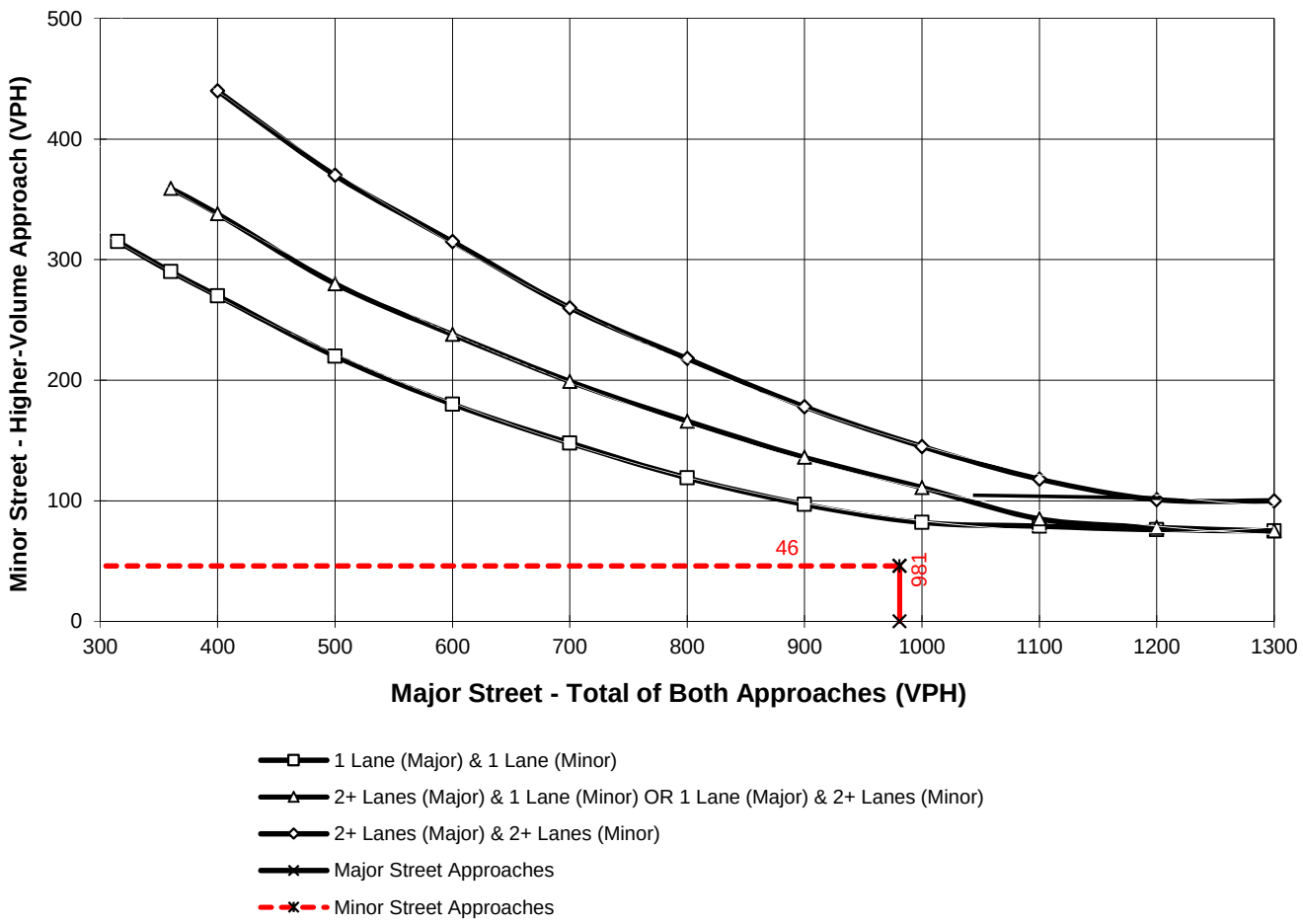

*Note: 100 vph applies as the lower threshold for a minor-street approach with two or more lanes and 75 vph applies as the lower threshold for a minor-street approach with one lane

APPENDIX 4.1:

CUMULATIVE DEVELOPMENT PROJECTS

This Page Intentionally Left Blank

Charlene Hwang So

From: Julia Descoteaux <juliad@moval.org>
Sent: Monday, June 08, 2015 2:59 PM
To: Charlene Hwang So
Cc: CMS Administrator; 'David Ornelas (dornelas@tbplanning.com)'
Subject: RE: 09301: Cumulative Project Review

Hi Charlene,

Is this list intended to include both entitled (but not built) and existing/built uses?

Please include the following on your list:

Tract 31618 Moreno Beach and Bay Avenue 55 SFD
PA15-0004 Perris south of JFK Retail Restaurant/Fast Food 2973sqft
PA14-0042 Edgemont/Eucalyptus MFDR 112 units

MV-8 Refers to a project never approved.
MC-18 is a Car Wash and Retail Convenience store.
PA13-0009 a Fueling Station on Alessandro at Indian (NEC)

Thank you,
Julia

Julia Descoteaux
Associate Planner
Community & Economic Development
City of Moreno Valley
p: 951.413.3209 | e: juliad@moval.org w: www.moval.org
14177 Frederick St., Moreno Valley, CA 92553

From: Charlene Hwang So [mailto:cso@urbanxroads.com]
Sent: Wednesday, June 03, 2015 4:09 PM
To: Julia Descoteaux
Cc: CMS Administrator
Subject: 09301: Cumulative Project Review
Importance: High

Hi Julia,

Could you please review the attached map and list of cumulative developments in the City of Moreno Valley, and provide any updates that you may have? We are trying to get a list of cumulative projects for inclusion in the traffic study for the Moreno Valley Logistics Center (Prologis) project. Please feel free to contact me with any questions or if you require any additional information. We have already reached out the adjacent jurisdictions as well: City of

Riverside, City of Perris, and County of Riverside. All but the City of Perris have already responded. Thank you in advance!

Regards,

CHARLENE SO, P.E.
Senior Transportation Engineer

41 Corporate Park, Suite 300
Irvine, CA 92606
(949) 336-5982 Direct
(949) 861-0177 Cell
(949) 660-1994 Main
urbanxroads.com

Charlene Hwang So

From: Julia Descoteaux <juliad@moval.org>
Sent: Tuesday, June 09, 2015 4:31 PM
To: David Ornelas; Charlene Hwang So
Cc: CMS Administrator
Subject: RE: 09301: Cumulative Project Review
Attachments: Cum deveop list.pdf

Attached please find the list with redlines. Please contact me with any questions.

Regards,
Julia

Julia Descoteaux
Associate Planner
Community & Economic Development
City of Moreno Valley
p: 951.413.3209 | e: juliad@moval.org w: www.moval.org
14177 Frederick St., Moreno Valley, CA 92553

From: David Ornelas [mailto:dornelas@tbplanning.com]
Sent: Monday, June 08, 2015 3:30 PM
To: Julia Descoteaux; Charlene Hwang So
Cc: CMS Administrator
Subject: RE: 09301: Cumulative Project Review

Thank you for your help, Julia. The only projects that need to be removed from the list are projects that are completely built and operational. Projects that are under construction can remain on the list.

Regards,

David Ornelas
Project Manager

T&B PLANNING, INC.
Phone: (619) 501-6041
dornelas@tbplanning.com

From: Julia Descoteaux [mailto:juliad@moval.org]
Sent: Monday, June 08, 2015 3:21 PM
To: David Ornelas; Charlene Hwang So
Cc: CMS Administrator
Subject: RE: 09301: Cumulative Project Review

Hi David,

The list has projects that are built. I will need to go back and review the list to make changes.

Julia

Julia Descoteaux
Associate Planner
Community & Economic Development
City of Moreno Valley
p: 951.413.3209 | e: juliad@moval.org w: www.moval.org
14177 Frederick St., Moreno Valley, CA 92553

From: David Ornelas [mailto:dornelas@tbplanning.com]
Sent: Monday, June 08, 2015 3:19 PM
To: Charlene Hwang So; Julia Descoteaux
Cc: CMS Administrator
Subject: RE: 09301: Cumulative Project Review

Hi, Julia:

Just to close the loop, with the addition of the projects listed below, is the cumulative project list approved for use in the CEQA analysis for Moreno Valley Logistics Center? The purpose of the list is to include proposed and approved (unbuilt) projects.

Regards,

David Ornelas
Project Manager

T&B PLANNING, INC.
Phone: (619) 501-6041
dornelas@tbplanning.com

From: Charlene Hwang So [mailto:cso@urbanxroads.com]
Sent: Monday, June 08, 2015 3:08 PM
To: Julia Descoteaux
Cc: CMS Administrator; David Ornelas
Subject: RE: 09301: Cumulative Project Review

Thanks Julia!

Regards,

CHARLENE SO, P.E.
Senior Transportation Engineer

41 Corporate Park, Suite 300
Irvine, CA 92606
(949) 336-5982 Direct
(949) 861-0177 Cell
(949) 660-1994 Main
urbanxroads.com

From: Julia Descoteaux [mailto:juliad@moval.org]
Sent: Monday, June 08, 2015 2:59 PM
To: Charlene Hwang So
Cc: CMS Administrator; 'David Ornelas (dornelas@tbplanning.com)'
Subject: RE: 09301: Cumulative Project Review

Hi Charlene,

Is this list intended to include both entitled (but not built) and existing/built uses?

Please include the following on your list:

Tract 31618 Moreno Beach and Bay Avenue 55 SFD
PA15-0004 Perris south of JFK Retail Restaurant/Fast Food 2973sqft
PA14-0042 Edgemont/Eucalyptus MFDR 112 units

MV-8 Refers to a project never approved.
MC-18 is a Car Wash and Retail Convenience store.
PA13-0009 a Fueling Station on Alessandro at Indian (NEC)

Thank you,
Julia

Julia Descoteaux
Associate Planner
Community & Economic Development
City of Moreno Valley
p: 951.413.3209 | e: juliad@moval.org w: www.moval.org
14177 Frederick St., Moreno Valley, CA 92553

From: Charlene Hwang So [mailto:cso@urbanxroads.com]
Sent: Wednesday, June 03, 2015 4:09 PM
To: Julia Descoteaux
Cc: CMS Administrator
Subject: 09301: Cumulative Project Review
Importance: High

Hi Julia,

Could you please review the attached map and list of cumulative developments in the City of Moreno Valley, and provide any updates that you may have? We are trying to get a list of cumulative projects for inclusion in the traffic study for the Moreno Valley Logistics Center (Prologis) project. Please feel free to contact me with any questions or if you require any additional information. We have already reached out the adjacent jurisdictions as well: City of Riverside, City of Perris, and County of Riverside. All but the City of Perris have already responded. Thank you in advance!

Regards,

CHARLENE SO, P.E.
Senior Transportation Engineer

41 Corporate Park, Suite 300
Irvine, CA 92606
(949) 336-5982 Direct
(949) 861-0177 Cell
(949) 660-1994 Main
urbanxroads.com

Cumulative Development Land Use Summary

TAZ	Project Name	Land Use[1]	Quantity	Units[2]	
	CITY OF MORENO VALLEY				
MV-1	PA 06-0152 & PA 06-0153 (First Park Nandina I & II)	High-Cube Warehouse	~~1182.918~~	TSF	483,767
MV-2	Integra Pacific Industrial Facility	High-Cube Warehouse	880.000	TSF	
~~MV-3~~	~~PA 08-0072 (Overton Moore Properties)~~	~~High-Cube Warehouse~~	~~520.000~~	~~TSF~~	
~~MV-4~~	~~Harbor Freight Expansion~~	~~High-Cube Warehouse~~	~~1279.910~~	~~TSF~~	
MV-5	PA 04-0063 (Centerpointe Buildings 8 and 9)	General Light Industrial	361.384	TSF	
MV-6	PA 07-0035; PA 07-0039 (Moreno Valley Industrial Park)	General Light Industrial	204.657	TSF	
		High-Cube Warehouse	409.920	TSF	
~~MV-7~~	~~PA 07-0079 (Indian Business Park)~~	~~High-Cube Warehouse~~	~~1560.046~~	TSF	
~~MV-8~~	~~PA 08-0047-0052 (Komar Cactus~~ Plaza)[3]	Hotel	~~110~~	~~RM5~~	
		Fast Food w/Drive Thru	~~8.000~~	~~TSF~~	
		Commercial	~~42.400~~	~~TSF~~	
MV-9	First Inland Logistics Center	High-Cube Warehouse	400.130	TSF	
MV-10	TM 33607	Condo/Townhomes	52	DU	
MV-11	PA 08-0093 (Centerpointe Business Park II)	General Light Industrial	99.988	TSF	
MV-12	PA 06-0021; PA 06-0022; PA 06-0048; PA 06-0049 (Komar Investments)	Warehousing	~~2057.400~~	TSF	287,100
MV-13	PA 06-0017 (Ivan Devries)	Industrial Park	569.200	TSF	
MV-14	Modular Logistics (Dorado Property)	High-Cube Warehouse	1109.378	TSF	
MV-15	PA 09-0004 (Vogel)	High-Cube Warehouse	~~1616.133~~	TSF	800,000
MV-16	TM 34748	SFDR	135	DU	
MV-17	First Nandina Logistics Center	High-Cube Warehouse	1450.000	TSF	
~~MV-18~~	~~PA 09-0031~~	~~Gas Station~~	~~12~~	~~VFP~~	
MV-19	First Park Nandina III	High-Cube Warehouse	691.960	TSF	
	Moreno Valley Commerce Park	High-Cube Warehouse	354.321	TSF	
MV-20	March Business Center	General Light Industrial	16.732	TSF	
		Warehousing	87.429	TSF	
		High-Cube Warehouse	1380.246	TSF	
MV-21	TM 33810	SFDR	16	DU	
MV-22	TM 34151	SFDR	37	DU	
MV-23	373K Industrial Facility	High-Cube Warehouse	373.030	TSF	
MV-24	TM 32716	SFDR	57	DU	
~~MV-25~~	~~TM 32917~~	~~Condo/Townhomes~~	~~227~~	~~DU~~	
MV-26	TM 33417	Condo/Townhomes	60	DU	
MV-27	TM 34988	Condo/Townhomes	271	DU	
MV-28	TM 34216	Condo/Townhomes	39	DU	
MV-29	TM 34681	Condo/Townhomes	49	DU	
MV-30	PA 08-0079-0081 (Winco Foods)	Discount Supermarket	95.440	TSF	
		Specialty Retail	14.800	TSF	
MV-31	Moreno Beach Marketplace (Lowe's)	Commercial Retail	175.000	TSF	
	Auto Mall Specific Plan (Planning Area C)	Commercial Retail	304.500	TSF	
	Westridge	High-Cube Warehouse	937.260	TSF	
	ProLogis	High-Cube Warehouse	1916.190	TSF	
		Warehousing	328.448	TSF	
	World Logistics Center	High-Cube Warehouse	41400.000	TSF	
		Warehousing	200.000	TSF	
		Gas Station w/ Market	12	VFP	
		Existing SFDR	7	DU	

Cumulative Development Land Use Summary

TAZ	Project Name	Land Use[1]	Quantity	Units[2]
~~MV-32~~	~~Quail Ranch~~ Specific Plan	Private School (K-12)	300	STU
		Golf Course	18	Holes
		Hotel	500	RMS
		Specialty Retail	66.667	TSF
		General office	66.667	TSF
		Assisted Living	500	Beds
		Senior Living (Detached)	200	DU
		SFDR	600	DU
MV-33	a TR 32460 (Sussex Capital)	SFDR	57	DU
	b TR 32459 (Sussex Capital)	SFDR	11	DU
	c TR 30411 (Pacific Communities)	SFDR	24	DU
	d TR 33962 (Pacific Scene Homes)	SFDR	31	DU
	e TR 30998 (Pacific Communities)	SFDR	47	DU
MV-34	~~a Westridge Commerce Center~~	~~High-Cube Warehouse~~	~~937.260~~	~~TSF~~
	b P06-158 (Gascon)	Commercial Retail	116.360	TSF
	c Auto Mall Specific Plan (PAC)	Commercial Retail	304.500	TSF
	d ProLogis	Warehousing	367.000	TSF
		High-Cube Warehouse	1901.000	TSF
	e TR 35823 (Stowe Passco)	SFDR	261	DU
		Apartments	216	DU
MV-35	TR 36340	SFDR	275	DU
MV-36	a TR 31771 (Sanchez)	SFDR	25	DU
	b TR 34397 (Winchester Associates)	SFDR	52	DU
	c TR 32645 (Winchester Associates)	SFDR	53	DU
MV-37	Lowe's (Moreno Beach Marketplace)	Home Improvement Store	175.000	TSF
MV-38	~~a Convenience Store/ Fueling Station~~	~~Gas Station w/ Market~~	~~38.750~~	~~TSF~~
	b Senior Assisted Living	Assisted Living Units	139	DU
	c TR 31590 (Winchester Associates)	SFDR	96	DU
	d TR 32548 (Gabel, Cook & Associates)	SFDR	107	DU
	~~e 20th Corp. & Granite Capitol~~	~~SFDR~~	~~92~~	~~DU~~
	f TR 32218 (Whitney)	SFDR	63	DU
	~~g Moreno Marketplace~~	~~Commercial Retail~~	~~93.788~~	~~TSF~~
	h Medical Plaza	Medical Offices	311.633	TSF
MV-39	a Moreno Medical Campus	Medical Offices	80.000	TSF
	b Aqua Bella Specific Plan	SFDR	2,922	DU
	c TR 34329 (Granite Capitol)	SFDR	90	DU
	d Cresta Bella	General Office	30.000	TSF
MV-40	Moreno Valley Industrial Center (Industrial Area SP)	General Light Industrial	354.810	TSF
MV-41	Centerpointe Business Park	General Light Industrial	356.000	TSF
MV-42	Moreno Valley Shopping Center	Free Standing Discount Store	189.520	TSF
		Gas Station w/ Market / Car Wash	16	VFP
MV-43	TR 31305 / Richmond American	Residential	87	DU
MV-44	~~TR 32505 / DR Horton~~	~~Residential~~	~~72~~	~~DU~~
MV-45	TR 34329 / Granite Capitol	Residential	90	DU
MV-46	TR 31814 / Moreno Valley Investors	Residential	60	DU
MV-47	TR 33771 / Creative Design Associates	Residential	12	DU
MV-48	TR 35663 / Kha	Residential	12	DU
MV-49	TR 22180 / Young Homes	Residential	140	DU
MV-50	TR 32515	Residential	161	DU
MV-51	TR 32142	Residential	81	DU
MV-52	San Michele Industrial Center (Industrial Area SP)	General Light Industrial	865.960	TSF
MV-53	Commercial Medical Plaza	Medical Offices	311.633	TSF
MV-54	Edgemont Street, South of Eucalyptus Av.	Apartments	112	DU
MV-55	28860 Professor's Fun IV, LLC/Winchester Associates, Inc.	SFDR	9	DU
MV-56	20636 Pacific Communities	SFDR	67	DU
MV-57	31297 Randy McFarland	SFDR	7	DU
MV-58	31394 Pigeon Pass, Ltd.	SFDR	78	DU
MV-59	31442 SKG Pacific Enterprises Inc.	SFDR	63	DU
MV-60	31517 Professors Prop Six/Winchester Assoc.	SFDR	83	DU

Cumulative Development Land Use Summary

TAZ	Project Name	Land Use[1]	Quantity	Units[2]
MV-61	31621 Peter Sanchez	SFDR	25	DU
MV-62	32005 Red Hill Village, LLC	SFDR	214	DU
MV-63	32126 Salvador Torres	SFDR	35	DU
MV-64	32194 Arman Pezeshkifar	SFDR	32	DU
MV-65	32408 Sanstone Inc.	SFDR	80	DU
MV-66	32844 Winchester Associates	SFDR	17	DU
MV-67	32978 Focus Estates	SFDR	19	DU
MV-68	33024 Adam Wislar	SFDR	8	DU
MV-69	33275 Jose Guzman	SFDR	4	DU
MV-70	33388 SCH Development, LLC	SFDR	16	DU
MV-71	33436 Winchester Associates	SFDR	105	DU
~~MV-72~~	~~33626 Kincaid Development, Inc.~~	~~SFDR~~	~~23~~	~~DU~~
MV-73	33963 Rance Garrett	SFDR	31	DU
MV-74	34043 RM3 Building and Development	SFDR	12	DU
MV-75	31621 Beazer Homes	SFDR	274	DU
MV-76	30268 Pacific Communities	SFDR	83	DU
MV-77	31414 GRF - Majestic Hills	SFDR	31	DU
MV-78	31494 Winchester Associates	SFDR	12	DU
MV-79	32715 GFR - Trinity	SFDR	30	DU
MV-80	33256 Granite Homes	SFDR	79	DU
MV-81	32711 Isaac Genah	SFDR	9	DU
MV-82	35530 Moreno Gilman 650, LLC-Quail Ranch	SFDR inactive	1,105	DU
MV-83	35534 Leedco Engineers	SFDR	12	DU
MV-84	36436 CV Communities	SFDR	159	DU
MV-85	36401 Continental East Fund III, LLC	SFDR	92	DU
MV-86	32215 Winchester Associates "Scottish Village"	MFDR	194	DU
MV-87	32756 Jimmy Lee	MFDR	24	DU
MV-88	35369 Tason Myers Property	MFDR	12	DU
MV-89	35414 Lincoln Property Co. Southwest	MFDR	266 ~~240~~	DU
MV-90	35769 Michael Chen	MFDR	16	DU
~~MV-91~~	~~PA08-0013 Palm Desert Development "Rancho Dorado North"~~	~~MFDR~~	~~80~~	~~DU~~
MV-92	PA09-0006 Jim Nydam	MFDR	15	DU
MV-93	35861 Frederick Homes	MFDR	24	DU
MV-94	36038 Alessandro Village Plaza, LLC	MFDR	96	DU
MV-95	35304 Jimmy Lee	MFDR	12	DU
MV-96	Alessandro & Lasselle	Shopping Center	140.000	TSF
~~MV-97~~	~~Burger King - Fast Food - 24800 Sunnymead~~	~~Fast Food w/Drive Thru~~	~~--~~	~~TSF~~
MV-98	~~Nightclub~~	~~Retail~~	~~11.000~~	~~TSF~~
	~~Aerosports Trampoline Park~~	~~Recreation Community Center~~	~~34.500~~	~~TSF~~
MV-99	Food 4 Less - Fueling Station	Gas Station with Convenience Market	16	VFP
~~MV-100~~	~~Lakeshore Village Marketplace~~	~~Shopping Center~~	~~140.000~~	~~TSF~~
MV-101	El Paso (food court)	Fast Food no Drive Thru	--	TSF
~~MV-102~~	~~Potato Corner~~	~~Fast Food no Drive Thru~~	~~--~~	~~TSF~~
MV-103	O'Reilly Automotive	Automobile Parts Sale	7.500	TSF
MV-104	O'Reilly Automotive	Automobile Parts Sale	7.500	TSF
MV-105	Restaurant	Restaurant	9.000	TSF
MV-106	Rancho Belago Plaza - Retail	Retail	14.000	TSF
MV-107	~~24-Hour Fitness~~	~~Fitness Club~~	~~--~~	~~TSF~~
	~~Rivals Sports Bar & Grill~~	~~Restaurant~~	~~--~~	~~TSF~~
MV-108	Yum Yum Donut Shop	Coffee/Donut Shop w/o Drive-Thru	4.351	TSF — Not entitled
MV-109	Hawthorn Inn & Suites	Hotel	79	RMS
MV-110	Sleep Inn Suites	Hotel	66	RMS
~~MV-111~~	~~Fresenius Medical Care Center~~	~~Medical Offices~~	~~12.000~~	~~TSF~~
MV-112	Integrated Care Communities	Nursing Home	44.000	TSF
MV-113	Kaiser Permanente - Emergency Room Expansion	Medical Offices	--	TSF
MV-114	Moreno Valley Professional Center	General Office	84.000	TSF
MV-115	Olivewood Plaza - Office Building	General Office	23.000	TSF
MV-116	Renaissance Village of Moreno Valley	Senior Adult Housing-Attached	44 ~~140~~	~~DU~~
MV-117	Riverside County Office Building	General Office	52.000	TSF

Cumulative Development Land Use Summary

TAZ	Project Name	Land Use[1]	Quantity	Units[2]
MV-118	Gateway Business Park	Residential Condo/Townhouse	34	DU
MV-119	Shaw Development	High-Cube Warehouse	367.000	TSF
MV-120	IDS/Real Estate Group - Nandina Distribution Center	High-Cube Warehouse	697.000	TSF
MV-121	Stoneridge Town Centre - Vacant Restaurant	Restaurant	5700.000	TSF
MV-122	Ironwood Residential	SFDR	144	DU
MV-123	TTM 31592 (P 13-078) Covey Ranch	SFDR	115	DU
MV-124	PA 06-0014 (Pierce Hardy Limited Partnership)	Lumbar Yard	67.000	TSF
MV-125	P06-1408	Retail	75.300	TSF
MV-126	Moval Assemblage	High-Cube Warehouse	456.337	TSF
MV-127	Bella Vista Apartments	Apartments	220	DU — Not Entitled
MV-128	Moreno Valley Logistics Center	High-Cube Warehouse	1351.770	TSF
		General Light Industrial	385.748	TSF

[1] SFDR = Single Family Detached Residential ; MFDR = Multi-Family Detached Residential

[2] DU = Dwelling Units; TSF = Thousand Square Feet; SP = Spaces; VFP = Vehicle Fueling Positions; RMS = Rooms; AC = Acres; EMP = Employees

[3] Source: Cactus Avenue and Commerce Center Drive Commercial Center TIA, Urban Crossroads, Inc., December 9, 2008 (Revised).

[4] Source: March Lifecare Campus Specific Plan Traffic Impact Analysis, Mountain Pacific, Inc., May 2009 (Revised).

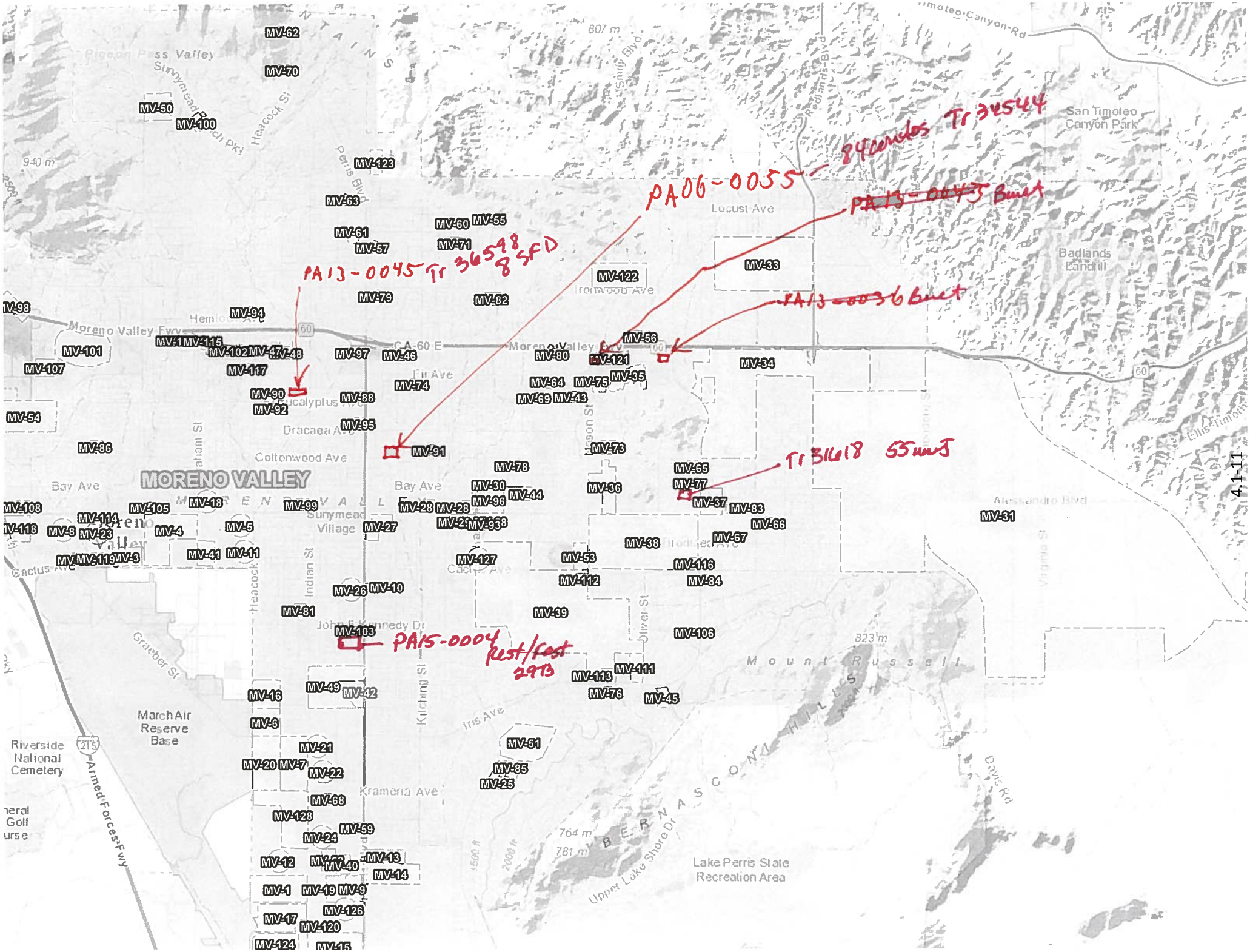
PA06-0055 84 condos Tr 34544
~~PA13-0043~~ Bmkt
PA13-0045 Tr 36548 8 SFD
~~PA13-0036~~ Bmkt
Tr 31618 55 units
PA15-0004 Rest/~~Rest~~ 29B
MORENO VALLEY
Moreno Valley Fwy
CA-60 E
Bay Ave
Cottonwood Ave
Dracaea Ave
Eucalyptus Ave
Locust Ave
Iris Ave
Cactus Ave
Kramer Ave
John F Kennedy Dr
Alessandro Blvd
Davis Rd
Heacock St
Indian St
Kitching St
Perris Blvd
Nason St
Oliver St
Graber St
Pigeon Pass Valley
Sunnymead Ranch Pkwy
Sunnymead Village
Hemlock Ave
Ironwood Ave
Redlands Blvd
Timoteo Canyon Rd
San Timoteo Canyon Park
Badlands Landfill
Ellis Timoth
March Air Reserve Base
Riverside National Cemetery
Armed Forces Fwy
Mount Russell
SAN BERNARDINO HILLS
Upper Lake Shore Dr
Lake Perris State Recreation Area
807 m
940 m
823 m
764 m
781 m

Cecilia So

From: David Ornelas [dornelas@tbplanning.com]
Sent: Thursday, May 28, 2015 10:56 AM
To: Charlene Hwang So; Tracy Zinn
Cc: Aric Evatt; CMS Administrator; Cecilia So
Subject: RE: 09301: Moreno Valley Logistics Cumulative Projects

Thanks, Charlene. I have three comments:

- The Gateway Center project (R-77) is included on the City of Riverside list, but the site is actually located in unincorporated Riverside County (but is within the City of Riverside's sphere of influence). Also, the name of the project has changed to "University Highlands" and the land use plan has changed. The updated land use abstract is below.

LAND USE	GROSS ACRES	DENSITY	TARGET DWELLING UNITS	SQUARE FOOTAGE
RESIDENTIAL				
MEDIUM DENSITY RESIDENTIAL - MDR - 2-5 DU/AC	41.0	4.5	185	
MEDIUM HIGH DENSITY RESIDENTIAL - MHDR - 5-8 DU/AC	34.9	6.3	220	
VERY HIGH DENSITY RESIDENTIAL - VHDR - 14-20 DU/AC	22.3	14.4	320	
HIGHEST DENSITY RESIDENTIAL - HHDR - 20+ DU/AC	16.5	30.9	510	
MIXED USE - MU	30.8	31.4	965	
TOTAL RESIDENTIAL	**145.4**	**15.1**	**2,200**	**30,000**
COMMERCIAL				
COMMERCIAL	1.9			20,000
PARKS AND OPEN SPACE				
PARKS	42.4			
OPEN SPACE	95.3			
TOTAL PARKS AND OPEN SPACE	**137.7**			
ROADS	27.2			
N.A.P.	7.5			
PROJECT TOTAL	**319.7**	**6.9**	**2,200**	**50,000**

- Indian Business Park (MV-7): This project has been constructed (north of and adjacent to the Moreno Valley Logistics Center site). If Michael Lloyd does not comment on this project, please confirm with him if he would like it to be included on the list as the traffic from the project should have been captured in your traffic counts.

- Prologis (MV-31): It is my understanding this project was revised at the City Council hearing to include approximately 1.5 million s.f. and 126 homes (I am quoting these numbers from a news article – the City Council meeting minutes are not on the City's website – so they should not be considered 100% accurate). Michael Lloyd should have the specific numbers, but if he does not we can always ask Prologis.

David Ornelas
Project Manager

T&B PLANNING, INC.
Phone: (619) 501-6041
dornelas@tbplanning.com

From: Charlene Hwang So [mailto:cso@urbanxroads.com]
Sent: Wednesday, May 27, 2015 5:56 PM
To: Tracy Zinn; David Ornelas
Cc: Aric Evatt; CMS Administrator; Cecilia So
Subject: 09301: Moreno Valley Logistics Cumulative Projects
Importance: High

Hi Tracy and David,

We have compiled a list of cumulative projects over the past few years for this region (used for First Nandina and Modular) and have that list attached along with a corresponding map. We've modified the list from what we've included in past TIAs to be sorted by jurisdiction in order to improve the efficiency in adding and removing projects over time. We have sent the list to the City of Riverside, City of Moreno Valley and City of Perris to obtain updates. I have attached each of the e-mails we sent requesting review of our current list. I have not yet received any response/updated information from any of the jurisdictions.

We did not contact the County of Riverside as I have already received an updated list of cumulative projects for the area from the County on another project we recently worked on.

Let me know if there are other jurisdictions you would like us to reach out to.

Regards,

CHARLENE SO, P.E.
Senior Transportation Engineer

URBAN CROSSROADS

41 Corporate Park, Suite 300
Irvine, CA 92606
(949) 336-5982 Direct
(949) 861-0177 Cell
(949) 660-1994 Main
urbanxroads.com

Charlene Hwang So

From: Tsang, Kevin <KTSANG@rctlma.org>
Sent: Thursday, April 30, 2015 3:06 PM
To: Charlene Hwang So
Cc: CMS Administrator; Isidro Abreo
Subject: RE: 09347: Cumulative List

Please see below.

Thanks

From: Charlene Hwang So [mailto:cso@urbanxroads.com]
Sent: Thursday, April 23, 2015 1:43 PM
To: Tsang, Kevin
Cc: CMS Administrator; Isidro Abreo
Subject: 09347: Cumulative List
Importance: High

Hi Kevin,

Just trying to sort through the cumulative projects from the County that need to be added to our list. Could you please review and provide us with needed info or if projects should be removed? Thanks in advance!

Below is a list of projects we will be including because there was no expiration date, please let us know if there are projects that should be removed:

1. CUP03527 – 8,000 sf Warehouse: Keep
2. CUP03599 – 52,798 sf hotel: Keep
3. PP09997R2 – 12,800 sf maintenance building: You may remove, existing.
4. PP16932 – 12,000 sf manufacturing building: You may remove, existing.
5. PP24608 – 9,280 sf feed and grain sales: Keep
6. PP25252 – 399,150 sf warehouse: You may remove, existing.

The cumulative projects listed below did not have an expiration date and are missing information or we need to confirm information in order to be added:

1. CUP03632 – Auction/Sales yard (need sf/acreage): You may remove, existing.
2. PM32699 – Need land use and quantity: 2 SFDU
3. PM23532 – Gas Station/Convenience Store (need # of pumps or sf): You may remove, no activity for 5+ years.
4. PP24002 – Feed Store (need sf) : You may remove, no activity for 5+ years.
5. PP25001 – Feed and Grain Sales (need sf) : You may remove, no activity for 3+ years.
6. PP25699 – 2 drive-thru restaurants (need total sf): (2) 2,800 SF fast food w/ DT, 19,000 SF retail
7. PUP00892 – Adult Residential Care (need # of DUs or Beds and type of adult care facility) : You may remove, no activity for 5+ years.
8. PP14485R1 – Heavy Equipment Auction Yard (need sf or acreage): : You may remove, no activity for 5+ years.
9. PP18961 – National Archives Warehouse (need sf): You may remove, existing.
10. PUP00325 – need land use and quantity: You may remove, no activity for 5+ years.
11. PUP00856 – Day Care Center (need # of students): You may remove, existing.
12. TR30592 – 131 single family DUs: Keep

The following cumulative projects will not be included as they are low traffic generators (less than 50 peak hours trips):

1. PM35634 – 2 single family DUs: OK
2. PM36034 – 16 single family DUs: OK
3. PM36078 – 2 single family DUs: OK
4. PP24818 – Home conversion to 1,860 sf Church: OK
5. PP25019: You may remove, no activity for 4+ years.
6. PP25768: Keep, 52,450 SF manufacturing
7. TR33869 – 39 single family DUs: OK
8. CUP01634: You may remove, existing.
9. CUP03620R1: Keep, 8 VFP gas station w/ Conv. Store
10. CUP03642: You may remove, existing.
11. PM33357 – 2 single family DUs: OK
12. PM34971 – 2 single family DUs: OK
13. PM35780 – 2 single family DUs: OK
14. PP15189R1: You may remove, cell tower.

On a separate note, I wanted to follow up on your review of the scoping agreement for TTM No. 35570 (near Washington and Benton). Let me know if you have any questions.

Regards,

CHARLENE SO, P.E.
Senior Transportation Engineer

41 Corporate Park, Suite 300
Irvine, CA 92606
(949) 336-5982 Direct
(949) 861-0177 Cell
(949) 660-1994 Main
urbanxroads.com

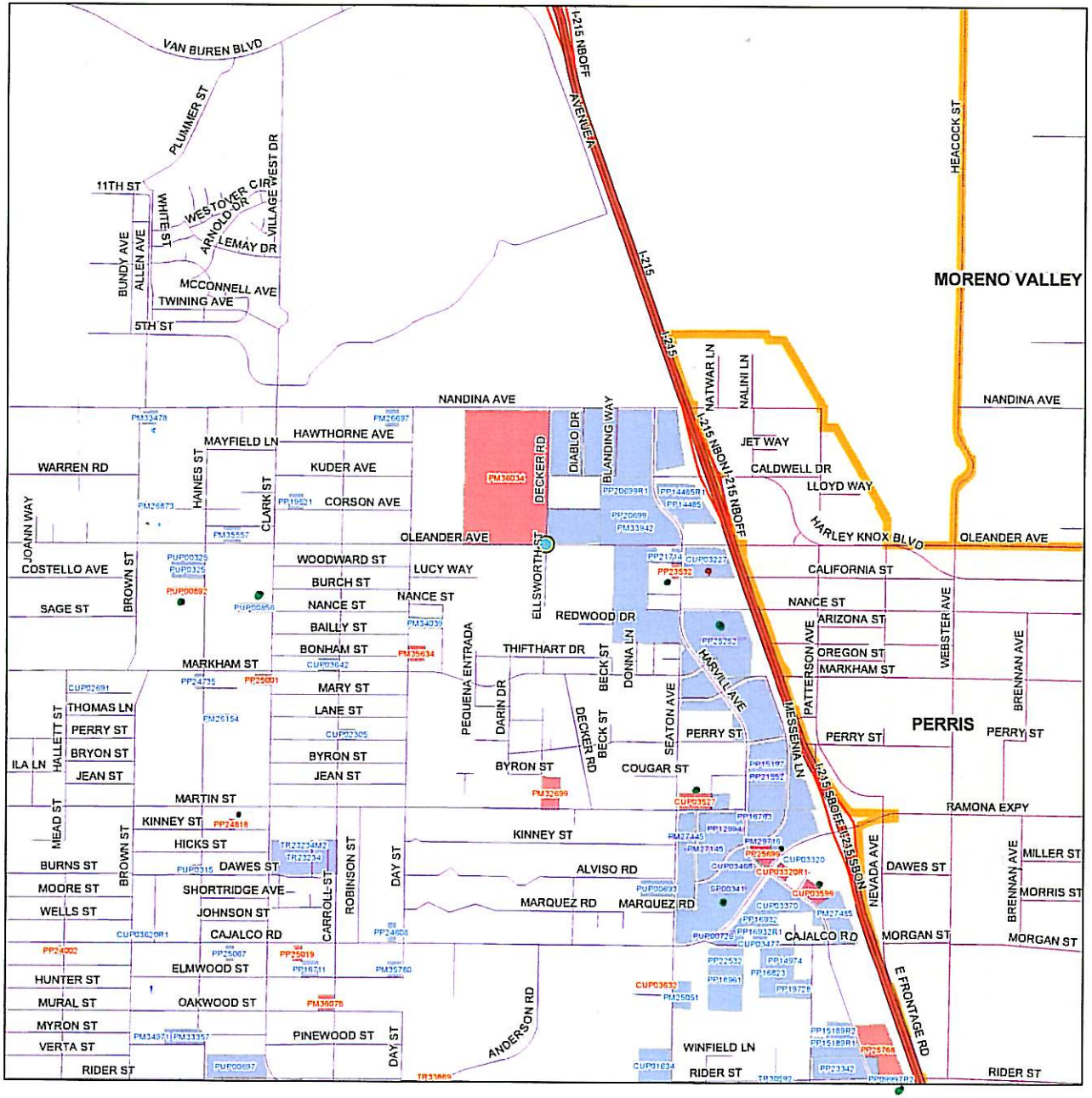

The County of Riverside assumes no warranty or legal responsibility for the information contained on this map. Data and information represented on this map is subject to updates, modifications and may not be complete or appropriate for all purposes. County GIS and other sources should be queried for the most current information. Do not copy or resell this map.

N

County List

- Cities (Outline)
- ACTIVE CASES
- APPROVED CASES

0 1,000 2,000 4,000 Feet

Printed by ktsang on 6/16/10

Active Cases as of 4/9/2015

CASE NAME	STATUS	APPLIED DATE	APPROVAL DATE	EXPIRED DATE
CASE DESCRIPTION				
CUP03320R1	DRT	20051221	0	20000000
ALLOW LIQUOR SALES USE WITHIN EXISTING GAS STATION			Existing	
CUP03527	DRT	20060915	0	20000000
8000 SF WAREHOUSE/OFFICE/CONCRETE MIXING SILO&STOR				
CUP03599	DRT	20080625	0	20000000
TO CONSTRUCT A THREE-STORY 52,798 SQ.FT. HOTEL WI				
CUP03632	DRT	20090915	0	20000000
COMMUNITY AUCTION AND SALES YARD				
PM32699	DRT	20060223	0	20000000
SCHED H DIVISION OF 5 ACRES INTO (2) PARCELS				
PM35634	DRT	20071221	0	0
DIVIDE 1.89 ACRES INTO 2 LOTS				
PM36034	DRT	20080612	0	20000000
SCHEDULE "E" DIVISION OF 100 ACRES INTO 16 LOTS				
PM36078	DRT	20090521	0	20000000
SUBDIVIDE 2.9 ACRES INTO TWO LOTS				
PP23532	DRT	20080617	0	20000000
GAS STATION AND MINI MARKET & RETAIL STORES				
PP24002	DRT	20090225	0	20000000
PROPOSED FEED STORE				
PP24818	DRT	20101227	0	20000000
1,860 SQ FT HOUSE CONVERT TO CHURCH				
PP25001	DRT	20110818	0	20000000
FEED AND GRAIN SALES				
PP25019	APPLIED	20110921	0	0
ADD SMOKE SHOP/RECYCL COLL FAC/PROPANE TANK TO EXI				
PP25699	DRT	20141107	0	20000000
PLOT PLAN TO CONSTRUCT TWO (2) DRIVE THRU RESTAURA				
PP25768	DRT	20150226	0	0
PP TO REMOVE AN EXISTING GRAIN STORAGE BINS AND TO				
PUP00892	BOS	20070713	0	20000000
ADULT RESIDENTIAL CARE FACILITY				
TR33869	APPLIED	20051005	0	0
SUBDIVIDE 50.2 AC (3 PARCELS) INTO 39 SFR LOTS				

Approved Cases as of 04/09/2015

CASE NAME	STATUS	APPLIED DATE	APPROVAL DATE	EXPIRED DATE
CASE DESCRIPTION				
CUP01634	APPROVED	02/01/2008	0	NA
PROPOSAL TO REPLACE RESIN PROCESSING SYSTEM				
CUP02305	APPROVED	01/28/2008	0	NA
CUP02691	EXPIRED	12/22/2000	19840904	09/04/1984
AUTOMOBILE DISMANTLER FACILITY				
CUP03227	APPROVED	04/01/1996	19960604	06/04/1998
RESINS MANUFACTURING FACILITY				
CUP03315	APPROVED	05/18/2000	20000725	NA
GAS STATN/CONV STORE/2 FAST FOOD/1 DINE IN RESTRNT				
CUP03320	APPROVED	08/15/2000	20010206	06/01/2030
CONVENIENCE STORE/FAST FOOD RESTAURANT/CAR WASH/			Existing	JITB/Circ.K/76 Gas w/CW.
CUP03370	APPROVED	04/03/2002	20030701	07/01/2006
TRUCK/GASSTATION COMM CTR SEVERAL BLDGS @ 32,000SF				
CUP03425	APPROVED	02/19/2004	20071114	11/14/2009
(4)CONCRETE TILT-UP BUILDINGS(TRUCKING OPERATIONS)				
CUP03468	APPROVED	09/15/2005	20080311	03/11/2010
PROPOSED GAS STATION,FASTFOOD,CARWASH, STORE				
CUP03477	APPROVED	11/14/2005	20080402	04/02/2010
CUP FOR EXISTING STRUCT FOR OFFICE SP/VEHICLE STOR				
CUP03620	APPROVED	03/30/2009	20120118	01/18/2014
GAS STATION/CONV STORE/RETAIL BUILDING				
CUP03620R1	APPROVED	10/23/2013	20141106	NA
ALLOW BEER&WINE SALES WITHIN GAS STATION/MARKET				
CUP03642	APPROVED	04/19/2010	20140128	NA
EXISTING USE AS CONVENIENT STORE W/PROPANE &ALCOHO				
PM25051	APPROVED	01/25/1990	19910514	05/14/1996
DIVIDE APPROX 4 ACRES INTO 4 PARCELS				
PM26154	APPROVED	07/17/1990	19920225	02/25/1998
SUBDIVIDE INTO 4 LOTS				
PM26697	APPROVED	05/02/1991	19970211	02/11/2000
SUBDIVIDE 2.12 ACRES INTO TWO PARCELS.				
PM26873	APPROVED	04/12/1991	19920707	07/07/1998
DIVIDE 2.50 ACRES INTO 4 PARCELS				
PM27140	APPROVED	09/25/1991	19920526	05/26/1998
3.99AC INTO TEN INDUSTRIAL PARCELS				
PM27445	APPROVED	03/25/1992	19930316	03/16/1999
DIVIDE APPROX 14 ACRES INTO 10 LOTS				
PM27485	APPROVED	04/21/1992	19930126	01/26/1999
SUBDIVIDE 26.73 ACRES INTO 10 INDUSTRIAL LOTS				
PM29716	APPROVED	05/18/2000	20000725	07/25/2004
SUBDIVIDE 4.45 ACRES INTO 4 COMMERCIAL PARCELS				
PM33357	APPROVED	10/18/2005	20080421	04/21/2015
SCHED H DIVISION OF 3 AC INTO 3 ONE AC PARCELS.				

Approved Cases as of 04/09/2015

CASE NAME	STATUS	APPLIED DATE	APPROVAL DATE	EXPIRED DATE
CASE DESCRIPTION				
PM33478	APPROVED	03/21/2006	20070730	07/30/2013
SCHED H DIVISION OF 2.35AC INTO TWO 1-AC PARCELS.				
PM33942	APPROVED	07/28/2005	20080625	06/25/2017
PM33942 PROPOSES A SCHEDULE E SUBDIVISION OF 68.85				
PM34039	APPROVED	10/03/2005	20061113	11/13/2014
SCHED H DIVISION OF 3 AC INTO 3 1-AC. MIN PARCELS				
PM34971	APPROVED	05/31/2007	20080616	06/16/2015
SCHED H DIVISION OF 2.29 AC INTO 2 SFR PARCELS.				
PM35557	APPROVED	08/13/2007	20080722	07/22/2015
Schedule H subdivision of 2.5ac into two parcels				
PM35780	APPROVED	09/20/2007	20080630	06/30/2015
SCHED H DIVISION OF 2.02 ACRES INTO TWO PARCELS.				
PP09997R1	APPROVED	02/19/1997	19970424	NA
REV.PP ADD 10,000 SQFT MAINT BLD. 2400 SQFT OFFICE				
PP09997R2	APPROVED	08/10/2000	20010502	NA
RVP FOR 12,800 SQ FT MAINT BLDG W/OUTDOOR STORAGE				
PP12994	APPROVED	09/25/1991	19920309	03/09/1994
PLOT PLAN FOR PLANNED INDUSTRIAL DEVELOPMENT FOR 8				
PP14485	APPROVED	12/19/1995	19960122	01/22/1999
CONSTRUCTION EQUIP AUCTION				
PP14485R1	APPROVED	08/20/2001	20021104	NA
HEAVY EQUIPMENT AUCTION YARD				
PP14974	APPROVED	04/25/1997	19970630	06/30/1999
STEEL BUILDING FABRICATION				
PP15189R1	APPROVED	02/28/2002	20020812	NA
CO-LOCATE ANT'S/EXPAND LEASE AREA-SEE DESCRIPTION				
PP15189R2	APPROVED	07/03/2007	20070809	NA
INSTALL 30KW EMERGENCY GENERATOR W/IN FACILITY			Non-traffic	
PP15197	APPROVED	10/30/1997	19971201	12/01/1999
3 INDUSTRIAL BUILDINGS				
PP16711	APPROVED	09/01/2000	20011217	NA
150' UNMANNED TELECOMMUNICATION MONOPOLE			Non-traffic	
PP16763	APPROVED	10/11/2000	20001212	12/12/2002
19500 SQ FT IND BUILDING (18,570 WAREHOUSE 930 OFF				
PP16823	APPROVED	11/17/2000	20010208	02/08/2006
TO CONSTRUCT A 22,000 SQ FT MANUFACTURING FACILITY				
PP16932	APPROVED	02/02/2001	20010423	NA
SHEET METAL MANUFACTURING, 12,000 SQ FT STEEL BLDG				
PP16932R1	APPROVED	10/17/2008	20110711	07/12/2013
ADD RECYCLING COLLECTION CENTER TO A 12,000 S.F. P				
PP18961	APPROVED	10/28/2003	20041215	NA
NATIONAL ARCHIVES & RECORDS ADMIN. WAREHOUSE FAC.				
PP19521	APPROVED	06/11/2004	20061113	11/13/2008
HAY AND FEED STORE				

Approved Cases as of 04/09/2015

CASE NAME	STATUS	APPLIED DATE	APPROVAL DATE	EXPIRED DATE
CASE DESCRIPTION				
PP19728	APPROVED	09/01/2004	20070227	02/27/2009
CONTRACTORS STORAGE YARD, VEHICLE MAINT AND ADMIN				
PP20699	APPROVED	07/28/2005	20080625	06/25/2012
PP20699 PROPOSES TO DEVELOP FIVE (5) INDUSTRIAL /				
PP20699R1	APPROVED	06/16/2011	20110816	08/16/2013
REDUCE FROM 5 INDUS BLDG TO 3/MODIFY DRAINAGE AND				
PP21552	APPROVED	03/21/2006	20061218	12/18/2008
PROSPD 6 LIGHT INDUS BLDGS; TOTAL OF 14 PARCELS.				
PP21714	APPROVED	05/04/2006	20070921	09/21/2009
UNMNND WRLSS COMM 65' MONOTREE BROADLEAF/OUTDOOR E				
PP22532	APPROVED	02/09/2007	20080107	01/07/2010
OFFICE AND MANUFACTURING FACILITY				
PP23342	APPROVED	03/20/2008	20080820	10/28/2013
MULTI USE INDUSTRIAL PARK WAREHOUSE BUILDINGS				
PP24608	APPROVED	06/17/2010	20140908	09/08/2016
FEED & GRAIN SALES W/6400 SF HAY BARN, 2880 SF STO				
PP24735	APPROVED	09/30/2010	20120326	03/26/2014
50' MONOPINE/12 PANNL ANTS/1 MICRO/6 EQUIP CABINTS				
PP25067	APPROVED	12/22/2011	20130603	06/03/2015
VERIZON 65 FT MONOEUCALYPTUS WIRELESS FACILITY/12			non-traffic	
PP25252	APPROVED	12/20/2012	20130205	NA
+ 399,150 SF WAREHOUSE/OFFICE BLDG FOR DISCOUNT TIRE				
PUP00325	APPROVED	12/26/2000	0	NA
?				
PUP00693	APPROVED	11/17/1989	19910108	01/08/1993
BUILD A CHURCH				
PUP00697	APPROVED	12/22/1989	19940816	08/15/1996
CHURCH FACILITY				
PUP00726	APPROVED	07/26/1991	19911015	10/15/1993
OFFICES AND DAY CARE CENTER				
PUP00765	APPROVED	03/31/1995	19950905	09/05/1997
PUBLIC USE PERMIT FOR 32-BED RESIDENTIAL CARE FACI				
PUP00856	APPROVED	07/19/2002	20030415	NA
+ • DAY CARE CENTER				
PUP00856R1	APPROVED	06/11/2008	20090624	06/24/2011
RENEWTIME&EXPANSION OF EXISTING DAY CARE FACILITY				
PUP00856R2	APPROVED	01/09/2012	20121219	12/29/2014
ADD 2,596 SQ FT CARE TAKERS QUARTER,ADD 2,400SQ FT				
PUP0315	APPROVED	08/07/2000	19751031	11/01/1985
EXPANSION OF FAMILY CARE HOME				
? PUP0325	APPROVED	08/07/2000	0	NA
+ SP00341	APPROVED	04/21/2004	20051012	NA
FOR 6.2 MILLION SQ FT BUS PARK & LGT IND.				

Approved Cases as of 04/09/2015

CASE NAME	STATUS	APPLIED DATE	APPROVAL DATE	EXPIRED DATE
CASE DESCRIPTION				
TR23234	APPROVED	12/14/1987	19880607	06/07/2001
DIVIDE 44.55 ACRES INTO 170 SINGLE FAMILY RESIDENC				
TR23234M2	APPROVED	08/27/1996	19970429	06/07/2001
MC TO TR23234 TO RECONFIGURE STREETS AND LOTS				
TR30592	APPROVED	01/08/2003	20040225	02/25/2016
TO SUBDIVIDE 34 ACRES INTO 131 SFR LOTS				
TR30592M1	APPROVED	09/01/2005	20060208	02/25/2016
REMOVE TRANS COND. 50.TRANS.22 FOR ROW IMPROVEMNT non-traffic				

Charlene Hwang So

From: Cecilia So
Sent: Thursday, June 18, 2015 5:50 PM
To: Charlene Hwang So
Cc: CMS Administrator
Subject: FW: 09301: City of Perris Cumulative Developments
Attachments: Site Plan.pdf; Case Map Final.pdf

From: Diane Sbardellati [mailto:dsbardellati@cityofperris.org]
Sent: Monday, June 08, 2015 4:56 PM
To: Cecilia So
Subject: RE: 09301: City of Perris Cumulative Developments

Cecelia,

Sorry for the delay. There's been no updates to this map, unfortunately. I can tell you one of Urban Crossroads projects should be on it – the Integra Distribution Center. I've attached a site plan.

Diane Sbardellati, LEED AP
Associate Planner
City of Perris

(951) 943-5003

From: Cecilia So [mailto:ckso@urbanxroads.com]
Sent: Wednesday, June 03, 2015 4:47 PM
To: Cecilia So; Diane Sbardellati
Cc: Charlene Hwang So; CMS Administrator; Ilene Paik
Subject: RE: 09301: City of Perris Cumulative Developments

Hi Diane,

I wanted to make sure you were in receipt of my request for cumulative developments in the City of Perris. Could you please provide me with any updates that you may have at this time?

Thank you,

CECILIA SO
Assistant Analyst

41 Corporate Park, Suite 300
Irvine, CA 92606
(949) 336-5995 Direct
(949) 660-1994 Main
urbanxroads.com

From: Cecilia So
Sent: Monday, May 18, 2015 9:55 AM
To: 'dsbardellati@cityofperris.org'
Cc: Charlene Hwang So; CMS Administrator; 'ipaik@cityofperris.org'
Subject: 09301: City of Perris Cumulative Developments

Hi Diane,

Could you please review the attached map and list of cumulative developments in the City of Perris, and provide any updates that you may have? We have an upcoming project in the City of Moreno Valley that we will be starting soon and wanted to get an updated list of projects for inclusion in the traffic study. Thank you in advance.

CECILIA SO
Assistant Analyst

URBAN CROSSROADS

41 Corporate Park, Suite 300
Irvine, CA 92606
(949) 336-5995 Direct
(949) 660-1994 Main
urbanxroads.com

Charlene Hwang So

From: Cecilia So
Sent: Wednesday, June 03, 2015 4:23 PM
To: Bawany, Suhaim
Cc: Charlene Hwang So; CMS Administrator; Randel, Travis; Mustafa, Nathan; Eastman, Jay; Murray, David
Subject: RE: City of Riverside Cumulative Developments

Thank you Suhaim, you have been very helpful. Have a great day!

CECILIA SO
Assistant Analyst

41 Corporate Park, Suite 300
Irvine, CA 92606
(949) 336-5995 Direct
(949) 660-1994 Main
urbanxroads.com

From: Bawany, Suhaim [mailto:SBawany@riversideca.gov]
Sent: Tuesday, June 02, 2015 5:21 PM
To: Cecilia So
Cc: Charlene Hwang So; CMS Administrator; Randel, Travis; Mustafa, Nathan; Eastman, Jay; Murray, David
Subject: RE: City of Riverside Cumulative Developments

Hello Cecilia

The list we have is a comprehensive list of all projects and you can feel free to modify the excel sheet to fit your needs. In terms of projects without an approval date, it usually means they are still in the planning stages and have not been approved by either the Planning Commission or City Council.
And the projects highlighted in yellow, those are fairly new projects in the pipeline that have been presented to the Planning Commission or City Council from February until May 2015. Sorry for not clarifying earlier.

Hope this helps and have a nice day.

Thank you!

Suhaim M. Bawany
Planning Technician
City of Riverside | Planning Division
3900 Main Street | Third Floor | Riverside, CA
tel: (951) 826-5371 | fax: (951) 826-5981

From: Cecilia So [mailto:ckso@urbanxroads.com]
Sent: Tuesday, June 02, 2015 2:00 PM
To: Bawany, Suhaim
Cc: Charlene Hwang So; CMS Administrator; Randel, Travis; Mustafa, Nathan; Eastman, Jay; Murray, David
Subject: RE: City of Riverside Cumulative Developments

Hello Suhaim,

Would it be appropriate to remove projects with an approval date beyond 2 years (2013)? If so, what should we assume for projects without an approval date? Additionally, I was wondering if there was any significance for the items highlighted in yellow?

Thank you again for your help!

CECILIA SO
Assistant Analyst

41 Corporate Park, Suite 300
Irvine, CA 92606
(949) 336-5995 Direct
(949) 660-1994 Main
urbanxroads.com

From: Bawany, Suhaim [mailto:SBawany@riversideca.gov]
Sent: Monday, June 01, 2015 5:08 PM
To: Cecilia So
Cc: Charlene Hwang So; CMS Administrator; Randel, Travis; Mustafa, Nathan; Eastman, Jay; Murray, David
Subject: RE: City of Riverside Cumulative Developments

Hello Cecilia

All cases have been filtered into one tab labeled "**ALL**".
Unfortunately we haven't updated the Map associated with this list at this time. I will coordinate with Dave to update the Map.

Sorry for the inconvenience.

Suhaim M. Bawany
Planning Technician
City of Riverside | Planning Division
3900 Main Street | Third Floor | Riverside, CA
tel: (951) 826-5371 | fax: (951) 826-5981

From: Cecilia So [mailto:ckso@urbanxroads.com]
Sent: Monday, June 01, 2015 1:33 PM
To: Bawany, Suhaim
Cc: Charlene Hwang So; CMS Administrator; Randel, Travis; Mustafa, Nathan; Eastman, Jay; Murray, David
Subject: RE: City of Riverside Cumulative Developments

Hi Suhaim,

Thank you for the quick turnaround and your assistance. I was wondering if you could provide me with any guidance in regards to filtering through this comprehensive list (i.e., if there is a specific tab we should focus on, or if we can eliminate projects that were approved older than X amount of years). Additionally, I noticed that there is a column titled "Map ID #," could you send me the accompanying map to this list?

Thank you for your help!

CECILIA SO
Assistant Analyst

41 Corporate Park, Suite 300
Irvine, CA 92606
(949) 336-5995 Direct
(949) 660-1994 Main
urbanxroads.com

From: Bawany, Suhaim [mailto:SBawany@riversideca.gov]
Sent: Monday, June 01, 2015 1:25 PM
To: Cecilia So
Cc: Charlene Hwang So; CMS Administrator; Randel, Travis; Mustafa, Nathan; Eastman, Jay; Murray, David
Subject: RE: City of Riverside Cumulative Developments

Hello Cecilia

Here is the most updated Cumulative Projects List as of May 2015.

Thank you!

Suhaim M. Bawany
Planning Technician
City of Riverside | Planning Division
3900 Main Street | Third Floor | Riverside, CA
tel: (951) 826-5371 | fax: (951) 826-5981

From: Cecilia So [mailto:ckso@urbanxroads.com]
Sent: Monday, June 01, 2015 11:44 AM
To: Eastman, Jay; Murray, David
Cc: Charlene Hwang So; CMS Administrator; Bawany, Suhaim; Randel, Travis; Mustafa, Nathan
Subject: RE: City of Riverside Cumulative Developments

Hi Jay,

That's no problem. Thank you for the information!

CECILIA SO
Assistant Analyst

41 Corporate Park, Suite 300
Irvine, CA 92606
(949) 336-5995 Direct
(949) 660-1994 Main
urbanxroads.com

From: Eastman, Jay [mailto:JEastman@riversideca.gov]
Sent: Monday, June 01, 2015 11:40 AM
To: Cecilia So; Murray, David
Cc: Charlene Hwang So; CMS Administrator; Bawany, Suhaim; Randel, Travis; Mustafa, Nathan
Subject: RE: City of Riverside Cumulative Developments

Cecila,

To provide a bit of clarification, a cumulative list was created last week, and was reviewed late Friday by the Principal Planner who leads the Current Planning Projects Team. Dave will get you the list as soon as possible.

Jay S. Eastman, AICP
Interim City Planner
Planning Division
Community & Economic Development Department
City of Riverside
E: jeastman@riversideca.gov
O: (951) 826-5264
F: (951) 826-5981

From: Cecilia So [mailto:ckso@urbanxroads.com]
Sent: Monday, June 01, 2015 11:27 AM
To: Murray, David
Cc: Eastman, Jay; Charlene Hwang So; CMS Administrator; Bawany, Suhaim; Randel, Travis
Subject: RE: City of Riverside Cumulative Developments

Hi Dave,

I wanted to follow up regarding the status of obtaining an updated cumulative list. Could you please provide me with any updates you may have?

Thank you for your help!

CECILIA SO
Assistant Analyst

41 Corporate Park, Suite 300
Irvine, CA 92606
(949) 336-5995 Direct
(949) 660-1994 Main
urbanxroads.com

From: Cecilia So
Sent: Wednesday, May 20, 2015 12:28 PM
To: 'Murray, David'
Cc: Eastman, Jay; Charlene Hwang So; CMS Administrator; Bawany, Suhaim; Randel, Travis
Subject: RE: City of Riverside Cumulative Developments

Hi Dave,

Thanks for your prompt response. We're estimating that we will need the cumulative development information by the end of next week (05/29), at the latest in order to meet our deadlines. Please let me know if this date is possible for you. Thank you for your help.

CECILIA SO
Assistant Analyst

41 Corporate Park, Suite 300
Irvine, CA 92606
(949) 336-5995 Direct
(949) 660-1994 Main
urbanxroads.com

From: Murray, David [mailto:DMurray@riversideca.gov]
Sent: Wednesday, May 20, 2015 12:21 PM
To: Cecilia So
Cc: Eastman, Jay; Charlene Hwang So; CMS Administrator; Bawany, Suhaim; Randel, Travis
Subject: RE: City of Riverside Cumulative Developments

Cecilia,
We will take a look at any projects that may have been entitled since we last provided a cumulative list in February. I am copying our Planning Technician, Suhaim Bawany. He compiled the previous list for you and will likely provide assistance on this request. Do you have a target date you would like this data?

Thanks,
Dave

David Murray, Senior Planner
City of Riverside | Community Development Department | Planning Division
3900 Main Street, Third Floor | Riverside, CA 92522
(951) 826-5773
dmurray@riversideca.gov

Riverside
RECONNECTS
STREETCAR STUDY

From: Cecilia So [mailto:ckso@urbanxroads.com]
Sent: Monday, May 18, 2015 9:41 AM
To: Murray, David
Cc: Eastman, Jay; Charlene Hwang So; CMS Administrator
Subject: City of Riverside Cumulative Developments

Hi Dave,

Could you please review the attached map and list of cumulative developments in the City of Riverside, and provide any updates that you may have? We have an upcoming project in the City of Moreno Valley that we will be starting soon and wanted to get an updated list of projects for inclusion in the traffic study. Thank you in advance.

CECILIA SO
Assistant Analyst

URBAN CROSSROADS

41 Corporate Park, Suite 300
Irvine, CA 92606
(949) 336-5995 Direct
(949) 660-1994 Main
urbanxroads.com

Conditional Use Permits

Map ID #	Case Number	Location	Project Description	Acres	Buildings Total Square Feet	Dwelling Units	Approval Date
C1	P07-1161	2111 Iowa St	Conditional use permit to establish an indoor rock climbing facility in an existing industrial building	2.80	5,580	-	CC 1/15/08
C2	P07-1181 P07-0593	381 Alessandro Blvd	Revised Conditional Use Permit, Design Review for Auto Parts Store	1.17	1,500	-	CC 5/6/08
C3	P06-0028 P06-0029 P06-0031	3520 Market St	CUP/DR/TM34945; Fox Plaza Mixed Use Development, Up to 205 Condos, restaurant, retail space, 125 unit Hyatt Place Hotel	1.90	31,600	205	CC 6/10/08
C4	P08-0201 P08-0202	1054 N. Orange St	Conditional use permit and design review of plot plan for Senior Apartment Complex	0.77	-	23	CC 6/17/08
C5	P08-0274 P08-0275	2570 Canyon Springs Pkwy	Conditional Use Permit, Design Review for Commercial Bank w/Drive-thru	0.14	2,746	-	CC 9/9/08
C6	P08-0407	19743 Luren Ave	Conditional use permit to allow the construction of a children's daycare center	3.85	10,000	-	CC 11/4/08
C7	P08-0491 P08-0948	1690 Spruce St	Conditional Use Permit to allow entertainment within an existing 7,004 square foot building located in the Business Manufacturing Park in the Hunter Business Park Specific Plan	-	7,004 (existing bldg)	-	CC 2/17/09
C8	P08-0980 P09-0095	3549 Iowa Ave	Revised Conditional Use Permit to allow double-bedroom occupancy and to increase the number of student beds from 760 up to 874 at an existing student housing establishment	11.70	-	-	CC 4/28/09
C9	P08-0960 P09-0025	1360 University Ave	Revised Conditional Use Permit, Design Review to convert existing ground floor retail space into 8 new student housing units (24 bedrooms), allow double-bedroom occupancy, and increase the number of overall student beds from 528 up to 635 beds	5.00	11,459	8	CC 5/12/09
C10	P09-0147	7840 Indiana Ave	Conditional use permit; Car & tire sales, auto body repair & painting	0.86	12,510 (existing bldg)	-	CC 6/9/09
C11	P09-0142	NE corner of Jurupa and Payton Aves	Conditional Use Permit to allow for the development of a surface vehicular storage lot	4.22	-	-	CC 6/23/09
C12	P09-0125	3500 Iowa Ave	Revised Conditional Use Permit to allow double-bedroom occupancy and to increase the number of student beds from 525 to 548 in existing student housing	1.70	-	-	CC 7/28/09
C13	P09-0185	7590-94 Indiana Ave	Conditional use permit; Drive-thru restaurant	0.90	280 (existing bldg)	-	CC 8/11/09
C14	P09-0207 P09-0209 P09-0210	2624 E. Alessandro Blvd	CUP, PM36205, DR Arco Car Wash	1.88	42 ft. long wash tunnel with 100 ft stacking lane	-	CC 10/20/09
C15	P09-0612	1737 Atlanta Ave	Conditional Use Permit to establish an adult day care/work skills learning facility for up to 39 developmentally disabled adults	7.60	3,900 (lease space in existing 41,000 sq.ft. building)	-	CC 12/15/09
C16	P08-0301	6115 Arlington Ave	Conditional use permit; Harvest Christian Fellowship; 450-stall parking Lot	5.38	-	-	ZA 1/27/10
C17	P09-0530 P09-0531	1821 – 1855 Third St	Conditional Use Permit, Design Review for the temporary storage of buses for RTA	2.60	-	-	CC 2/2/10
C18	P09-0582 P09-0583	150 Palmyrita Ave	Conditional Use Permit, Design Review for the establishment of a Sandals Church within an existing building	7.50	95,654 (existing bldg)	-	CC 1/5/10

Conditional Use Permits

	Map ID #	Case Number	Location	Project Description	Acres	Buildings Total Square Feet	Dwelling Units	Approval Date
R20	C19	P09-0717 P09-0718	807 Blaine St	Site Plan Review; Apartment complex	2.00	5,490	55	CC 4/6/10
R21	C20	P09-0808 P08-0809	2340 Fourteenth St	Conditional Use Permit to allow the development of a 4-story, 134 bed senior housing complex	2.87	101,974 (existing bldg)	121	CC 6/14/11
	C21	P09-0811	7170-72 Indiana Ave	Conditional use permit; Veterinary clinic	0.45	4,402	-	CC 5/4/10
R6	C22	P09-0835 P10-0002	3372 University Av	Conditional Use Permit and Certificate of Appropriateness to allow the establishment of an approximately 94-foot tall, 6-story office building with a four-story subterranean parking structure containing 453 parking spaces in the Downtown Specific Plan-Raincross District	0.82	132,136	-	CC 4/27/10
R22	C23	P10-0083	10938 Magnolia Ave	Conditional Use Permit, Initial Study; Walgreens	2.92	14,064	-	CC 7/13/10
R23	C24	P10-0090 P10-0091	6287 Day St	Conditional Use Permit, Design Review; Arco, new Gas Canopy and repainting of building fueling station and add 2 additional multi-product fuel pumps	0.91	2,700	-	CC 6/8/10
	C25	P10-0095 P10-0168 P10-0171	3050 Chicago Ave	Conditional Use Permit, Rezoning, Design Review for charter school for approximately 250 students from grades K-8; Rezone from BMP to O	1.85	15,685	-	CC 7/27/10
	C26	P12-0248	7500 Jurupa Ave	Time extension of conditional use permit (P10-0128) to establish a building materials supply store with wholesale ancillary retail sales within a previously approved 36,822 square foot industrial building	6.59	36,822	-	ZA 5/25/12
	C27	P10-0366 P10-0368	3501 Adams St	Rezoning property from Office to Commercial Retail; Conditional Use Permit to allow Check Cashing facility	0.50	3,176 (lease space in existing bldg)	-	CC 7/13/10
	C28	P10-0219	4183 Fairgrounds St	Conditional use permit; establish a church with 180 fixed seats within an existing 10,312 square foot industrial building	0.81	10,312 (existing bldg)	-	CC 7/13/10
	C29	P10-0259 P10-0270	6686 Indiana Ave	Conditional Use Permit, Design Review; Baker's drive-thru restaurant	0.65	2,234	-	CC 7/27/10
	C30	P10-0380	1820 - 1860 University Ave	Conditional Use Permit allow the establishment of a vocational school for approximately 150 students within an existing 29,870 square foot building in the University Avenue Specific Plan	3.31	29,870	-	CC 10/12/10
R8	C31	P10-0511	4500 Riverwalk Pkwy	Conditional Use Permit; La Sierra University School of Business building	30.44	68,573	-	ZA 11/1/10
	C32	P10-0557 P10-0559	6365 Valley Springs Pkwy	Conditional Use Permit, Design Review for construction of Navy Federal Credit Union	1.68	3,500	-	CC 1/11/11
	C33	P09-0731 P10-0567 P10-0568	1715 – 1745 University Ave	Amendment to the University Avenue Specific Plan to allow drive-thrus in conjunction with retail pharmacies in Subarea 1; CUP/DR for a Walgreens.	0.8	15,004	-	CC 2/8/11
	C34	P10-0506 P10-0507 P10-0508 P10-0509	3020 Iowa Ave; northeast corner of Iowa Ave and Blaine St	Conditional Use Permit, Rezoning, Lot Line Consolidation, Variance; student housing project with 216 one, two and four bedroom units with a total of 614 beds within three four-story buildings; Rezone from R-1-7000 to R-3-1500	8.10	-	216	CC 2/22/11
	C35	P10-0733	2059 Atlanta Ave	Conditional Use Permit to establish a church with 598 fixed seats within an existing building	3.52	52,000 (existing bldg)	-	CC 3/8/11

Conditional Use Permits

Map ID #	Case Number	Location	Project Description	Acres	Buildings Total Square Feet	Dwelling Units	Approval Date
C36	P09-0419 P10-0476	2278 Main St	Conditional Use Permit, Design Review; Redesign of site with a Gas Station & Car Wash; Request includes off sale of beer & wine	0.77	3,100	-	CC 3/8/11
C37	P10-0715	7701 Indiana Ave	Conditional use permit; Vehicle repair facility	0.70	4,085	-	CC 4/5/11
C38	P11-0014 P11-0015	8432 Magnolia Ave	Conditional use permit and design review for California Baptist University to facilitate the construction of a 42 1/2 foot tall, 2-story building (School of Business) in the Magnolia Ave Specific Plan	1.24	56,717	-	CC 4/26/11
C39	P10-0685 P10-0794	1855 Columbia Ave	Conditional Use Permit, Design Review for an automated vehicle wash facility, new fuel pump, overhead canopy structure and façade improvements to an existing convenience store	0.63	1,014	-	CC 5/24/11
C40	P10-0707 P10-0708	North side Van Buren Blvd, 200 ft West of Wood St	Conditional Use Permit, Design Review for construction of Baker's Drive-Thru	1.17	2,361	-	CC 5/24/11
C41	P11-0018	8537 Magnolia Ave	Conditional Use Permit to convert an existing independent senior housing complex to an assisted living facility for seniors within Magnolia Avenue Specific Plan	2.36	-	98	CC 6/14/11
C42	P11-0087 P11-0088	3520 Adams St	Conditional Use Permit and Design Review for California Baptist University to facilitate the first phase renovation of the existing Adams (Lancer) Plaza for the construction of 2-story, 48 foot tall Student Recreation Center toward the rear (west) portion of the complex in the Magnolia Avenue Specific Plan	7.24	62,463	-	CC 6/14/11
C43	P11-0131 P11-0132	8432 Magnolia Ave	Conditional use permit and Certificate of Appropriateness for California Baptist University to construct a single-story building for expansion of the existing Central Energy Plant and relocation of the CBU Ceramics and Sculpture Studio in the Magnolia Avenue Specific Plan; project is in close proximity to historic James Complex and Harden Square	-	5,745	-	CC 7/12/11
C44	P11-0192 P11-0196	3747 Monroe Ave	Conditional use permit and Certificate of Appropriateness for California Baptist University to construct a new 317-space parking lot and associated improvements. In addition, design improvement to the Hawthorne House and the surrounding landscape. Project site is located in the Magnolia Avenue Specific Plan Overlay Zones	4.02	-	-	CC 8/9/11
C45	P11-0082	711 N. Main St	Conditional Use Permit to legalize an existing vehicle impound yard and offices on a site developed with two single-story office buildings and a predominantly unpaved surface parking lot	0.99	7,737 (existing bldgs)	-	CC 10/18/11
C46	P11-0545	1540 Linden St	Conditional use permit to allow the establishment of a church with 80 fixed seats within an existing building	0.64	11,346 (existing bldg)	-	CC 11/1/11

R-3
R-4
R-9
R-3
R-3
R-3

4.1-32

	Map ID #	Case Number	Location	Project Description	Acres	Buildings Total Square Feet	Dwelling Units	Approval Date
	C47	P11-0460	1044 East La Cadena Dr	Conditional use permit to legalize and expand an adult day care/work skills learning facility for up to 90 developmentally disable adults and 30 staff members within an existing building	1.20	8,562 (existing bldg)	-	CC 12/6/11
R-9	C48	P11-0623 P11-0713	10121 Hole Ave	Conditional use permit to convert existing retail space into new fitness facility in the Magnolia Avenue Specific Plan	1.45	15,362	-	CC 2/7/12
R-25	C49	P12-0234	3439 Arlington Ave	Design Review; LA Fitness ~9,600 square foot expansion to an existing ~42,000 square foot health and fitness club	5.50	~51,6000	-	ZA 05/31/12
R-8	C50	P12-0019 P12-0156 P12-0158	NW cor Riverwalk Parkway and Flat Rock Dr	Conditional Use Permit, Specific Plan Amendment, and Design Review of plot plan and building elevations to facilitate the construction of a vehicle fuel station and wash facility as a 2,400 square foot convenience store and a 3,946 square foot coffee shop in the Commercial Retail La Sierra University Specific Plan Overlay Zone	1.17	6,346	-	CC 9/4/12
R-27	C51	P10-0438	3875 Dawes St	DR; Magnolia Garden Condominiums	3.61	-	62	ZA 9/21/12
R-28	C52	P12-0266 P12-0267 P12-0268	5938 - 5944 Grand Ave	Conditional Use Permit and Design Review for a 2-story senior housing facility with associated parking, on two vacant parcels approximately 1.4 acres	1.40	-	37	CC 10/9/12
R-10	C53	P12-0351	3550 Vine St	Conditional Use Permit to allow the establishment of a vocational/technical school for a maximum of 252 students at any one time within an existing 40,060 square foot 3-story office building in the Marketplace Specific Plan	2.60	10,000 of 2nd floor of existing bldg	-	CC 10/9/12
R-29	C54	P11-0627 P11-0628 P11-0777 P11-0778	4901 La Sierra Ave	CUP, DR, LL, RZ; Service Station and Convenience Store at 5-Points	1.01	4,100	-	CC 10/9/12
R-1	C55	P12-0360	2100 Alessandro Blvd	Conditional Use Permit to establish a vocational school on a site currently developed with an approximately 11,505 square foot single-story retail building in the Sycamore Canyon Business Park Specific Plan	2.15	11,505 (existing bldg)	-	CPC 12/6/12
R-6	C56	P11-0329 P11-0330 P11-0332	1101-1163 Marlborough Ave and 3960 11th St	Conditional use permit, variance and design review for a new passenger train station platform and parking lot for Metrolink Service expansion along with existing SBJL right of way. This is within the Business Manufacturing Park (1101-1163 Marlborough Ave) and Downtown Specific Plan Almond Street District (3960 11th St)	9.56	-	-	CC 12/11/12
R-3	C57	P12-0520 P12-0524	3580 Adams St	Conditional use permit; California Baptist University student services complex; rehabilitate existing retail space		36,266	-	CC 1/8/13
R-30	C58	P12-0605 P12-0606	4250 Van Buren Blvd	Conditional Use Permit and Design Review, to allow the expansion of a vehicle fuel station consisting of construction of second set of pumps and 1,776 sq.ft. canopy at existing "Food 4 Less" supermarket	7.45	-	-	CC 4/9/13

	Map ID #	Case Number	Location	Project Description	Acres	Buildings Total Square Feet	Dwelling Units	Approval Date
R-31	C59	P12-0419 P12-0557 P12-0558 P12-0559	360 Alessandro Blvd	Conditional Use Permit and Design Review to allow the establishment of a stand-alone financial institution; General Plan Amendment to change property from MDR to C; Rezoning from Residential Estate to Office	0.84	3,858	-	CC 5/7/13
R-32	C60	P12-0761 P12-0442 P12-0443 P12-0444	2831 Mary St	Conditional Use Permit to allow the development of a CVS drug store that coincides with Stater Bros redevelopment project (Conditional Use Permit, Rezoning, and Design Review)	6.30	56,101	-	CC 5/14/13
	C61	P12-0742	6825 - 6900 Jurupa Ave	Conditional Use Permit; Riverside Auto Auction; Vehicle Storage Yard, Minor Vehicle repair and inspections within an existing office/industrial building where the outdoor storage of wholesale vehicles has been previously approved (P10-0282, CC Approved 10/19/10)	27.71	56,000 (existing bldg)	-	CC 6/11/13
	C62	P13-0060	5160 Arlington Ave	Conditional Use Permit request on behalf of Chase Bank to allow an existing one drive-thru lane on an existing 4576.87 square foot building to be demolished and reconstructed to include a two lane 36-foot drive thru lane for business purposes	6.26	4,576.87 (existing bldg)	-	CC 6/25/13
R-6	C63	P13-0087 P13-0262	2450 Market St	CUP/DR; Conditional Use Permit to allow the reuse of a Senior assisted living facility to allow it to become a low-income single family apartment complex in the Downtown Specific Plan-Market Street Gateway District	1.42	Existing 16,730 sq.ft.complex	77	CPC 8/8/13
R-34	C64	P13-0432	6091 Victoria Ave	Conditional Use Permit to construct and operate a day care center at a church facility in a residential & cultural resources zone	3.40	1,831 (existing bldg)	-	CC 9/24/13
	C65	P13-0470	8223 California Ave	Conditional Use Permit to re-establish a church and private school; originally approved in 1950s and revised in 1981	5.20	-	-	CC 11/5/13
R-35	C66	P13-0159 P13-0160	6692 Indiana Ave	CUP, DR; Proposal to construct new 7-Eleven vehicle fuel station to operate 24 hours within a commercial retail zone	0.75	2,958	-	CC 12/3/13
R-36	C67	P13-0181 P13-0182	4824 Jones Ave	CUP, DR; Requesting the expansion of an existing building with 23,124 square foot building for an assembly of people within the Rural Residential zone.	6.14	Existing 33,542 square feet, proposed expansion 23,124 square feet	-	CC 12/17/13
	C68	P10-0212 P10-0213	2069 Massachusetts Ave	CUP, DR; Proposal to legalize a bus storage yard for 180 school buses	4.38	-	-	CC 12/17/13
R-37	C69	P13-0650 P13-0651	2586 University Ave	MCUP and Certificate of Appropriateness; Proposal to convert an existing 2500 sqft 2-story residence to a bed and breakfast with an 1118 sqft addition	0.23	3,650	-	ZA 12/19/13; CHB 12/18/13
R-38	C70	P08-0402 P13-0822	18580 Van Buren Blvd	Conditional use permit to allow the construction of a one-story minor automobile repair shop; Modification of conditions to extend hours	0.93	8,142	-	Original CUP - CC 11/4/08; Modifications of conditions - CC 1/7/14
R-39	C71	P13-0785 P13-0787	4247 Van Buren Blvd	CUP, DR; Expansion of existing church	3.43	12,166	-	CC 2/25/14
	C72	P13-0989	1200 Columbia Ave	CUP; Assemblies of People church and conference center within existing 64,910 sqft bldg		Existing 64,910		CC 3/11/14
	C73	P13-0364 P13-0365	3399 Adams St	CUP, DR; Gas station, convenience store, car wash	0.51	2,941		CC 4/22/14

	Map ID #	Case Number	Location	Project Description	Acres	Buildings Total Square Feet	Dwelling Units	Approval Date
	C74	P14-0435	5005 Canyon Crest Dr	MCUP; Temporary use of 2 modular buildings for offices; Saint Andrew's Orthodox Church				ZA 5/22/14
R-66	C75	P13-0912 P13-0913	3742 Park Sierra Av	CUP, DR; LA Fitness Sports Club facility		45,000	-	CC 6/17/14
	C76	P14-0220	4035 Trail Creek Rd	CUP; Allow occupancy of an existing 4,400 sqft industrial building for use as Sunday school classrooms and offices	-	Existing 4,400 sqft bldg	-	CC 6/17/14
	C77	P13-0903 P13-0904	3865 Jackson St	CUP, DR; 18,650 sqft expansion of existing medical emergency department and construction of a 2,005 sqft utility building; Parkview Hospital Medical Center		20,655		6/19/2014
R-72	C78	P14-0457	6465 Sycamore Canyon Blvd	MCUP; Health & fitness club/studio under 4,000 sqft within existing 92,410 sqft 2-story office bldg	8.02			ZA 6/30/14
	C79	P14-0132	7665 Vine St	CUP; Allow a materials (metal) processing facility to operate	2.25	2 existing bldgs, 30,324 sqft total	-	CC 7/8/14
	C80	P14-0188 P14-0403	3390 Orange St	MCUP, COA; Use residential building as offices	0.21			ZA 7/21/14
	C81	P14-0315 P14-0437	4334 Vine St	Revised CUP, DR; Security operations building for the adjacent Downtown Metrolink station		3,150 sqft		CPC 7/17/14
R-3	C82	P14-0450	2900 Adams St	Revised CUP; to establish classrooms and laboratories within 5 office and warehouse lease spaces; California Baptist University	9.78	9085 sqft		CPC 7/17/14
	C83	P13-0967 P13-0968	NE cor Indiana & La Sierra Aves	CUP, DR; Gas station, car wash, detail center		7065 sqft		CPC 8/7/14
	C84	P13-0165 P13-0166 P13-0167 P13-0168	Westerly side of La Sierra Ave, southerly of Indiana Ave, northerly of Liverpool Ln	CUP, DR, GPA, RZ; Request to construct a new gas station and car wash; GPA from Office to Commercial; Rezone from Single Family Residential to Commercial	6.83	-	-	CC 8/12/14
R-3	C85	P14-0525	3622 Adams St	MCUP; Convert apartments into student housing for California Baptist University				CC 10/09/14
	C86	P14-0501 P14-0529 P14-0530	northwest corner of intersection of La Sierra Ave and Pierce Street	CUP, DR; Drive-thru fast food restaurant, Pharmacy Drive-thru, Commercial shopping center	5.21			CC 1/13/15
	C87	P14-0673 P14-0675 P14-0928	northeast corner of Van Buren and Magnolia	CUP, LC, PC or N; Walgreens with Drive Thru pharmacy	0.73	10,776		CC 2/03/15
	C88	P14-0812 P14-0813 P14-0979 P14-0980 P14-0981 P14-0982 P14-0983 P14-1076	9505 Magnolia	CUP, VA, DR; Sonic Dine in and Drive-Thru; VA for landscaping, Interior side landscape planter, minimum lot size, reduce drive-thru width, increase number of signs allowed, corner blade sign, reduce parking spaces.		3,275		CC 2/03/15

Conditional Use Permits

Map ID #	Case Number	Location	Project Description	Acres	Buildings Total Square Feet	Dwelling Units	Approval Date
C91	P14-0536 P14-0537	Valley Springs & Corporate Centre	CUP, DR; construct an approximately 3,750-square-foot drive-thru business ("Steak and Shake"), located at the northwesterly corner of Valley Springs Parkway and Corporate Centre Place, APN 291-460-017		3,750		CC 5/5/15
C92	P13-0087 P13-0262	2450 Market Street	CUP, DR; establish a 67-unit senior housing facility within an existing three-story, approximately 51,321-square-foot building, on an approximately 1.7-acre site, located at 2450 Market Street situated on the easterly side of Market Street between Ogden Way and Northbend Street, across from Fairmount Park	1.7	51,321		CC 5/5/15
C97	P15-0247 P15-0248 P15-0250 P15-0251 P15-0252 P15-0363	3744, 3768 and 3776 Main Street	CUP, TM, VR; construction of a mixed-use project, consisting of 91 residential units, approximately 8,841 square feet of commercial space and a 115-stall parking garage, on three parcels totaling 0.62 acres, partially developed with an existing commercial building (Imperial Hardware) and a surface parking lot	1.49			
C98	P15-0155	4135 Chicago Avenue	CUP; Open a charter high school in a 10,000 square foot square site				
M1	P05-1055 P05-1056 P05-1057 P05-1058 P05-1059	5202 La Sierra Ave	Tract Map 33403, PRD, GPA, RZ, DR; Sierra Park, 62 unit	7.50	-	62	CC 7/11/06
M2	P06-0501 P06-0554 P06-0555 P06-0056 P06-0557	4710 Riverwalk Pkwy	Parcel Map 34774, SP, RZ, DR, PP; Griffin Riverwalk Apartments	25.50	-	664	CC 10/3/06
M3	P06-1031	1562 Orange St	Tract Map 31825 time extension; Single Family Residences	2.08	-	7	CPC 10/5/06
M4	P06-0900 P08-0269 P08-0270	southwest corner of Lurin Av and Wood Rd	Tract Map 32301; Single Family Residences	10.50	-	20	CPC 4/19/07
M5	P07-0279	north of California Av, west of Bolton Av	TM35455 (RC Zone), Single family residential lots; Lionhead , RC Map	25.94	-	6	CC 5/27/08
M6	P07-1073	APN: 276060003, 012	Tract Map 32180; Subdivide 2 parcels into 9 Single Family Residences in the RE-RL Zone	9.62	-	9	CPC 6/5/08
M7	P08-0084	8616 California Ave	Parcel Map 35852; California Square Redevelopment (Condos)	6.00	-	21	CC 6/17/08
M8	P06-1355	APN: 266160006, 008, 017, 018	Tract Map 33480; Single Family Residences	21.14	-	32	CPC 7/3/08
M9	P06-1396	APN: 266140029, 030	Tract Map 33481; Single Family Residences	18.78	-	25	CPC 7/3/08
M10	P06-1404	APN: 266140002, 021, 022	Tract Map 33482; Single Family Residences	15.13	-	29	CPC 7/3/08

R-23
R-33
R-40
R-73
R-41
R-42
R-43
R-44

4.1-36

Conditional Use Permits

	Map ID #	Case Number	Location	Project Description	Acres	Buildings Total Square Feet	Dwelling Units	Approval Date
R-45	M11	P05-0269 P08-0416	3719 Strong St	Tract Map 33550 and Rezoning of vacant parcels to establish 9 single family residential lots and rezone the property from Multiple Family Residential to Single Family Residential Zone	2.01	-	9	CC 9/16/08
R-46	M12	P06-0782	1006 and 1008 Clark St, north side of Paschels Way, east of Clark St, at the north terminus of Cozumel Ct	Tract Map 34908; single family residences	3.38	-	15	CC 1/6/09
R-47	M13	P05-1528 P09-0087	East of Gratton St, West of Corsica Ave, North of Van Buren Blvd	Tract Map 34509; 50 Single family lots; Phase I - Develop approx 60 acres to 11 subdivision lots	254.34	-	50	CC 11/06/07; CPC 4/23/09 (Phase I)
R-73	M14	P09-0141 P09-0173	South of Clarke St, west of Crystal View Terrace	Parcel Map 34583 to subdivide 2 vacant parcels into 3 single family residential lots; Rezoning 0.47 acres from R-1-1/2 to Residential Conservation Zone	5.72	-	3	CC 9/1/09
R-48	M15	P08-0396 P08-0397 P08-0398 P08-0399	NW corner of Dominion Av and Division St	Tract Map 35620; Design Review, General Plan Amendment, and Rezoning to establish a condominium complex	3.75	-	36	CC 11/10/09
R-1	M16	P07-1028 P06-0416 P06-0418 P06-0419 P06-0421 P07-0102	NW cor Alessandro Blvd & San Gorgonio Dr	TM 34707/EIR/ DR Alessandro Business Park 4 Industrial/Manufacturing Bldgs	36.63/80.07	662,018	-	CC 3/9/10; Final map approval CC 5/20/14
R-49	M17	P08-0727	6639 Hillside Ave	Parcel Map 35901; 5 lots for future industrial development	9.00	-	5	CPC 11/18/10
	M18	P10-0577 P10-0671 P10-0672 P10-0798	La Sierra and Indiana Av	Riverwalk Vista Specific Plan - Village 4 (cross streets La Sierra and Indiana Avenue); Amend the Riverwalk Vista Specific Plan to allow two additional complexes (villages) to be developed. Tract Map 35932 to subdivide 21.89 acres of vacant land into 111 lots; additional Tract Map 36323 to subdivide 11.72 acres of vacant land into 52 lots located with the Single Family Residential Zone and Specific Plan (Riverwalk Vista) Overlay Zones	33.61	-	163	CC 2/22/11; Final map approvals CC 3/25/14
R-50	M19	P10-0113 P10-0118 P10-0449	19985 Van Buren Blvd; SW corner of Van Buren Blvd and Barton St	Parcel Map 36434 Scoping Session, EIR, DR; Gless Ranch - commercial retail shopping	40.00	425,447	-	CC 2/21/12
R-51	M20	P12-0021 P12-0022 P12-0074	3990 Reynolds Rd	Parcel Map 36442; General Plan Amendment to change property from C to MHDR; Rezoning from CR-SP and O-S-R-SP to R-3-3000-SP to consider the establishment of a 4-story multi-family residential development	9.7	-	102	CC 6/5/12

Map ID #	Case Number	Location	Project Description	Acres	Buildings Total Square Feet	Dwelling Units	Approval Date
M21	P11-0675 P11-0676	South of Arlington; between Royale Pl and Sunset Ranch Dr	Tract Map 36377 and PRD; 10 lot subdivision	13.9	-	10	CC 6/11/13
M22	P13-0389	NE cor Martha Way & Everest Ave	Tract Map 36579; subdivide 2 parcels to accommodate 5 single family dwellings	1.36	-	5	CPC 1/9/14
M23	P13-0723 P13-0724 P13-0725	4325, 4335, 4345, 4355, 4375 Adams St	Tract Map 36654, PRD, DR; subdivide 7.76 acres into 62 single family planned residential development	7.76	-	62	CC 2/25/14
M24	P12-0799 P12-0800	west side of Palm Av between Beechwood & Highland Pl	Tract Map 36516 and Design Review; subdivide 1.26 ac vacant parcel into 7 single family residential lots ranging in size from 7,002 to 8,011 sq.ft.	1.26	-	7	CPC 4/3/14
M25	TM 31147	North of intersection of Wycliffe & Buchanan Streets	Final approval of Tract Map 31147; 59 lot single family subdivision	27.09	-	59	CC 4/15/14
M26	P13-0665	18875 Moss Rd	Tract Map 36641; 8 lot subdivision for future development of single family residences	5.03	-	8	CPC 4/17/14
M27	P12-0601 P12-0697 P12-0698	14601 Dauchy Ave	Tract Map 36370; GPA from VLDR to HR; RZ from R-1-1/2 acre to RC; 10 lot subdivision	9		10	4/17/2014
M28	TM32997	SE cor Alta Crest Ave & Krameria St	Final approval of Tract Map 32997 (P06-0715), a 90 lot single family subdivision	38.6		94	CC 5/20/14
M29	P03-0041 P03-0042 P03-0086	both sides of Jurupa Ave bet. Crest & Rutland Aves	Tract Map 28987, GPA, RZ; Final approval of tract map; 113 lot single family subdivision	47.54		113	CC 6/17/14
M30	P14-0593	APN 135280041	Tract Map 34236, DR; 7 lot subdivision for residential			7	11/12/2014
M31	P14-0176	southwest corner of La Sierra and Victoria Avenues	Tract Map 36713, GPA, RZ; Final approval of tract map; 14 lot single family subdivision	8.8		14	CPC 12/18/14
M32	P13-0905 P13-0906	Northerly side of Arlington Avenue, between Royale Place and Hawarden Drive	Tract Map 36604, PRD; subdivide an existing 12.41 acre parcel having an average natural slope of 26.4% into seven lots for the future construction of single family residences, as well as the establishment of an approximately 5.20 acre open space area, four lettered lots, and a public cul-de-sac street; resulting in a density of 0.56 dwellings per acre in the RC – Residential Conversation zone	12.41		.56/acre	
M33	P12-0393 P12-0394	Easterly side of Hawarden Drive, mid-block between Horace Street and Rolling Ridge Road	Parcel Map; subdivide an approximately 14.63 acre, two-parcel site into three parcels ranging in size from 1.02 to 11.61 acres; a variance for a flag lot, parcel 2, and to allow the existing parcel, located at 6260 Hawarden Drive, to increase from 0.63 acres to 1.02 acres in size, where the Hawarden Drive Special Design Area requires a minimum of 2.0 acres, located at 6240 and 6260 Hawarden Drive, in the RC – Residential Conservation Zone	14.63			

R-52
R-53
R-73
4.1-38

Map ID #	Case Number	Location	Project Description	Acres	Buildings Total Square Feet	Dwelling Units	Approval Date
M34	P14-1053 P14-1054	Northerly side of Dan Kipper Drive, westerly of the intersection of Dan Kipper Drive and Sycamore Canyon Boulevard	Parcel Map;subdivide three existing parcels, totaling 13.08 acres into 5 lots to facilitate the development of 5 warehouse buildings ranging in size from 36,424 to 53,006 square feet in size.	13.08			
M35	P14-0472 P14-0473 P15-0322 P15-0321	Northerly side of Grove Community Drive, between Trautwein Road and Worchester Lane	TM DR, VR; Tentative Tract Map (TM-39534); a related Planned Residential Development to subdivide an approximately 13.5 acre two-parcel vacant site, into 85 single family residential lots with common open space and shared amenities; the Design Review of the plot plan and building elevations for the proposed residential planned residential development; and variances related to building setback measurements in the R-1-8500-SP – Single Family Residential and Specific Plan (Orangecrest) Overlay Zones.	13.5			
G1	P08-0300	7179 Magnolia Ave	Rezoning property from R-1-7000 to Office	0.41			CC 7/22/08
R-9 G2	P07-0425 P09-0196	Magnolia Ave bet Tyler and Buchanan Sts	Magnolia Avenue Specific Plan; General Plan Amendment involving a text change to the Circulation Element of the general plan increasing Magnolia Avenue from a four lane arterial to a six lane arterial between Tyler Street and Buchanan Street				CC 11/10/09
G3	P08-0125 P07-0790	5372-5392 and 5360 Tyler St	General Plan Amendment from Semi-Rural Residential to Public Facilities Institutional; Rezoning from R-3-1500 to Public Facilities; Elementary School Expansion	2.14	Contact School District		CC 1/27/09
G4	P08-0215 P08-0216	10035-10266 Gould St	General Plan Amendment to change approx 54 parcels from HDR to MDR; Rezoning of approximately 54 parcels developed with single and multiple family residences and two vacant parcels from R-3-1500 to R-1-7000-AP-D	21.40			CC 1/27/09
G5	P08-0823	3345 Madison	Rezoning from Single Family Residential to Commercial Retail	0.50			CC 2/24/09
G6	P09-0749	NW Alamo and Main Sts	Rezoning 41 parcels from Business Manufacturing Park to Industrial	54.22			CC 3/9/10
G7	P07-0682 P07-0683	1919 Atlas Dr; 4500 - 4590 Allstate Dr., 1950 and 2000 Market St and 4300 - 4371 Latham St	General Plan Amendment to O; Rezoning from CR to O; 13 parcels	14.09			CC 3/24/09
G8	P09-0002	2255 Chicago Avenue and 1725 – 1735 Spruce St	Rezone a commercial center from the I-SP to the I-BSR-SP Zone	1.70			CC 3/24/09
R-9 G9	P09-0551	3524 Central Ave	Rezoning property from the R-1-7000 to Commercial Retail in the Magnolia Avenue Specific Plan	0.44			CC 4/13/10
G10	P09-0112 P09-0113	APN: 234231045	Rezoning from R-1-7000 to Business Manufacturing Park; General Plan Amendment from MDR to B/OP	3.27			CC 5/26/09

Map ID #	Case Number	Location	Project Description	Acres	Buildings Total Square Feet	Dwelling Units	Approval Date
G11	P09-0424	7797 and 7779 Indiana Ave	Rezoning approximately .51 acres of vacant property on the northwesterly side of Indiana Avenue between Jefferson Street and Winstrom Street, from R-1-7000 to CG in the Riverside Auto Center Specific Plan	0.51			CC 10/13/09
G12	P10-0080	1989 Massachusetts and 2800 – 2880 Hulen Pl	Rezoning from the I zone to the I-ES zone	1.80			CC 6/8/10
G13	P10-0454	4825 Tequesquite Ave	General Plan Amendment to change the Tequesquite Park site from Private Recreational Use to Public Park	43.64			CC 5/17/11
G14	P10-0377	6458 Van Buren Blvd	Rezoning property from Business Manufacturing Park to Commercial Retail	4.04			CC 6/28/11
G15	P11-0595 P11-0596	3375 Arlington Ave	General Plan Amendment to change portion of property from Office to Public Facilites; Rezoning portion of property from Commercial General to Residential Commercial Zone	0.8			CC 7/24/12
G16	P12-0334	NE cor Tequesquite & San Andreas Aves	City initiated General Plan Amendment for compliance with the new Housing Element (2006-2014); From MHDR to HDR for consistency with R-3-1500 multi-family residential zone	2.8			CC 10/22/13
G17	P12-0336	West side of Chicago Ave bet University Ave & 12th St	City initiated Rezoning for compliance with the new Housing Element (2006-2014); From Commercial to Mixed Use Urban (MU-U-SP) in the University Avenue Specific Plan	17.8			CC 10/22/13
G18	P12-0336	9 parcels at SE cor of Duncan Ave & Van Buren Blvd	City initiated Rezoning for compliance with the new Housing Element (2006-2014); From Single Family Residential to Multiple Family Residential & Airport Protection Compatibility Zone E Overlay (R-3-1500-AP-E)	5.6			CC 10/22/13
G19	P13-0263 P13-0264	18171 Van Buren Blvd	GPA from VLDR to C; RZ from R-1-1/2 Acre-SP to CR-SP; to facilitate the development of a retail commercial center on 2 contiguous parcels	7.17			4/21/2014
G20	P13-0553 P13-0554 P13-0583 P14-0065	5940 and 5980 Sycamore Canyon	GP, SP, RZ, DR; 275-unit multiple-family residential development, including common and private amenities and covered and uncovered surface parking, on two contiguous parcels	10.26			CC 03/17/2015
G21	P14-0600, P14-0601, P14-0602 P15-0044	Southeasterly corner of Mt. Baldy Drive and San Gorgonio Drive	RZ, DR, VR, VC; consideration of 1) an Amendment to the Municipal Code (Title 19) to rezone approximately 6.2 acres from the CR-S-2-SP – Commercial Retail, Height of Building (two stories), and Specific Plan (Sycamore Canyon Business Park) Overlay Zones to the BMP-S-2-SP – Business and Manufacturing Park, Height of Building (two stories), and Specific Plan (Sycamore Canyon Business Park) Overlay Zones; 2) for Design Review of the plot plan and building elevations related to the construction of an approximately 121,390 square foot multiple tenant industrial building as associated surface parking and landscaping; 3) for a variance to permit a building to encroach into the required 40-foot front yard setback; 4) vacation of excess right-of-way beyond the terminus of the existing cul-de-sac on Mt. Baldy Drive	6.2			

R-15

R-64

4.1-40

Map ID #	Case Number	Location	Project Description	Acres	Buildings Total Square Feet	Dwelling Units	Approval Date
G22	P13-0956 P13-0959 P13-0960 P13-0963 P13-0964 P13-0965 P13-0966	Southeast corner of Palmyrita Avenue and Michigan Avenue, and north of Sugarloaf Mountain	GP, SP, VC, TM, DR, MCUP, VR; Consideration of a phased development consisting of three (3) industrial buildings totaling approximately 1,461,449 square feet of Industrial Warehouse Distribution space	72.5			
E1	P06-1237	Fourteenth St and Brockton Av	EIR and Design Review; Jacobs Medical Office (Formerly Chinatown Site)	4.6	65,281		CC 10/7/08
E2	P09-0600 P09-0601	5200 Van Buren Blvd	Environmental Impact Report (EIR) certifying that the adopted resolution for the Wal-Mart Expansion is pursuant of the County of Riverside Land Use Compatability Plan	13.73	125,857 (existing bldg) 22,272 (addition)		CC 1/24/12
V1	P08-0175	along easterly side of Sycamore Canyon Blvd, bet. Cottonwood Av and Alessandro Blvd	Vacation of approximately 5,822 square feet of unused right-of-way	5,822.00			CC 6/3/08
V2	P08-0329	Commerce St bet. Mission Inn and University Aves	Summary vacation of a portion of Commerce Street for future development	17,424.00			CC 7/22/08
V3	P08-0144	portion of Chicago Av and Ferrari Dr	Vacation of Street from La Fayette and Ferrari Drive	94,525.20			CC 9/23/08
V4	P08-0474 P08-0475	Intersection at Bushness Av, La Sierra Av, Hole Av, Pierce St	Traffic Pattern Modification at Five Points Intersection; Designation of Five Points as City Historic Landmark	N/A			CC 10/7/08
V5	P08-0549	Intersection at Antioch and Hillside Aves	Traffic Pattern Modification at Antioch at Hillside	43,560.00			CC 10/28/08
V6	P08-0303 P08-0304 P08-0306	Santa Ana Ave between Jack B. Clarke Way and Ninth St; Jack B. Clarke Way between Santa Fe Avenue and the Railroad; Ninth St between Vine St and the Railroad; and 3141 Ninth St (packinghouse)	Street vacation of approximately 11,000 square feet of Santa Ana Ave between Jack B. Clarke Way and Ninth St; approximately 2,760 square feet of Jack B. Clarke Way between Santa Fe Avenue and the Railroad; and approximately 20,000 square feet of Ninth St between Vine St and the Railroad; Variance for parking; Certificate of Appropriateness to rehabilitate and adaptively re-use existing 2-story 20,212 sq.ft. historic packing house as an office; demolition of existing 6,637 sq.ft. rear addition constructed in 1939, in conjunction with proposed 3-story, 19,625 sq.ft. office addition	33,760.00			CC 11/18/2008; CHB 7/16/08

Conditional Use Permits

Map ID #	Case Number	Location	Project Description	Acres	Buildings Total Square Feet	Dwelling Units	Approval Date
V7	P09-0130	ROW adjacent to 5236 Olivewood Av bet. Panorama and Boxwood Roads	Summary Vacation of portion of Olivewood Ave	18,982.51			CC 5/5/09
V8	P08-0749	ROW adjacent to 6692 Indiana Ave; ROW adacent to 3355 Jane St bet. Indiana Av and BNSF Railroad	Summary Vacation of portion of Indiana Ave and Jane St	12,465.00			CC 5/26/09
V9	P09-0205 P09-0206	Dufferin Av from Stewart St to McAllister Pkwy	Street Vacation and Traffic Pattern Modification to construct knuckle at Dufferin Ave and Steward St and to prohibit vehicle access at Dufferin Ave from McAllister Parkway	23,846.06			CC 7/14/09
V10	P09-0378	Monroe St southwest of California Ave	Summary vaction of approximately 0.213 acres of unimproved right of way along Monroe Street, southwesterly of California	9,278.28			CC 7/28/09
V11	P09-0217	alley between 4290, 4310 Oakwood Pl and 4291, 4319 Rosewood Pl	Vacation of an alley	4,440.00			CC 8/25/09
V12	P09-0505	portion of cul-de-sac bulb adjacent to 5696-5698 Peggy Ln, westerly of Chadbourne Ave	Summary vacation of approximately 4,425 square feet of unused right-of-way located at the westerly terminus of Peggy Lane	4,425.00			CC 10/6/09
V13	P09-0199	south side of Ninth street, between Orange and Lemon Streets	Vacate an existing alleyway to become a part of an alley port entry in conjunction with a 10-story Office Bldg at 3940-3998 Orange St	2,752.00			CC 1/5/10
V14	P10-0001	Stub portion of Ninth St bet. Lime St and 91 Freeway	Vacate a portion of Ninth St; located between Lime Street and Highway 91	6,600.00			CC 5/25/10
V15	P09-0135	Tenth and Eleventh Streets bet. Lime St and	Close remaining portion of Tenth and Eleventh Streets				CC 10/5/10
V16	P10-0667	alley bet. Sixth St, Mission Inn Ave, Main St, and Market St	Summary vacation of approximately 1,605 square feet of excess right-of-way	1,605.00			CC 1/18/11
V17	P10-0799	end of Payton Ave	Summary vacation of the remaining of unused public Right of Way for 5894 Payton Ave	53,654.43			CC 3/22/11
V18	P09-0810	Eucalyptus St, south of Vasquez St	Vacate a portion of Eucalyptus, southerly of Vasquez Street	4,286.74			CPC 5/5/11
V19	P11-0011	21 ft. of ROW along Palm Ave at Rubidoux Ave	Summary vacation of approximately 2,722 square feet of excess right-of-way located at the intersection of Palm Ave and Rubdioux Ave	8,968.00			CC 6/14/11

	Map ID #	Case Number	Location	Project Description	Acres	Buildings Total Square Feet	Dwelling Units	Approval Date
	V20	P11-0199	Fairmount Blvd bet. Whittier Pl and University Ave	3892 University Ave, 3902 University Ave, 3892 University Ave, 3907 University Ave, 3907 Whittier Pl; Vacation summary of a portion of Fairmount Blvd. between Whittier Pl. anc University Ave. to construct the Riverside Community College Culinary Institute with an underground parking structure	15,566.00			CC 7/26/11
R-9	V21	P11-0502	Magnolia Ave adjacent to Palm Shadows Apartments (3697 Monroe St) bet. Adams and Monroe Streets	Summary vacation to vacate an excess right-of-way along Magnolia Ave in the Magnolia Avenue Specific Plan	679,543.00			CC 11/8/11
R-9	V22	P11-0599	alley south of the western terminus at 3716 Elizabeth St and north of the Union Pacific Railroad ROW	Summary Vacation of an approximately 25-foot wide by 149-foot long segment of public alley in the Magnolia Avenue Specific Plan	7,043.00			CC 12/6/11
	V23	P09-0794	alley in block surrounded by Mission Inn Ave, Sixth St, Market St, and Fairmount Blvd	Summary vacation of a 15 foot wide alley	5,400.00			CC 1/17/12
	V24	P11-0601	alley bet. Seventh St and University Ave, easterly Mesa St	1764 Seventh St; Summary vacation approximately 120-foot by five-foot wide portion of public alley, located between Seventh Street and University Avenue, easterly of Mesa Street, adjacent to the southerly property lines of 1764 and 1774 Seventh Street. The approximately 600 square-foot area to be vacated can be considered excess right-of-way and is no longer needed for street purposes	600.00			CC 2/7/12
R-6	V25	P12-0127	3649 Mission Inn Ave	Summary Vacation of approximately 116-foot by 19-foot segment of excess right-of-way siutated on the easterly side of Main Street and Southerly of Sixth Street with the Downtown Specific Plan Raincross District Commercial Retail Zone	2,204.00			CC 5/1/12
	V26	P12-0136	6900 Jurupa Ave	Summary Vacation of approximately 6,937 square feet of unused public right-of-way and authorize the preparation of a Certificate of Compliance to incorporate the vacated area into the property of 6900 Jurupa Avenue within the Business Manufacturing Park Zone	6,937.00			CC 5/15/12
R-9	V27	P11-0543 P10-0762 P10-0763	Magnolia Ave adjacent to 7431 and 7451 Magnolia Ave	Summary vacation of a segment of public right-of-way along the frontage of 7431 and 7451 Magnolia Ave, which is developed with an apartment complex and related parking areas in the Magnolia Avenue Specific Plan	51,179.00			CC 5/22/12

Conditional Use Permits

Map ID #	Case Number	Location	Project Description	Acres	Buildings Total Square Feet	Dwelling Units	Approval Date
V28	P12-0066	4900 Golden Ave	Summary Vacation of approximately 11-foot wide by 822-foot long segment of excess public right-of-way on the westerly side of Golden Ave and an approximately 12-foot wide by 766-foot long segment of public right-of-way on the northerly side of Pierce Street located within the Residential Estate Zone	18,234.00			CC 9/11/12
V29	P13-0657	NW cor Van Buren Blvd & Magnolia Ave	Summary Vacation of excess right of way				CC 10/22/13
V30	P13-0728	Stacy Ct bet. Paige Dr & Columbia Ave	Summary Vacation				CC 10/22/13
V31	P12-0309	Monte Vista & Pollard	Vacation of approximately .5-acre of public right-of-way, consisting of portions of Monte Vista Drive and Pollard Way, adjacent to the properties at 739 and 778 Monte Vista Drive for a proposed 88-unit apartment project				CPC 03/19/15
V32	P14-0149	Diana Avenue between Adams and Monroe Streets	Vacation of Diana Avenue between Adams and Monroe Streets, including Wilma Court and Emily Court in their entirety, the area to be vacated is approximately 3.4 acres, in Ward 5	3.40			
D1	P08-0701 P08-0702	4393 Tyler St	DR, Rezoning from R-1-7000 to Office; Remodel and reuse of multi-family buildings as offices	0.49	4,950	-	CC 4/21/09
D2	P10-0406 P10-0407 P10-0408	11500 Magnolia Ave	Site Plan Review, Design Review, Variance; Apartment Complex	7.60	-	168	CC 1/11/11
D3	P12-0184 P12-0185 P12-0187	9241 and 9265 Audrey Ave	General Plan Amendment to change property from MDR to C; Rezoning from R-1-7000 to C; and Design review to facilitate the construction of a multiple tenant retail building on a two parcel site, known as the Azar Plaza	0.6	6,150	-	CC 11/13/12
D4	P12-0507 P12-0508 P12-0509 P12-0510	2325 Cottonwood Av	DR, VR LLA, LS/I; 235,741 sqft addition to an existing 400,580 sqft warehouse/ industrial building	9.5 project site	636,321	-	ZA 12/7/12
D5	P12-0717	1710 Main Street	Family Dollar store	1.01	8,039	-	ZA 3/11/13
D6	P12-0741 P12-0743 P14-0238	3545 Central Ave	Riverside Plaza renovations; Pad 3 renovations to consist of 7 tenant spaces with outdoor dining	35.00	-	-	ZA 6/7/13; ZA 7/9/14
D7	P13-0038 P13-0441	3683 Adams St	Rezoning property from Single Family Residential to Mixed Use Neighborhood Zone in the Magnolia Avenue Specific Plan; Design Review for conversion of an existing single family residence into a live/work unit	0.32	1237 (existing residence)	1	CC 8/27/13
D8	P12-0729 P12-0727	4015 Madison St	RZ/DR; Rezoning from R-1-7000 to O-S-1 to accommodate the expansion of parking lot for existing medical office	0.26	-	-	CC 9/24/13
D9	P13-0198 P13-0199 P13-0200 P13-0201	5731, 5741, 5761, & 5797 Pickler St	GP, RZ, COA, PPE; Proposal for rehabilitation of Camp Anza Officer's Club and development of affordable housing with on-site support services for disabled veterans and their families; Rezoning from single family to multi-family (apartment units)	2.14	-	30	CC 11/19/13

4.1-44

R-55 R-56 R-57 R-58 R-60 R-9 R-61

	Map ID #	Case Number	Location	Project Description	Acres	Buildings Total Square Feet	Dwelling Units	Approval Date
R-62	D10	P13-0501 P13-0502	3705 Tyler St	PPE, DR; Demolish existing tire building and construct new 2-Tenant Restaurant building within existing shopping center	10.80	6,000	-	CC 12/3/13
	D11	P13-0916 P13-0917 P13-0918 P13-0919	10403-10485 Magnolia Ave	DR, RZ, SitePlan Review, VR; Time extension for P05-1521, P08-0706, P08-0740, P08-0794; Magnolia Square mixed use development, Parcel map 36112	16.6	71,211 commercial/retail	315 multi-family; 3 live/work	12/16/2013
R-5	D12	P13-0247 P13-0248 P13-0249 P13-0251 P13-0252	9565 Rudicill St	Apartment complex on 4 lots (to be consolidated); Site Plan Review, DR, GPA from B/OP to HDR, Rezone from BMP-SP to R-4-SP, SPA (Citrus Business Park Specific Plan)	4.05	-	102	CC 8/12/14???
R-17	D13	P13-0607 P13-0608 P13-0609 P13-0854	SE cor Sycamore Canyon Blvd & Box Springs Rd	Multi-tenant industrial building; GPA, RZ, DR, SPA to remove site from Sycamore Highlands SP and add it to Sycamore Canyon Business Park SP		171,616	-	CC 5/13/14
R-70	D14	P13-0207 P13-0208 P13-0209 P13-0210 P13-0211	4445 Magnolia Ave	EIR, GPA, RZ, DR, SP; Riverside Community Hospital proposed expansion				CC 5/20/14
	D15	P13-0324 P13-0325 P13-0326 P13-0327	Northerly side of Indiana Ave, Easterly of La Sierra Ave, adjacent to La Sierra Metrolink station	Transit-oriented residential development; Site Plan Review, DR, Rezone from R-1-7000-SP to MU-U-SP, SPA (Riverwalk Vista Specific Plan)	3.7	-	187	CPC 5/8/14
	D16	P13-0563 P13-0564	8069 Indiana Ave	DR,VAC; construction of 7,373 sqft addition to facilitate vehicle service and parts sales; Singh Subaru; vacation of Susan Street between Indiana Ave & SR91		7,373		CC 6/3/14
	D17	P14-0318	3502 through 3520 Tyler St	PPE, DR; Construct a 10,000 sqft restaurant building; add façade improvements to an existing retail building		10,000		ZA 7/11/14
	D18	P14-0183	3105 Market St	DR; Centerpointe Apartments	2.51		146	1/26/2015

A1	P14-0246	NW cor of Sycamore Canyon Blvd & Central Ave	Annexation of a vacant site to facilitate development of retail commercial shopping center	9.4			CC 7/8/14

4.1-45

This Page Intentionally Left Blank

APPENDIX 5.1:

E+P CONDITIONS INTERSECTION OPERATIONS ANALYSIS WORKSHEETS

This Page Intentionally Left Blank

Movement	EBL	EBT	EBR	WBL	WBT	WBR	NBL	NBT	NBR	SBL	SBT	SBR
Lane Configurations												
Traffic Volume (veh/h)	0	557	10	176	206	0	0	0	0	427	3	140
Future Volume (veh/h)	0	557	10	176	206	0	0	0	0	427	3	140
Number	5	2	12	1	6	16				7	4	14
Initial Q (Qb), veh	0	0	0	0	0	0				0	0	0
Ped-Bike Adj(A_pbT)	1.00		1.00	1.00		1.00				1.00		1.00
Parking Bus, Adj	1.00	1.00	1.00	1.00	1.00	1.00				1.00	1.00	1.00
Adj Sat Flow, veh/h/ln	0	1900	1900	1900	1900	0				1900	1900	1900
Adj Flow Rate, veh/h	0	612	8	193	226	0				469	3	89
Adj No. of Lanes	0	2	1	1	2	0				0	1	1
Peak Hour Factor	0.91	0.91	0.91	0.91	0.91	0.91				0.91	0.91	0.91
Percent Heavy Veh, %	0	0	0	0	0	0				0	0	0
Cap, veh/h	0	1697	759	218	2268	0				519	3	466
Arrive On Green	0.00	0.47	0.47	0.24	1.00	0.00				0.29	0.29	0.29
Sat Flow, veh/h	0	3705	1615	1810	3705	0				1799	12	1615
Grp Volume(v), veh/h	0	612	8	193	226	0				472	0	89
Grp Sat Flow(s),veh/h/ln	0	1805	1615	1810	1805	0				1810	0	1615
Q Serve(g_s), s	0.0	13.0	0.3	12.3	0.0	0.0				30.1	0.0	5.0
Cycle Q Clear(g_c), s	0.0	13.0	0.3	12.3	0.0	0.0				30.1	0.0	5.0
Prop In Lane	0.00		1.00	1.00		0.00				0.99		1.00
Lane Grp Cap(c), veh/h	0	1697	759	218	2268	0				522	0	466
V/C Ratio(X)	0.00	0.36	0.01	0.88	0.10	0.00				0.90	0.00	0.19
Avail Cap(c_a), veh/h	0	1697	759	369	2268	0				679	0	606
HCM Platoon Ratio	1.00	1.00	1.00	2.00	2.00	1.00				1.00	1.00	1.00
Upstream Filter(I)	0.00	1.00	1.00	0.98	0.98	0.00				1.00	0.00	1.00
Uniform Delay (d), s/veh	0.0	20.3	16.9	44.7	0.0	0.0				41.1	0.0	32.2
Incr Delay (d2), s/veh	0.0	0.6	0.0	6.6	0.1	0.0				13.0	0.0	0.2
Initial Q Delay(d3),s/veh	0.0	0.0	0.0	0.0	0.0	0.0				0.0	0.0	0.0
%ile BackOfQ(50%),veh/ln	0.0	6.6	0.1	6.5	0.0	0.0				17.0	0.0	2.3
LnGrp Delay(d),s/veh	0.0	20.9	17.0	51.3	0.1	0.0				54.1	0.0	32.3
LnGrp LOS		C	B	D	A					D		C
Approach Vol, veh/h		620			419						561	
Approach Delay, s/veh		20.8			23.7						50.7	
Approach LOS		C			C						D	

Timer	1	2	3	4	5	6	7	8
Assigned Phs	1	2		4		6		
Phs Duration (G+Y+Rc), s	19.0	61.4		39.6		80.4		
Change Period (Y+Rc), s	4.5	5.0		5.0		5.0		
Max Green Setting (Gmax), s	24.5	36.0		45.0		65.0		
Max Q Clear Time (g_c+I1), s	14.3	15.0		32.1		2.0		
Green Ext Time (p_c), s	0.2	3.3		2.5		3.6		

Intersection Summary	
HCM 2010 Ctrl Delay	32.0
HCM 2010 LOS	C

Movement	EBL	EBT	EBR	WBL	WBT	WBR	NBL	NBT	NBR	SBL	SBT	SBR
Lane Configurations												
Traffic Volume (veh/h)	315	669	0	0	369	522	12	4	113	0	0	0
Future Volume (veh/h)	315	669	0	0	369	522	12	4	113	0	0	0
Number	5	2	12	1	6	16	3	8	18			
Initial Q (Qb), veh	0	0	0	0	0	0	0	0	0			
Ped-Bike Adj(A_pbT)	1.00		1.00	1.00		1.00	1.00		1.00			
Parking Bus, Adj	1.00	1.00	1.00	1.00	1.00	1.00	1.00	1.00	1.00			
Adj Sat Flow, veh/h/ln	1900	1900	0	0	1900	1900	1900	1900	1900			
Adj Flow Rate, veh/h	362	769	0	0	424	574	14	5	76			
Adj No. of Lanes	1	2	0	0	2	1	0	1	1			
Peak Hour Factor	0.87	0.87	0.87	0.87	0.87	0.87	0.87	0.87	0.87			
Percent Heavy Veh, %	0	0	0	0	0	0	0	0	0			
Cap, veh/h	384	2798	0	0	1927	862	191	68	229			
Arrive On Green	0.42	1.00	0.00	0.00	0.53	0.53	0.14	0.14	0.14			
Sat Flow, veh/h	1810	3705	0	0	3705	1615	1350	482	1615			
Grp Volume(v), veh/h	362	769	0	0	424	574	19	0	76			
Grp Sat Flow(s),veh/h/ln	1810	1805	0	0	1805	1615	1832	0	1615			
Q Serve(g_s), s	23.0	0.0	0.0	0.0	7.4	30.8	1.1	0.0	5.1			
Cycle Q Clear(g_c), s	23.0	0.0	0.0	0.0	7.4	30.8	1.1	0.0	5.1			
Prop In Lane	1.00		0.00	0.00		1.00	0.74		1.00			
Lane Grp Cap(c), veh/h	384	2798	0	0	1927	862	260	0	229			
V/C Ratio(X)	0.94	0.27	0.00	0.00	0.22	0.67	0.07	0.00	0.33			
Avail Cap(c_a), veh/h	535	2798	0	0	1927	862	260	0	229			
HCM Platoon Ratio	2.00	2.00	1.00	1.00	1.00	1.00	1.00	1.00	1.00			
Upstream Filter(I)	0.92	0.92	0.00	0.00	1.00	1.00	1.00	0.00	1.00			
Uniform Delay (d), s/veh	33.9	0.0	0.0	0.0	14.8	20.2	44.7	0.0	46.4			
Incr Delay (d2), s/veh	17.4	0.2	0.0	0.0	0.3	4.1	0.5	0.0	3.9			
Initial Q Delay(d3),s/veh	0.0	0.0	0.0	0.0	0.0	0.0	0.0	0.0	0.0			
%ile BackOfQ(50%),veh/ln	13.1	0.1	0.0	0.0	3.8	14.7	0.6	0.0	2.5			
LnGrp Delay(d),s/veh	51.3	0.2	0.0	0.0	15.0	24.3	45.2	0.0	50.3			
LnGrp LOS	D	A			B	C	D		D			
Approach Vol, veh/h		1131			998			95				
Approach Delay, s/veh		16.6			20.4			49.2				
Approach LOS		B			C			D				

Timer	1	2	3	4	5	6	7	8
Assigned Phs		2			5	6		8
Phs Duration (G+Y+Rc), s		98.0			28.9	69.1		22.0
Change Period (Y+Rc), s		5.0			3.5	5.0		5.0
Max Green Setting (Gmax), s		93.0			35.5	54.0		17.0
Max Q Clear Time (g_c+I1), s		2.0			25.0	32.8		7.1
Green Ext Time (p_c), s		7.1			0.4	6.3		0.2

Intersection Summary	
HCM 2010 Ctrl Delay	19.7
HCM 2010 LOS	B

Intersection	
Int Delay, s/veh	1.5

Movement	EBL	EBT	WBT	WBR	SBL	SBR
Traffic Vol, veh/h	68	714	823	26	2	68
Future Vol, veh/h	68	714	823	26	2	68
Conflicting Peds, #/hr	0	0	0	0	0	0
Sign Control	Free	Free	Free	Free	Stop	Stop
RT Channelized	-	None	-	None	-	None
Storage Length	-	-	-	0	0	-
Veh in Median Storage, #	-	0	0	-	0	-
Grade, %	-	0	0	-	0	-
Peak Hour Factor	82	82	82	82	82	82
Heavy Vehicles, %	0	0	0	0	0	0
Mvmt Flow	83	871	1004	32	2	83

Major/Minor	Major1		Major2		Minor2	
Conflicting Flow All	1004	0	-	0	1605	502
Stage 1	-	-	-	-	1004	-
Stage 2	-	-	-	-	601	-
Critical Hdwy	4.1	-	-	-	6.8	6.9
Critical Hdwy Stg 1	-	-	-	-	5.8	-
Critical Hdwy Stg 2	-	-	-	-	5.8	-
Follow-up Hdwy	2.2	-	-	-	3.5	3.3
Pot Cap-1 Maneuver	698	-	-	-	*153	520
Stage 1	-	-	-	-	*320	-
Stage 2	-	-	-	-	*756	-
Platoon blocked, %		-	-	-	1	
Mov Cap-1 Maneuver	698	-	-	-	*118	520
Mov Cap-2 Maneuver	-	-	-	-	*118	-
Stage 1	-	-	-	-	*320	-
Stage 2	-	-	-	-	*582	-

Approach	EB	WB	SB
HCM Control Delay, s	1.9	0	14.3
HCM LOS			B

Minor Lane/Major Mvmt	EBL	EBT	WBT	WBR	SBLn1
Capacity (veh/h)	698	-	-	-	474
HCM Lane V/C Ratio	0.119	-	-	-	0.18
HCM Control Delay (s)	10.9	1	-	-	14.3
HCM Lane LOS	B	A	-	-	B
HCM 95th %tile Q(veh)	0.4	-	-	-	0.7

Notes			
~: Volume exceeds capacity	$: Delay exceeds 300s	+: Computation Not Defined	*: All major volume in platoon

Movement	EBL	EBT	EBR	WBL	WBT	WBR	NBL	NBT	NBR	SBL	SBT	SBR
Lane Configurations												
Traffic Volume (veh/h)	9	631	11	2	733	14	79	2	9	3	4	6
Future Volume (veh/h)	9	631	11	2	733	14	79	2	9	3	4	6
Number	5	2	12	1	6	16	3	8	18	7	4	14
Initial Q (Qb), veh	0	0	0	0	0	0	0	0	0	0	0	0
Ped-Bike Adj(A_pbT)	1.00		1.00	1.00		1.00	1.00		1.00	1.00		1.00
Parking Bus, Adj	1.00	1.00	1.00	1.00	1.00	1.00	1.00	1.00	1.00	1.00	1.00	1.00
Adj Sat Flow, veh/h/ln	1900	1900	1900	1900	1900	1900	1900	1900	1900	1900	1900	1900
Adj Flow Rate, veh/h	11	770	11	2	894	17	96	2	6	4	5	5
Adj No. of Lanes	1	2	1	1	2	1	0	1	0	0	1	1
Peak Hour Factor	0.82	0.82	0.82	0.82	0.82	0.82	0.82	0.82	0.82	0.82	0.82	0.82
Percent Heavy Veh, %	0	0	0	0	0	0	0	0	0	0	0	0
Cap, veh/h	24	1575	704	5	1536	687	597	14	33	329	392	635
Arrive On Green	0.01	0.44	0.44	0.00	0.43	0.43	0.39	0.39	0.39	0.39	0.39	0.39
Sat Flow, veh/h	1810	3610	1615	1810	3610	1615	1323	36	83	689	996	1615
Grp Volume(v), veh/h	11	770	11	2	894	17	104	0	0	9	0	5
Grp Sat Flow(s),veh/h/ln	1810	1805	1615	1810	1805	1615	1442	0	0	1685	0	1615
Q Serve(g_s), s	0.5	13.8	0.3	0.1	17.0	0.6	4.0	0.0	0.0	0.0	0.0	0.2
Cycle Q Clear(g_c), s	0.5	13.8	0.3	0.1	17.0	0.6	4.3	0.0	0.0	0.3	0.0	0.2
Prop In Lane	1.00		1.00	1.00		1.00	0.92		0.06	0.44		1.00
Lane Grp Cap(c), veh/h	24	1575	704	5	1536	687	644	0	0	720	0	635
V/C Ratio(X)	0.46	0.49	0.02	0.41	0.58	0.02	0.16	0.00	0.00	0.01	0.00	0.01
Avail Cap(c_a), veh/h	207	1575	704	107	1536	687	644	0	0	720	0	635
HCM Platoon Ratio	1.00	1.00	1.00	1.00	1.00	1.00	1.00	1.00	1.00	1.00	1.00	1.00
Upstream Filter(I)	1.00	1.00	1.00	1.00	1.00	1.00	1.00	0.00	0.00	1.00	0.00	1.00
Uniform Delay (d), s/veh	44.1	18.2	14.4	44.8	19.7	15.0	17.9	0.0	0.0	16.6	0.0	16.6
Incr Delay (d2), s/veh	4.9	1.1	0.0	18.9	1.6	0.1	0.5	0.0	0.0	0.0	0.0	0.0
Initial Q Delay(d3),s/veh	0.0	0.0	0.0	0.0	0.0	0.0	0.0	0.0	0.0	0.0	0.0	0.0
%ile BackOfQ(50%),veh/ln	0.3	7.1	0.2	0.1	8.8	0.3	1.8	0.0	0.0	0.1	0.0	0.1
LnGrp Delay(d),s/veh	49.0	19.3	14.4	63.8	21.4	15.1	18.4	0.0	0.0	16.7	0.0	16.6
LnGrp LOS	D	B	B	E	C	B	B			B		B
Approach Vol, veh/h		792			913			104			14	
Approach Delay, s/veh		19.6			21.3			18.4			16.7	
Approach LOS		B			C			B			B	

Timer	1	2	3	4	5	6	7	8
Assigned Phs	1	2		4	5	6		8
Phs Duration (G+Y+Rc), s	4.4	45.1		40.5	5.4	44.1		40.5
Change Period (Y+Rc), s	* 4.2	5.8		5.1	* 4.2	5.8		5.1
Max Green Setting (Gmax), s	* 5.3	34.2		35.4	* 10	29.2		35.4
Max Q Clear Time (g_c+I1), s	2.1	15.8		2.3	2.5	19.0		6.3
Green Ext Time (p_c), s	0.0	7.3		0.4	0.0	5.3		0.4

Intersection Summary	
HCM 2010 Ctrl Delay	20.4
HCM 2010 LOS	C

Notes

Intersection	
Int Delay, s/veh	0

Movement	EBT	EBR	WBL	WBT	NBL	NBR
Traffic Vol, veh/h	634	2	0	747	0	3
Future Vol, veh/h	634	2	0	747	0	3
Conflicting Peds, #/hr	0	0	0	0	0	0
Sign Control	Free	Free	Free	Free	Stop	Stop
RT Channelized	-	None	-	None	-	None
Storage Length	-	-	-	-	-	0
Veh in Median Storage, #	0	-	-	0	0	-
Grade, %	0	-	-	0	0	-
Peak Hour Factor	86	86	86	86	86	86
Heavy Vehicles, %	0	0	0	0	0	0
Mvmt Flow	737	2	0	869	0	3

Major/Minor	Major1		Major2		Minor1	
Conflicting Flow All	0	0	740	0	1085	370
Stage 1	-	-	-	-	738	-
Stage 2	-	-	-	-	347	-
Critical Hdwy	-	-	5.3	-	5.7	7.1
Critical Hdwy Stg 1	-	-	-	-	6.6	-
Critical Hdwy Stg 2	-	-	-	-	6	-
Follow-up Hdwy	-	-	3.1	-	3.8	3.9
Pot Cap-1 Maneuver	-	-	845	-	*286	*800
Stage 1	-	-	-	-	*661	-
Stage 2	-	-	-	-	*780	-
Platoon blocked, %	-	-	1	-		1
Mov Cap-1 Maneuver	-	-	845	-	*286	*800
Mov Cap-2 Maneuver	-	-	-	-	*286	-
Stage 1	-	-	-	-	*661	-
Stage 2	-	-	-	-	*780	-

Approach	EB	WB	NB
HCM Control Delay, s	0	0	9.5
HCM LOS			A

Minor Lane/Major Mvmt	NBLn1	EBT	EBR	WBL	WBT
Capacity (veh/h)	800	-	-	845	-
HCM Lane V/C Ratio	0.004	-	-	-	-
HCM Control Delay (s)	9.5	-	-	0	-
HCM Lane LOS	A	-	-	A	-
HCM 95th %tile Q(veh)	0	-	-	0	-

Notes

~: Volume exceeds capacity $: Delay exceeds 300s +: Computation Not Defined *: All major volume in platoon

Movement	EBL	EBT	EBR	WBL	WBT	WBR	NBL	NBT	NBR	SBL	SBT	SBR
Lane Configurations												
Traffic Volume (veh/h)	1	22	112	58	15	5	73	214	36	6	63	4
Future Volume (veh/h)	1	22	112	58	15	5	73	214	36	6	63	4
Number	7	4	14	3	8	18	5	2	12	1	6	16
Initial Q (Qb), veh	0	0	0	0	0	0	0	0	0	0	0	0
Ped-Bike Adj(A_pbT)	1.00		1.00	1.00		1.00	1.00		1.00	1.00		0.98
Parking Bus, Adj	1.00	1.00	1.00	1.00	1.00	1.00	1.00	1.00	1.00	1.00	1.00	1.00
Adj Sat Flow, veh/h/ln	1900	1900	1900	1900	1900	1900	1900	1900	1900	1900	1900	1900
Adj Flow Rate, veh/h	1	26	81	69	18	5	87	255	36	7	75	4
Adj No. of Lanes	1	1	1	1	1	1	1	2	0	1	2	0
Peak Hour Factor	0.84	0.84	0.84	0.84	0.84	0.84	0.84	0.84	0.84	0.84	0.84	0.84
Percent Heavy Veh, %	0	0	0	0	0	0	0	0	0	0	0	0
Cap, veh/h	80	228	294	89	238	202	112	1803	252	16	1789	95
Arrive On Green	0.04	0.12	0.12	0.05	0.13	0.13	0.06	0.57	0.57	0.01	0.51	0.51
Sat Flow, veh/h	1810	1900	1615	1810	1900	1611	1810	3182	444	1810	3484	184
Grp Volume(v), veh/h	1	26	81	69	18	5	87	143	148	7	39	40
Grp Sat Flow(s),veh/h/ln	1810	1900	1615	1810	1900	1611	1810	1805	1821	1810	1805	1863
Q Serve(g_s), s	0.0	1.0	2.5	3.0	0.7	0.2	3.8	3.0	3.1	0.3	0.8	0.9
Cycle Q Clear(g_c), s	0.0	1.0	2.5	3.0	0.7	0.2	3.8	3.0	3.1	0.3	0.8	0.9
Prop In Lane	1.00		1.00	1.00		1.00	1.00		0.24	1.00		0.10
Lane Grp Cap(c), veh/h	80	228	294	89	238	202	112	1023	1032	16	927	957
V/C Ratio(X)	0.01	0.11	0.28	0.77	0.08	0.02	0.77	0.14	0.14	0.43	0.04	0.04
Avail Cap(c_a), veh/h	120	570	585	131	582	493	176	1023	1032	120	927	957
HCM Platoon Ratio	1.00	1.00	1.00	1.00	1.00	1.00	1.00	1.00	1.00	1.00	1.00	1.00
Upstream Filter(I)	1.00	1.00	1.00	1.00	1.00	1.00	1.00	1.00	1.00	1.00	1.00	1.00
Uniform Delay (d), s/veh	36.6	31.4	15.1	37.6	30.9	22.0	37.0	8.2	8.2	39.4	9.7	9.7
Incr Delay (d2), s/veh	0.0	0.1	0.2	8.2	0.0	0.0	4.2	0.3	0.3	6.5	0.1	0.1
Initial Q Delay(d3),s/veh	0.0	0.0	0.0	0.0	0.0	0.0	0.0	0.0	0.0	0.0	0.0	0.0
%ile BackOfQ(50%),veh/ln	0.0	0.5	1.1	1.7	0.4	0.1	2.0	1.6	1.6	0.2	0.4	0.5
LnGrp Delay(d),s/veh	36.6	31.5	15.3	45.8	30.9	22.0	41.2	8.5	8.5	45.9	9.8	9.8
LnGrp LOS	D	C	B	D	C	C	D	A	A	D	A	A
Approach Vol, veh/h		108			92			378			86	
Approach Delay, s/veh		19.4			41.6			16.0			12.7	
Approach LOS		B			D			B			B	

Timer	1	2	3	4	5	6	7	8
Assigned Phs	1	2	3	4	5	6	7	8
Phs Duration (G+Y+Rc), s	4.9	51.5	8.1	15.4	9.2	47.3	7.7	15.8
Change Period (Y+Rc), s	* 4.2	6.2	4.2	* 5.8	* 4.2	6.2	4.2	* 5.8
Max Green Setting (Gmax), s	* 5.3	24.5	5.8	* 24	* 7.8	22.0	5.3	* 25
Max Q Clear Time (g_c+I1), s	2.3	5.1	5.0	4.5	5.8	2.9	2.0	2.7
Green Ext Time (p_c), s	0.0	1.0	0.0	0.2	0.0	1.0	0.0	0.0

Intersection Summary	
HCM 2010 Ctrl Delay	19.7
HCM 2010 LOS	B

Notes

Intersection	
Int Delay, s/veh	0.6

Movement	WBL	WBR	NBT	NBR	SBL	SBT
Traffic Vol, veh/h	25	5	333	35	1	242
Future Vol, veh/h	25	5	333	35	1	242
Conflicting Peds, #/hr	0	0	0	0	0	0
Sign Control	Stop	Stop	Free	Free	Free	Free
RT Channelized	-	None	-	None	-	None
Storage Length	210	0	-	-	120	-
Veh in Median Storage, #	2	-	0	-	-	0
Grade, %	0	-	0	-	-	0
Peak Hour Factor	84	84	84	84	84	84
Heavy Vehicles, %	0	0	0	0	0	0
Mvmt Flow	30	6	396	42	1	288

Major/Minor	Minor1		Major1		Major2	
Conflicting Flow All	707	417	0	0	438	0
Stage 1	417	-	-	-	-	-
Stage 2	290	-	-	-	-	-
Critical Hdwy	6.4	6.2	-	-	4.1	-
Critical Hdwy Stg 1	5.4	-	-	-	-	-
Critical Hdwy Stg 2	5.4	-	-	-	-	-
Follow-up Hdwy	3.5	3.3	-	-	2.2	-
Pot Cap-1 Maneuver	415	640	-	-	1133	-
Stage 1	669	-	-	-	-	-
Stage 2	808	-	-	-	-	-
Platoon blocked, %	1		-	-		-
Mov Cap-1 Maneuver	414	640	-	-	1133	-
Mov Cap-2 Maneuver	519	-	-	-	-	-
Stage 1	669	-	-	-	-	-
Stage 2	807	-	-	-	-	-

Approach	WB	NB	SB
HCM Control Delay, s	12.1	0	0
HCM LOS	B		

Minor Lane/Major Mvmt	NBT	NBR	WBLn1	WBLn2	SBL	SBT
Capacity (veh/h)	-	-	519	640	1133	-
HCM Lane V/C Ratio	-	-	0.057	0.009	0.001	-
HCM Control Delay (s)	-	-	12.4	10.7	8.2	-
HCM Lane LOS	-	-	B	B	A	-
HCM 95th %tile Q(veh)	-	-	0.2	0	0	-

Intersection	
Int Delay, s/veh	0.6

Movement	EBL	EBR	NBL	NBT	SBT	SBR
Traffic Vol, veh/h	7	11	31	360	246	20
Future Vol, veh/h	7	11	31	360	246	20
Conflicting Peds, #/hr	0	0	0	0	0	0
Sign Control	Stop	Stop	Free	Free	Free	Free
RT Channelized	-	None	-	None	-	None
Storage Length	0	-	100	-	-	0
Veh in Median Storage, #	2	-	-	0	0	-
Grade, %	0	-	-	0	0	-
Peak Hour Factor	92	92	92	92	92	92
Heavy Vehicles, %	0	0	0	0	0	0
Mvmt Flow	8	12	34	391	267	22

Major/Minor	Minor2		Major1		Major2	
Conflicting Flow All	726	267	267	0	-	0
Stage 1	267	-	-	-	-	-
Stage 2	459	-	-	-	-	-
Critical Hdwy	6.4	6.2	4.1	-	-	-
Critical Hdwy Stg 1	5.4	-	-	-	-	-
Critical Hdwy Stg 2	5.4	-	-	-	-	-
Follow-up Hdwy	3.5	3.3	2.2	-	-	-
Pot Cap-1 Maneuver	403	870	1334	-	-	-
Stage 1	831	-	-	-	-	-
Stage 2	641	-	-	-	-	-
Platoon blocked, %	1	1	1	-	-	-
Mov Cap-1 Maneuver	392	870	1334	-	-	-
Mov Cap-2 Maneuver	497	-	-	-	-	-
Stage 1	831	-	-	-	-	-
Stage 2	625	-	-	-	-	-

Approach	EB	NB	SB
HCM Control Delay, s	10.5	0.6	0
HCM LOS	B		

Minor Lane/Major Mvmt	NBL	NBT	EBLn1	SBT	SBR
Capacity (veh/h)	1334	-	673	-	-
HCM Lane V/C Ratio	0.025	-	0.029	-	-
HCM Control Delay (s)	7.8	-	10.5	-	-
HCM Lane LOS	A	-	B	-	-
HCM 95th %tile Q(veh)	0.1	-	0.1	-	-

Intersection	
Int Delay, s/veh	1

Movement	EBL	EBR	NBL	NBT	SBT	SBR
Traffic Vol, veh/h	2	20	63	389	254	3
Future Vol, veh/h	2	20	63	389	254	3
Conflicting Peds, #/hr	0	0	0	0	0	0
Sign Control	Stop	Stop	Free	Free	Free	Free
RT Channelized	-	None	-	None	-	None
Storage Length	0	-	100	-	-	0
Veh in Median Storage, #	2	-	-	0	0	-
Grade, %	0	-	-	0	0	-
Peak Hour Factor	92	92	92	92	92	92
Heavy Vehicles, %	0	0	0	0	0	0
Mvmt Flow	2	22	68	423	276	3

Major/Minor	Minor2		Major1		Major2	
Conflicting Flow All	836	276	276	0	-	0
Stage 1	276	-	-	-	-	-
Stage 2	560	-	-	-	-	-
Critical Hdwy	6.4	6.2	4.1	-	-	-
Critical Hdwy Stg 1	5.4	-	-	-	-	-
Critical Hdwy Stg 2	5.4	-	-	-	-	-
Follow-up Hdwy	3.5	3.3	2.2	-	-	-
Pot Cap-1 Maneuver	*339	*889	*1334	-	-	-
Stage 1	*839	-	-	-	-	-
Stage 2	*576	-	-	-	-	-
Platoon blocked, %	1	1	1	-	-	-
Mov Cap-1 Maneuver	*322	*889	*1334	-	-	-
Mov Cap-2 Maneuver	*437	-	-	-	-	-
Stage 1	*839	-	-	-	-	-
Stage 2	*547	-	-	-	-	-

Approach	EB	NB	SB
HCM Control Delay, s	9.6	1.1	0
HCM LOS	A		

Minor Lane/Major Mvmt	NBL	NBT	EBLn1	SBT	SBR
Capacity (veh/h)	* 1334	-	813	-	-
HCM Lane V/C Ratio	0.051	-	0.029	-	-
HCM Control Delay (s)	7.8	-	9.6	-	-
HCM Lane LOS	A	-	A	-	-
HCM 95th %tile Q(veh)	0.2	-	0.1	-	-

Notes			
~: Volume exceeds capacity	$: Delay exceeds 300s	+: Computation Not Defined	*: All major volume in platoon

Movement	EBL	EBT	EBR	WBL	WBT	WBR	NBL	NBT	NBR	SBL	SBT	SBR
Lane Configurations												
Traffic Volume (veh/h)	297	301	45	15	446	33	64	148	16	10	61	200
Future Volume (veh/h)	297	301	45	15	446	33	64	148	16	10	61	200
Number	5	2	12	1	6	16	3	8	18	7	4	14
Initial Q (Qb), veh	0	0	0	0	0	0	0	0	0	0	0	0
Ped-Bike Adj(A_pbT)	1.00		1.00	1.00		0.98	1.00		1.00	1.00		1.00
Parking Bus, Adj	1.00	1.00	1.00	1.00	1.00	1.00	1.00	1.00	1.00	1.00	1.00	1.00
Adj Sat Flow, veh/h/ln	1900	1900	1900	1900	1900	1900	1900	1900	1900	1900	1900	1900
Adj Flow Rate, veh/h	323	327	41	16	485	29	70	161	3	11	66	185
Adj No. of Lanes	1	3	1	1	3	0	2	2	1	1	2	0
Peak Hour Factor	0.92	0.92	0.92	0.92	0.92	0.92	0.92	0.92	0.92	0.92	0.92	0.92
Percent Heavy Veh, %	0	0	0	0	0	0	0	0	0	0	0	0
Cap, veh/h	662	3610	1124	32	1661	98	150	1256	562	78	614	549
Arrive On Green	0.37	0.70	0.70	0.02	0.33	0.33	0.04	0.35	0.35	0.04	0.34	0.34
Sat Flow, veh/h	1810	5187	1615	1810	5002	296	3510	3610	1615	1810	1805	1615
Grp Volume(v), veh/h	323	327	41	16	334	180	70	161	3	11	66	185
Grp Sat Flow(s),veh/h/ln	1810	1729	1615	1810	1729	1840	1755	1805	1615	1810	1805	1615
Q Serve(g_s), s	13.8	2.0	1.2	0.9	7.1	7.2	1.9	3.0	0.2	0.6	2.5	8.5
Cycle Q Clear(g_c), s	13.8	2.0	1.2	0.9	7.1	7.2	1.9	3.0	0.2	0.6	2.5	8.5
Prop In Lane	1.00		1.00	1.00		0.16	1.00		1.00	1.00		1.00
Lane Grp Cap(c), veh/h	662	3610	1124	32	1148	611	150	1256	562	78	614	549
V/C Ratio(X)	0.49	0.09	0.04	0.49	0.29	0.29	0.47	0.13	0.01	0.14	0.11	0.34
Avail Cap(c_a), veh/h	662	3610	1124	90	1148	611	176	1256	562	90	614	549
HCM Platoon Ratio	1.00	1.00	1.00	1.00	1.00	1.00	1.00	1.00	1.00	1.00	1.00	1.00
Upstream Filter(I)	1.00	1.00	1.00	1.00	1.00	1.00	1.00	1.00	1.00	1.00	1.00	1.00
Uniform Delay (d), s/veh	24.5	4.9	10.9	48.7	24.7	24.7	46.7	22.2	35.2	46.1	22.6	24.6
Incr Delay (d2), s/veh	0.2	0.0	0.1	4.2	0.6	1.2	0.8	0.2	0.0	0.3	0.4	1.7
Initial Q Delay(d3),s/veh	0.0	0.0	0.0	0.0	0.0	0.0	0.0	0.0	0.0	0.0	0.0	0.0
%ile BackOfQ(50%),veh/ln	6.9	1.0	0.6	0.5	3.5	3.9	1.0	1.6	0.1	0.3	1.3	4.1
LnGrp Delay(d),s/veh	24.7	5.0	11.0	52.9	25.3	26.0	47.6	22.5	35.3	46.4	23.0	26.3
LnGrp LOS	C	A	B	D	C	C	D	C	D	D	C	C
Approach Vol, veh/h		691			530			234			262	
Approach Delay, s/veh		14.5			26.4			30.1			26.3	
Approach LOS		B			C			C			C	

Timer	1	2	3	4	5	6	7	8
Assigned Phs	1	2	3	4	5	6	7	8
Phs Duration (G+Y+Rc), s	6.0	76.3	8.5	40.2	43.3	39.0	8.5	40.2
Change Period (Y+Rc), s	* 4.2	5.8	4.2	* 6.2	5.8	* 5.8	4.2	* 5.4
Max Green Setting (Gmax), s	* 5	35.6	5.0	* 34	7.4	* 33	5.0	* 35
Max Q Clear Time (g_c+I1), s	2.9	4.0	3.9	10.5	15.8	9.2	2.6	5.0
Green Ext Time (p_c), s	0.0	1.7	0.0	0.8	0.0	1.8	0.0	0.6

Intersection Summary	
HCM 2010 Ctrl Delay	22.1
HCM 2010 LOS	C

Notes

Movement	EBL	EBT	EBR	WBL	WBT	WBR	NBL	NBT	NBR	SBL	SBT	SBR
Lane Configurations												
Traffic Volume (veh/h)	0	385	33	204	134	0	0	0	0	404	3	182
Future Volume (veh/h)	0	385	33	204	134	0	0	0	0	404	3	182
Number	5	2	12	1	6	16				7	4	14
Initial Q (Qb), veh	0	0	0	0	0	0				0	0	0
Ped-Bike Adj(A_pbT)	1.00		1.00	1.00		1.00				1.00		1.00
Parking Bus, Adj	1.00	1.00	1.00	1.00	1.00	1.00				1.00	1.00	1.00
Adj Sat Flow, veh/h/ln	0	1900	1900	1900	1900	0				1900	1900	1900
Adj Flow Rate, veh/h	0	438	28	232	152	0				459	3	134
Adj No. of Lanes	0	2	1	1	2	0				0	1	1
Peak Hour Factor	0.88	0.88	0.88	0.88	0.88	0.88				0.88	0.88	0.88
Percent Heavy Veh, %	0	0	0	0	0	0				0	0	0
Cap, veh/h	0	1628	728	258	2279	0				513	3	461
Arrive On Green	0.00	0.45	0.45	0.24	1.00	0.00				0.29	0.29	0.29
Sat Flow, veh/h	0	3705	1615	1810	3705	0				1798	12	1615
Grp Volume(v), veh/h	0	438	28	232	152	0				462	0	134
Grp Sat Flow(s),veh/h/ln	0	1805	1615	1810	1805	0				1810	0	1615
Q Serve(g_s), s	0.0	9.1	1.2	14.9	0.0	0.0				29.4	0.0	7.8
Cycle Q Clear(g_c), s	0.0	9.1	1.2	14.9	0.0	0.0				29.4	0.0	7.8
Prop In Lane	0.00		1.00	1.00		0.00				0.99		1.00
Lane Grp Cap(c), veh/h	0	1628	728	258	2279	0				517	0	461
V/C Ratio(X)	0.00	0.27	0.04	0.90	0.07	0.00				0.89	0.00	0.29
Avail Cap(c_a), veh/h	0	1628	728	430	2279	0				724	0	646
HCM Platoon Ratio	1.00	1.00	1.00	1.67	1.67	1.00				1.00	1.00	1.00
Upstream Filter(I)	0.00	1.00	1.00	0.99	0.99	0.00				1.00	0.00	1.00
Uniform Delay (d), s/veh	0.0	20.6	18.4	44.8	0.0	0.0				41.1	0.0	33.4
Incr Delay (d2), s/veh	0.0	0.4	0.1	7.9	0.1	0.0				10.5	0.0	0.3
Initial Q Delay(d3),s/veh	0.0	0.0	0.0	0.0	0.0	0.0				0.0	0.0	0.0
%ile BackOfQ(50%),veh/ln	0.0	4.6	0.5	8.0	0.0	0.0				16.1	0.0	3.5
LnGrp Delay(d),s/veh	0.0	21.0	18.5	52.8	0.1	0.0				51.6	0.0	33.8
LnGrp LOS		C	B	D	A					D		C
Approach Vol, veh/h		466			384						596	
Approach Delay, s/veh		20.8			31.9						47.6	
Approach LOS		C			C						D	

Timer	1	2	3	4	5	6	7	8
Assigned Phs	1	2		4		6		
Phs Duration (G+Y+Rc), s	21.6	59.1		39.2		80.8		
Change Period (Y+Rc), s	4.5	5.0		5.0		5.0		
Max Green Setting (Gmax), s	28.5	29.0		48.0		62.0		
Max Q Clear Time (g_c+I1), s	16.9	11.1		31.4		2.0		
Green Ext Time (p_c), s	0.2	2.2		2.9		2.4		

Intersection Summary	
HCM 2010 Ctrl Delay	34.8
HCM 2010 LOS	C

Movement	EBL	EBT	EBR	WBL	WBT	WBR	NBL	NBT	NBR	SBL	SBT	SBR
Lane Configurations												
Traffic Volume (veh/h)	228	560	0	0	330	558	8	0	192	0	0	0
Future Volume (veh/h)	228	560	0	0	330	558	8	0	192	0	0	0
Number	5	2	12	1	6	16	3	8	18			
Initial Q (Qb), veh	0	0	0	0	0	0	0	0	0			
Ped-Bike Adj(A_pbT)	1.00		1.00	1.00		0.99	1.00		1.00			
Parking Bus, Adj	1.00	1.00	1.00	1.00	1.00	1.00	1.00	1.00	1.00			
Adj Sat Flow, veh/h/ln	1900	1900	0	0	1900	1900	1900	1900	1900			
Adj Flow Rate, veh/h	271	667	0	0	393	653	10	0	61			
Adj No. of Lanes	1	2	0	0	2	1	0	1	1			
Peak Hour Factor	0.84	0.84	0.84	0.84	0.84	0.84	0.84	0.84	0.84			
Percent Heavy Veh, %	0	0	0	0	0	0	0	0	0			
Cap, veh/h	295	2677	0	0	1983	876	317	0	283			
Arrive On Green	0.33	1.00	0.00	0.00	0.55	0.55	0.17	0.00	0.17			
Sat Flow, veh/h	1810	3705	0	0	3705	1595	1810	0	1615			
Grp Volume(v), veh/h	271	667	0	0	393	653	10	0	61			
Grp Sat Flow(s),veh/h/ln	1810	1805	0	0	1805	1595	1810	0	1615			
Q Serve(g_s), s	17.3	0.0	0.0	0.0	6.6	37.5	0.6	0.0	3.9			
Cycle Q Clear(g_c), s	17.3	0.0	0.0	0.0	6.6	37.5	0.6	0.0	3.9			
Prop In Lane	1.00		0.00	0.00		1.00	1.00		1.00			
Lane Grp Cap(c), veh/h	295	2677	0	0	1983	876	317	0	283			
V/C Ratio(X)	0.92	0.25	0.00	0.00	0.20	0.75	0.03	0.00	0.22			
Avail Cap(c_a), veh/h	490	2677	0	0	1983	876	317	0	283			
HCM Platoon Ratio	2.00	2.00	1.00	1.00	1.00	1.00	1.00	1.00	1.00			
Upstream Filter(I)	0.96	0.96	0.00	0.00	1.00	1.00	1.00	0.00	1.00			
Uniform Delay (d), s/veh	39.6	0.0	0.0	0.0	13.7	20.6	41.1	0.0	42.4			
Incr Delay (d2), s/veh	9.3	0.2	0.0	0.0	0.2	5.7	0.2	0.0	1.7			
Initial Q Delay(d3),s/veh	0.0	0.0	0.0	0.0	0.0	0.0	0.0	0.0	0.0			
%ile BackOfQ(50%),veh/ln	9.3	0.1	0.0	0.0	3.3	17.7	0.3	0.0	1.9			
LnGrp Delay(d),s/veh	49.0	0.2	0.0	0.0	13.9	26.4	41.3	0.0	44.2			
LnGrp LOS	D	A			B	C	D		D			
Approach Vol, veh/h		938			1046			71				
Approach Delay, s/veh		14.3			21.7			43.8				
Approach LOS		B			C			D				

Timer	1	2	3	4	5	6	7	8
Assigned Phs		2			5	6		8
Phs Duration (G+Y+Rc), s		94.0			23.1	70.9		26.0
Change Period (Y+Rc), s		5.0			3.5	5.0		5.0
Max Green Setting (Gmax), s		89.0			32.5	53.0		21.0
Max Q Clear Time (g_c+I1), s		2.0			19.3	39.5		5.9
Green Ext Time (p_c), s		6.5			0.3	5.0		0.1

Intersection Summary	
HCM 2010 Ctrl Delay	19.1
HCM 2010 LOS	B

Intersection	
Int Delay, s/veh	1.2

Movement	EBL	EBT	WBT	WBR	SBL	SBR
Traffic Vol, veh/h	20	732	802	6	14	85
Future Vol, veh/h	20	732	802	6	14	85
Conflicting Peds, #/hr	0	0	0	0	0	0
Sign Control	Free	Free	Free	Free	Stop	Stop
RT Channelized	-	None	-	None	-	None
Storage Length	-	-	-	0	0	-
Veh in Median Storage, #	-	0	0	-	0	-
Grade, %	-	0	0	-	0	-
Peak Hour Factor	88	88	88	88	88	88
Heavy Vehicles, %	0	0	0	0	0	0
Mvmt Flow	23	832	911	7	16	97

Major/Minor	Major1		Major2		Minor2	
Conflicting Flow All	911	0	-	0	1372	456
Stage 1	-	-	-	-	911	-
Stage 2	-	-	-	-	461	-
Critical Hdwy	4.1	-	-	-	6.8	6.9
Critical Hdwy Stg 1	-	-	-	-	5.8	-
Critical Hdwy Stg 2	-	-	-	-	5.8	-
Follow-up Hdwy	2.2	-	-	-	3.5	3.3
Pot Cap-1 Maneuver	756	-	-	-	*244	557
Stage 1	-	-	-	-	*357	-
Stage 2	-	-	-	-	*756	-
Platoon blocked, %		-	-	-	1	
Mov Cap-1 Maneuver	756	-	-	-	*230	557
Mov Cap-2 Maneuver	-	-	-	-	*230	-
Stage 1	-	-	-	-	*357	-
Stage 2	-	-	-	-	*713	-

Approach	EB	WB	SB
HCM Control Delay, s	0.6	0	15.2
HCM LOS			C

Minor Lane/Major Mvmt	EBL	EBT	WBT	WBR	SBLn1
Capacity (veh/h)	756	-	-	-	464
HCM Lane V/C Ratio	0.03	-	-	-	0.242
HCM Control Delay (s)	9.9	0.3	-	-	15.2
HCM Lane LOS	A	A	-	-	C
HCM 95th %tile Q(veh)	0.1	-	-	-	0.9

Notes			
~: Volume exceeds capacity	$: Delay exceeds 300s	+: Computation Not Defined	*: All major volume in platoon

Movement	EBL	EBT	EBR	WBL	WBT	WBR	NBL	NBT	NBR	SBL	SBT	SBR
Lane Configurations												
Traffic Volume (veh/h)	3	689	24	4	736	3	33	4	7	6	2	13
Future Volume (veh/h)	3	689	24	4	736	3	33	4	7	6	2	13
Number	5	2	12	1	6	16	3	8	18	7	4	14
Initial Q (Qb), veh	0	0	0	0	0	0	0	0	0	0	0	0
Ped-Bike Adj(A_pbT)	1.00		1.00	1.00		1.00	1.00		1.00	1.00		1.00
Parking Bus, Adj	1.00	1.00	1.00	1.00	1.00	1.00	1.00	1.00	1.00	1.00	1.00	1.00
Adj Sat Flow, veh/h/ln	1900	1900	1900	1900	1900	1900	1900	1900	1900	1900	1900	1900
Adj Flow Rate, veh/h	4	811	28	5	866	3	39	5	3	7	2	8
Adj No. of Lanes	1	2	1	1	2	1	0	1	0	0	1	1
Peak Hour Factor	0.85	0.85	0.85	0.85	0.85	0.85	0.85	0.85	0.85	0.85	0.85	0.85
Percent Heavy Veh, %	0	0	0	0	0	0	0	0	0	0	0	0
Cap, veh/h	10	1459	653	12	1463	655	576	72	39	555	150	665
Arrive On Green	0.01	0.40	0.40	0.01	0.41	0.41	0.41	0.41	0.41	0.41	0.41	0.41
Sat Flow, veh/h	1810	3610	1615	1810	3610	1615	1211	176	95	1164	364	1615
Grp Volume(v), veh/h	4	811	28	5	866	3	47	0	0	9	0	8
Grp Sat Flow(s),veh/h/ln	1810	1805	1615	1810	1805	1615	1482	0	0	1528	0	1615
Q Serve(g_s), s	0.2	14.7	0.9	0.2	16.0	0.1	1.1	0.0	0.0	0.0	0.0	0.2
Cycle Q Clear(g_c), s	0.2	14.7	0.9	0.2	16.0	0.1	1.5	0.0	0.0	0.2	0.0	0.2
Prop In Lane	1.00		1.00	1.00		1.00	0.83		0.06	0.78		1.00
Lane Grp Cap(c), veh/h	10	1459	653	12	1463	655	688	0	0	704	0	665
V/C Ratio(X)	0.42	0.56	0.04	0.42	0.59	0.00	0.07	0.00	0.00	0.01	0.00	0.01
Avail Cap(c_a), veh/h	106	1459	653	106	1463	655	688	0	0	704	0	665
HCM Platoon Ratio	1.00	1.00	1.00	1.00	1.00	1.00	1.00	1.00	1.00	1.00	1.00	1.00
Upstream Filter(I)	1.00	1.00	1.00	1.00	1.00	1.00	1.00	0.00	0.00	1.00	0.00	1.00
Uniform Delay (d), s/veh	42.1	19.5	15.4	42.1	19.8	15.1	15.1	0.0	0.0	14.8	0.0	14.8
Incr Delay (d2), s/veh	10.4	1.5	0.1	8.6	1.8	0.0	0.2	0.0	0.0	0.0	0.0	0.0
Initial Q Delay(d3),s/veh	0.0	0.0	0.0	0.0	0.0	0.0	0.0	0.0	0.0	0.0	0.0	0.0
%ile BackOfQ(50%),veh/ln	0.1	7.6	0.4	0.1	8.3	0.0	0.7	0.0	0.0	0.1	0.0	0.1
LnGrp Delay(d),s/veh	52.5	21.0	15.5	50.7	21.5	15.1	15.3	0.0	0.0	14.8	0.0	14.8
LnGrp LOS	D	C	B	D	C	B	B			B		B
Approach Vol, veh/h		843			874			47			17	
Approach Delay, s/veh		21.0			21.7			15.3			14.8	
Approach LOS		C			C			B			B	

Timer	1	2	3	4	5	6	7	8
Assigned Phs	1	2		4	5	6		8
Phs Duration (G+Y+Rc), s	4.8	40.1		40.1	4.7	40.2		40.1
Change Period (Y+Rc), s	* 4.2	5.8		5.1	* 4.2	5.8		5.1
Max Green Setting (Gmax), s	* 5	29.9		35.0	* 5	29.9		35.0
Max Q Clear Time (g_c+I1), s	2.2	16.7		2.2	2.2	18.0		3.5
Green Ext Time (p_c), s	0.0	6.3		0.2	0.0	5.9		0.2

Intersection Summary	
HCM 2010 Ctrl Delay	21.1
HCM 2010 LOS	C

Notes

Intersection	
Int Delay, s/veh	0

Movement	EBT	EBR	WBL	WBT	NBL	NBR
Traffic Vol, veh/h	685	2	0	728	0	3
Future Vol, veh/h	685	2	0	728	0	3
Conflicting Peds, #/hr	0	0	0	0	0	0
Sign Control	Free	Free	Free	Free	Stop	Stop
RT Channelized	-	None	-	None	-	None
Storage Length	-	-	-	-	-	0
Veh in Median Storage, #	0	-	-	0	0	-
Grade, %	0	-	-	0	0	-
Peak Hour Factor	87	87	87	87	87	87
Heavy Vehicles, %	0	0	0	0	0	0
Mvmt Flow	787	2	0	837	0	3

Major/Minor	Major1		Major2		Minor1	
Conflicting Flow All	0	0	790	0	1124	395
Stage 1	-	-	-	-	789	-
Stage 2	-	-	-	-	335	-
Critical Hdwy	-	-	5.3	-	5.7	7.1
Critical Hdwy Stg 1	-	-	-	-	6.6	-
Critical Hdwy Stg 2	-	-	-	-	6	-
Follow-up Hdwy	-	-	3.1	-	3.8	3.9
Pot Cap-1 Maneuver	-	-	821	-	*273	*793
Stage 1	-	-	-	-	*638	-
Stage 2	-	-	-	-	*795	-
Platoon blocked, %	-	-	1	-		1
Mov Cap-1 Maneuver	-	-	821	-	*273	*793
Mov Cap-2 Maneuver	-	-	-	-	*273	-
Stage 1	-	-	-	-	*638	-
Stage 2	-	-	-	-	*795	-

Approach	EB	WB	NB
HCM Control Delay, s	0	0	9.6
HCM LOS			A

Minor Lane/Major Mvmt	NBLn1	EBT	EBR	WBL	WBT
Capacity (veh/h)	793	-	-	821	-
HCM Lane V/C Ratio	0.004	-	-	-	-
HCM Control Delay (s)	9.6	-	-	0	-
HCM Lane LOS	A	-	-	A	-
HCM 95th %tile Q(veh)	0	-	-	0	-

Notes

~: Volume exceeds capacity $: Delay exceeds 300s +: Computation Not Defined *: All major volume in platoon

Movement	EBL	EBT	EBR	WBL	WBT	WBR	NBL	NBT	NBR	SBL	SBT	SBR
Lane Configurations												
Traffic Volume (veh/h)	17	80	252	98	24	33	96	276	59	64	222	56
Future Volume (veh/h)	17	80	252	98	24	33	96	276	59	64	222	56
Number	7	4	14	3	8	18	5	2	12	1	6	16
Initial Q (Qb), veh	0	0	0	0	0	0	0	0	0	0	0	0
Ped-Bike Adj(A_pbT)	1.00		1.00	1.00		0.96	1.00		0.99	1.00		1.00
Parking Bus, Adj	1.00	1.00	1.00	1.00	1.00	1.00	1.00	1.00	1.00	1.00	1.00	1.00
Adj Sat Flow, veh/h/ln	1900	1900	1900	1900	1900	1900	1900	1900	1900	1900	1900	1900
Adj Flow Rate, veh/h	22	105	162	129	32	10	126	363	44	84	292	42
Adj No. of Lanes	1	1	1	1	1	1	1	2	0	1	2	0
Peak Hour Factor	0.76	0.76	0.76	0.76	0.76	0.76	0.76	0.76	0.76	0.76	0.76	0.76
Percent Heavy Veh, %	0	0	0	0	0	0	0	0	0	0	0	0
Cap, veh/h	44	349	581	154	464	378	319	1350	162	108	873	124
Arrive On Green	0.02	0.18	0.18	0.09	0.24	0.24	0.18	0.42	0.42	0.06	0.28	0.28
Sat Flow, veh/h	1810	1900	1611	1810	1900	1546	1810	3240	390	1810	3173	452
Grp Volume(v), veh/h	22	105	162	129	32	10	126	201	206	84	165	169
Grp Sat Flow(s),veh/h/ln	1810	1900	1611	1810	1900	1546	1810	1805	1825	1810	1805	1819
Q Serve(g_s), s	1.0	3.8	1.2	5.6	1.0	0.4	4.9	5.8	5.9	3.7	5.8	5.9
Cycle Q Clear(g_c), s	1.0	3.8	1.2	5.6	1.0	0.4	4.9	5.8	5.9	3.7	5.8	5.9
Prop In Lane	1.00		1.00	1.00		1.00	1.00		0.21	1.00		0.25
Lane Grp Cap(c), veh/h	44	349	581	154	464	378	319	752	760	108	496	500
V/C Ratio(X)	0.50	0.30	0.28	0.84	0.07	0.03	0.39	0.27	0.27	0.78	0.33	0.34
Avail Cap(c_a), veh/h	120	570	768	154	606	493	319	752	760	143	496	500
HCM Platoon Ratio	1.00	1.00	1.00	1.00	1.00	1.00	1.00	1.00	1.00	1.00	1.00	1.00
Upstream Filter(I)	1.00	1.00	1.00	1.00	1.00	1.00	1.00	1.00	1.00	1.00	1.00	1.00
Uniform Delay (d), s/veh	38.6	28.2	6.4	36.1	23.2	23.0	29.2	15.3	15.3	37.1	23.1	23.2
Incr Delay (d2), s/veh	3.3	0.2	0.1	30.2	0.0	0.0	0.3	0.9	0.9	12.5	1.8	1.8
Initial Q Delay(d3),s/veh	0.0	0.0	0.0	0.0	0.0	0.0	0.0	0.0	0.0	0.0	0.0	0.0
%ile BackOfQ(50%),veh/ln	0.5	2.0	1.4	4.1	0.5	0.2	2.5	3.1	3.2	2.2	3.1	3.2
LnGrp Delay(d),s/veh	41.9	28.4	6.5	66.3	23.3	23.0	29.5	16.2	16.2	49.6	24.9	25.0
LnGrp LOS	D	C	A	E	C	C	C	B	B	D	C	C
Approach Vol, veh/h		289			171			533			418	
Approach Delay, s/veh		17.1			55.7			19.3			29.9	
Approach LOS		B			E			B			C	

Timer	1	2	3	4	5	6	7	8
Assigned Phs	1	2	3	4	5	6	7	8
Phs Duration (G+Y+Rc), s	9.0	39.5	11.0	20.5	20.3	28.2	6.1	25.4
Change Period (Y+Rc), s	* 4.2	6.2	* 4.2	5.8	6.2	* 6.2	* 4.2	5.8
Max Green Setting (Gmax), s	* 6.3	22.5	* 6.8	24.0	6.8	* 22	* 5.3	25.5
Max Q Clear Time (g_c+I1), s	5.7	7.9	7.6	5.8	6.9	7.9	3.0	3.0
Green Ext Time (p_c), s	0.0	1.2	0.0	0.6	0.0	0.8	0.0	0.6

Intersection Summary	
HCM 2010 Ctrl Delay	26.4
HCM 2010 LOS	C

Notes

Intersection	
Int Delay, s/veh	1

Movement	WBL	WBR	NBT	NBR	SBL	SBT
Traffic Vol, veh/h	38	13	441	47	15	508
Future Vol, veh/h	38	13	441	47	15	508
Conflicting Peds, #/hr	0	0	0	1	0	0
Sign Control	Stop	Stop	Free	Free	Free	Free
RT Channelized	-	None	-	None	-	None
Storage Length	210	0	-	-	120	-
Veh in Median Storage, #	2	-	0	-	-	0
Grade, %	0	-	0	-	-	0
Peak Hour Factor	77	77	77	77	77	77
Heavy Vehicles, %	0	0	0	0	0	0
Mvmt Flow	49	17	573	61	19	660

Major/Minor	Minor1		Major1		Major2	
Conflicting Flow All	1302	603	0	0	634	0
Stage 1	603	-	-	-	-	-
Stage 2	699	-	-	-	-	-
Critical Hdwy	6.4	6.2	-	-	4.1	-
Critical Hdwy Stg 1	5.4	-	-	-	-	-
Critical Hdwy Stg 2	5.4	-	-	-	-	-
Follow-up Hdwy	3.5	3.3	-	-	2.2	-
Pot Cap-1 Maneuver	133	503	-	-	959	-
Stage 1	550	-	-	-	-	-
Stage 2	511	-	-	-	-	-
Platoon blocked, %	1		-	-		-
Mov Cap-1 Maneuver	131	503	-	-	959	-
Mov Cap-2 Maneuver	299	-	-	-	-	-
Stage 1	550	-	-	-	-	-
Stage 2	500	-	-	-	-	-

Approach	WB	NB	SB
HCM Control Delay, s	17.6	0	0.3
HCM LOS	C		

Minor Lane/Major Mvmt	NBT	NBR	WBLn1	WBLn2	SBL	SBT
Capacity (veh/h)	-	-	299	503	959	-
HCM Lane V/C Ratio	-	-	0.165	0.034	0.02	-
HCM Control Delay (s)	-	-	19.4	12.4	8.8	-
HCM Lane LOS	-	-	C	B	A	-
HCM 95th %tile Q(veh)	-	-	0.6	0.1	0.1	-

Intersection	
Int Delay, s/veh	0.7

Movement	EBL	EBR	NBL	NBT	SBT	SBR
Traffic Vol, veh/h	18	28	14	470	537	9
Future Vol, veh/h	18	28	14	470	537	9
Conflicting Peds, #/hr	0	0	0	0	0	0
Sign Control	Stop	Stop	Free	Free	Free	Free
RT Channelized	-	None	-	None	-	None
Storage Length	0	-	100	-	-	0
Veh in Median Storage, #	2	-	-	0	0	-
Grade, %	0	-	-	0	0	-
Peak Hour Factor	92	92	92	92	92	92
Heavy Vehicles, %	0	0	0	0	0	0
Mvmt Flow	20	30	15	511	584	10

Major/Minor	Minor2		Major1		Major2	
Conflicting Flow All	1125	584	584	0	-	0
Stage 1	584	-	-	-	-	-
Stage 2	541	-	-	-	-	-
Critical Hdwy	6.4	6.2	4.1	-	-	-
Critical Hdwy Stg 1	5.4	-	-	-	-	-
Critical Hdwy Stg 2	5.4	-	-	-	-	-
Follow-up Hdwy	3.5	3.3	2.2	-	-	-
Pot Cap-1 Maneuver	*193	*657	*985	-	-	-
Stage 1	*619	-	-	-	-	-
Stage 2	*588	-	-	-	-	-
Platoon blocked, %	1	1	1	-	-	-
Mov Cap-1 Maneuver	*190	*657	*985	-	-	-
Mov Cap-2 Maneuver	*360	-	-	-	-	-
Stage 1	*619	-	-	-	-	-
Stage 2	*579	-	-	-	-	-

Approach	EB	NB	SB
HCM Control Delay, s	13.1	0.3	0
HCM LOS	B		

Minor Lane/Major Mvmt	NBL	NBT	EBLn1	SBT	SBR
Capacity (veh/h)	* 985	-	497	-	-
HCM Lane V/C Ratio	0.015	-	0.101	-	-
HCM Control Delay (s)	8.7	-	13.1	-	-
HCM Lane LOS	A	-	B	-	-
HCM 95th %tile Q(veh)	0	-	0.3	-	-

Notes

~: Volume exceeds capacity $: Delay exceeds 300s +: Computation Not Defined *: All major volume in platoon

Intersection	
Int Delay, s/veh	0.9

Movement	EBL	EBR	NBL	NBT	SBT	SBR
Traffic Vol, veh/h	6	58	31	478	563	2
Future Vol, veh/h	6	58	31	478	563	2
Conflicting Peds, #/hr	0	0	0	0	0	0
Sign Control	Stop	Stop	Free	Free	Free	Free
RT Channelized	-	None	-	None	-	None
Storage Length	0	-	100	-	-	0
Veh in Median Storage, #	2	-	-	0	0	-
Grade, %	0	-	-	0	0	-
Peak Hour Factor	92	92	92	92	92	92
Heavy Vehicles, %	0	0	0	0	0	0
Mvmt Flow	7	63	34	520	612	2

Major/Minor	Minor2		Major1		Major2	
Conflicting Flow All	1199	612	612	0	-	0
Stage 1	612	-	-	-	-	-
Stage 2	587	-	-	-	-	-
Critical Hdwy	6.4	6.2	4.1	-	-	-
Critical Hdwy Stg 1	5.4	-	-	-	-	-
Critical Hdwy Stg 2	5.4	-	-	-	-	-
Follow-up Hdwy	3.5	3.3	2.2	-	-	-
Pot Cap-1 Maneuver	*161	*618	*927	-	-	-
Stage 1	*583	-	-	-	-	-
Stage 2	*560	-	-	-	-	-
Platoon blocked, %	1	1	1	-	-	-
Mov Cap-1 Maneuver	*155	*618	*927	-	-	-
Mov Cap-2 Maneuver	*326	-	-	-	-	-
Stage 1	*583	-	-	-	-	-
Stage 2	*539	-	-	-	-	-

Approach	EB	NB	SB
HCM Control Delay, s	12.2	0.5	0
HCM LOS	B		

Minor Lane/Major Mvmt	NBL	NBT	EBLn1	SBT	SBR
Capacity (veh/h)	* 927	-	570	-	-
HCM Lane V/C Ratio	0.036	-	0.122	-	-
HCM Control Delay (s)	9	-	12.2	-	-
HCM Lane LOS	A	-	B	-	-
HCM 95th %tile Q(veh)	0.1	-	0.4	-	-

Notes			
~: Volume exceeds capacity	$: Delay exceeds 300s	+: Computation Not Defined	*: All major volume in platoon

Movement	EBL	EBT	EBR	WBL	WBT	WBR	NBL	NBT	NBR	SBL	SBT	SBR
Lane Configurations												
Traffic Volume (veh/h)	355	312	50	14	244	30	39	171	17	35	159	447
Future Volume (veh/h)	355	312	50	14	244	30	39	171	17	35	159	447
Number	5	2	12	1	6	16	3	8	18	7	4	14
Initial Q (Qb), veh	0	0	0	0	0	0	0	0	0	0	0	0
Ped-Bike Adj(A_pbT)	1.00		1.00	1.00		1.00	1.00		1.00	1.00		1.00
Parking Bus, Adj	1.00	1.00	1.00	1.00	1.00	1.00	1.00	1.00	1.00	1.00	1.00	1.00
Adj Sat Flow, veh/h/ln	1900	1900	1900	1900	1900	1900	1900	1900	1900	1900	1900	1900
Adj Flow Rate, veh/h	433	380	52	17	298	26	48	209	11	43	194	462
Adj No. of Lanes	1	3	1	1	3	0	2	2	1	1	2	0
Peak Hour Factor	0.82	0.82	0.82	0.82	0.82	0.82	0.82	0.82	0.82	0.82	0.82	0.82
Percent Heavy Veh, %	0	0	0	0	0	0	0	0	0	0	0	0
Cap, veh/h	1091	4701	1464	33	1495	128	119	1184	529	60	558	499
Arrive On Green	0.60	0.91	0.91	0.02	0.31	0.31	0.03	0.33	0.33	0.03	0.31	0.31
Sat Flow, veh/h	1810	5187	1615	1810	4867	418	3510	3610	1614	1810	1805	1615
Grp Volume(v), veh/h	433	380	52	17	210	114	48	209	11	43	194	462
Grp Sat Flow(s),veh/h/ln	1810	1729	1615	1810	1729	1826	1755	1805	1614	1810	1805	1615
Q Serve(g_s), s	13.7	0.8	1.5	1.0	4.9	5.1	1.5	4.5	0.5	2.6	9.2	30.5
Cycle Q Clear(g_c), s	13.7	0.8	1.5	1.0	4.9	5.1	1.5	4.5	0.5	2.6	9.2	30.5
Prop In Lane	1.00		1.00	1.00		0.23	1.00		1.00	1.00		1.00
Lane Grp Cap(c), veh/h	1091	4701	1464	33	1063	561	119	1184	529	60	558	499
V/C Ratio(X)	0.40	0.08	0.04	0.51	0.20	0.20	0.40	0.18	0.02	0.71	0.35	0.93
Avail Cap(c_a), veh/h	1091	4701	1464	86	1063	561	160	1184	529	82	558	499
HCM Platoon Ratio	1.00	1.00	1.00	1.00	1.00	1.00	1.00	1.00	1.00	1.00	1.00	1.00
Upstream Filter(I)	1.00	1.00	1.00	1.00	1.00	1.00	1.00	1.00	1.00	1.00	1.00	1.00
Uniform Delay (d), s/veh	11.4	0.5	10.1	53.5	28.1	28.1	52.0	26.4	25.0	52.7	29.4	36.8
Incr Delay (d2), s/veh	0.1	0.0	0.0	4.4	0.4	0.8	0.8	0.3	0.1	8.6	1.7	25.5
Initial Q Delay(d3),s/veh	0.0	0.0	0.0	0.0	0.0	0.0	0.0	0.0	0.0	0.0	0.0	0.0
%ile BackOfQ(50%),veh/ln	6.9	0.4	0.7	0.6	2.4	2.7	0.7	2.3	0.2	1.4	4.8	17.1
LnGrp Delay(d),s/veh	11.5	0.6	10.2	57.9	28.5	29.0	52.9	26.7	25.1	61.2	31.1	62.2
LnGrp LOS	B	A	B	E	C	C	D	C	C	E	C	E
Approach Vol, veh/h		865			341			268			699	
Approach Delay, s/veh		6.6			30.1			31.3			53.5	
Approach LOS		A			C			C			D	

Timer	1	2	3	4	5	6	7	8
Assigned Phs	1	2	3	4	5	6	7	8
Phs Duration (G+Y+Rc), s	6.2	106.1	9.1	40.2	72.8	39.6	7.9	41.5
Change Period (Y+Rc), s	* 4.2	5.8	5.4	* 6.2	5.8	* 5.8	* 4.2	5.4
Max Green Setting (Gmax), s	* 5.2	45.4	5.0	* 34	16.8	* 34	* 5	34.8
Max Q Clear Time (g_c+I1), s	3.0	3.5	3.5	32.5	15.7	7.1	4.6	6.5
Green Ext Time (p_c), s	0.0	2.1	0.0	0.5	0.2	1.1	0.0	0.9

Intersection Summary	
HCM 2010 Ctrl Delay	28.4
HCM 2010 LOS	C

Notes

APPENDIX 5.2:

E+P CONDITIONS OFF-RAMP QUEUING ANALYSIS WORKSHEETS

This Page Intentionally Left Blank

1: I-215 SB On Ramp/I-215 SB Off Ramp & Harley Knox Blvd./Harley Knox. Blvd.

1/6/2016

Lane Group	EBT	EBR	WBL	WBT	SBT	SBR
Lane Group Flow (vph)	612	11	193	226	472	154
v/c Ratio	0.39	0.02	0.75	0.10	0.85	0.26
Control Delay	26.8	0.0	74.2	11.7	53.4	5.1
Queue Delay	0.0	0.0	0.3	0.0	0.0	0.0
Total Delay	26.8	0.0	74.5	11.7	53.4	5.1
Queue Length 50th (ft)	171	0	160	33	338	0
Queue Length 95th (ft)	267	0	237	67	431	43
Internal Link Dist (ft)	844			267	1109	
Turn Bay Length (ft)		100	80			270
Base Capacity (vph)	1550	727	368	2201	679	701
Starvation Cap Reductn	0	0	18	0	0	0
Spillback Cap Reductn	0	0	0	0	0	0
Storage Cap Reductn	0	0	0	0	0	0
Reduced v/c Ratio	0.39	0.02	0.55	0.10	0.70	0.22

Intersection Summary

Lane Group	EBL	EBT	WBT	WBR	NBT	NBR
Lane Group Flow (vph)	362	769	424	600	19	130
v/c Ratio	0.84	0.27	0.23	0.56	0.07	0.38
Control Delay	51.1	3.2	18.0	6.4	45.6	11.3
Queue Delay	0.4	0.4	0.0	0.0	0.0	0.0
Total Delay	51.5	3.5	18.0	6.4	45.6	11.3
Queue Length 50th (ft)	88	34	93	41	13	0
Queue Length 95th (ft)	180	84	140	131	35	52
Internal Link Dist (ft)		267	594		929	
Turn Bay Length (ft)	60			100		265
Base Capacity (vph)	594	2797	1829	1063	259	340
Starvation Cap Reductn	38	1353	0	0	0	0
Spillback Cap Reductn	0	0	0	0	0	0
Storage Cap Reductn	0	0	0	0	0	0
Reduced v/c Ratio	0.65	0.53	0.23	0.56	0.07	0.38

Intersection Summary

Lane Group	EBT	EBR	WBL	WBT	SBT	SBR
Lane Group Flow (vph)	438	38	232	152	462	207
v/c Ratio	0.30	0.06	0.78	0.07	0.82	0.32
Control Delay	27.7	3.8	73.8	11.6	50.4	4.7
Queue Delay	0.0	0.0	0.5	0.0	0.0	0.0
Total Delay	27.7	3.8	74.3	11.6	50.4	4.7
Queue Length 50th (ft)	120	0	193	22	330	0
Queue Length 95th (ft)	195	14	271	48	395	45
Internal Link Dist (ft)	844			267	1109	
Turn Bay Length (ft)		100	80			270
Base Capacity (vph)	1460	688	428	2190	724	770
Starvation Cap Reductn	0	0	34	0	0	0
Spillback Cap Reductn	0	0	0	0	0	0
Storage Cap Reductn	0	0	0	0	0	0
Reduced v/c Ratio	0.30	0.06	0.59	0.07	0.64	0.27

Intersection Summary

Lane Group	EBL	EBT	WBT	WBR	NBT	NBR
Lane Group Flow (vph)	271	667	393	664	10	229
v/c Ratio	0.80	0.25	0.21	0.59	0.03	0.49
Control Delay	53.9	2.7	16.4	4.8	41.5	9.3
Queue Delay	0.2	0.3	0.0	0.0	0.0	0.0
Total Delay	54.1	3.0	16.4	4.8	41.5	9.3
Queue Length 50th (ft)	65	13	82	20	7	0
Queue Length 95th (ft)	146	57	118	64	21	53
Internal Link Dist (ft)		267	594		929	
Turn Bay Length (ft)	60			100		265
Base Capacity (vph)	488	2677	1896	1127	315	471
Starvation Cap Reductn	19	1340	0	0	0	0
Spillback Cap Reductn	0	0	69	0	0	0
Storage Cap Reductn	0	0	0	0	0	0
Reduced v/c Ratio	0.58	0.50	0.22	0.59	0.03	0.49

Intersection Summary

APPENDIX 5.3:

E+P CONDITIONS TRAFFIC SIGNAL WARRANT ANALYSIS WORKSHEETS

This Page Intentionally Left Blank

Figure 4C-4. Warrant 3, Peak Hour (70% Factor)

(COMMUNITY LESS THAN 10,000 POPULATION OR ABOVE 64 km/h OR ABOVE 40 mph ON MAJOR STREET)

Traffic Conditions = **E+P Conditions - Weekday PM Peak Hour**

Major Street Name = **Indian Street**

Total of Both Approaches (VPH) = **1011**
Number of Approach Lanes Major Street = **1**

Minor Street Name = **Grove View Road**

High Volume Approach (VPH) = **51**
Number of Approach Lanes Minor Street = **1**

SIGNAL WARRANT NOT SATISFIED

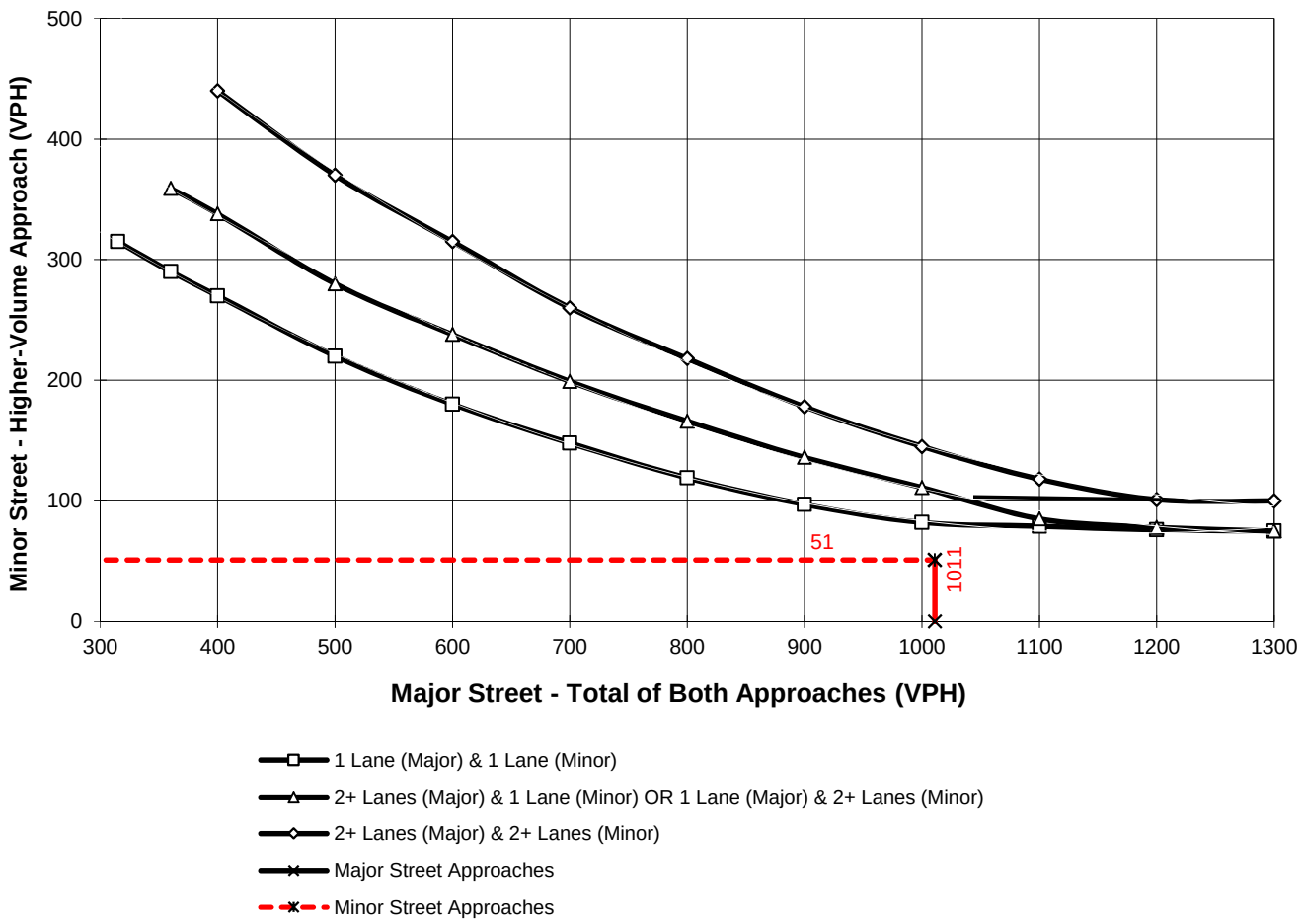

*Note: 100 vph applies as the lower threshold for a minor-street approach with two or more lanes and 75 vph applies as the lower threshold for a minor-street approach with one lane

Figure 4C-4. Warrant 3, Peak Hour (70% Factor)

(COMMUNITY LESS THAN 10,000 POPULATION OR ABOVE 64 km/h OR ABOVE 40 mph ON MAJOR STREET)

Traffic Conditions = **E+P Conditions - Weekday PM Peak Hour**

Major Street Name = **Indian Street**

Total of Both Approaches (VPH) = **1030**
Number of Approach Lanes Major Street = **1**

Minor Street Name = **Driveway 1**

High Volume Approach (VPH) = **46**
Number of Approach Lanes Minor Street = **1**

SIGNAL WARRANT NOT SATISFIED

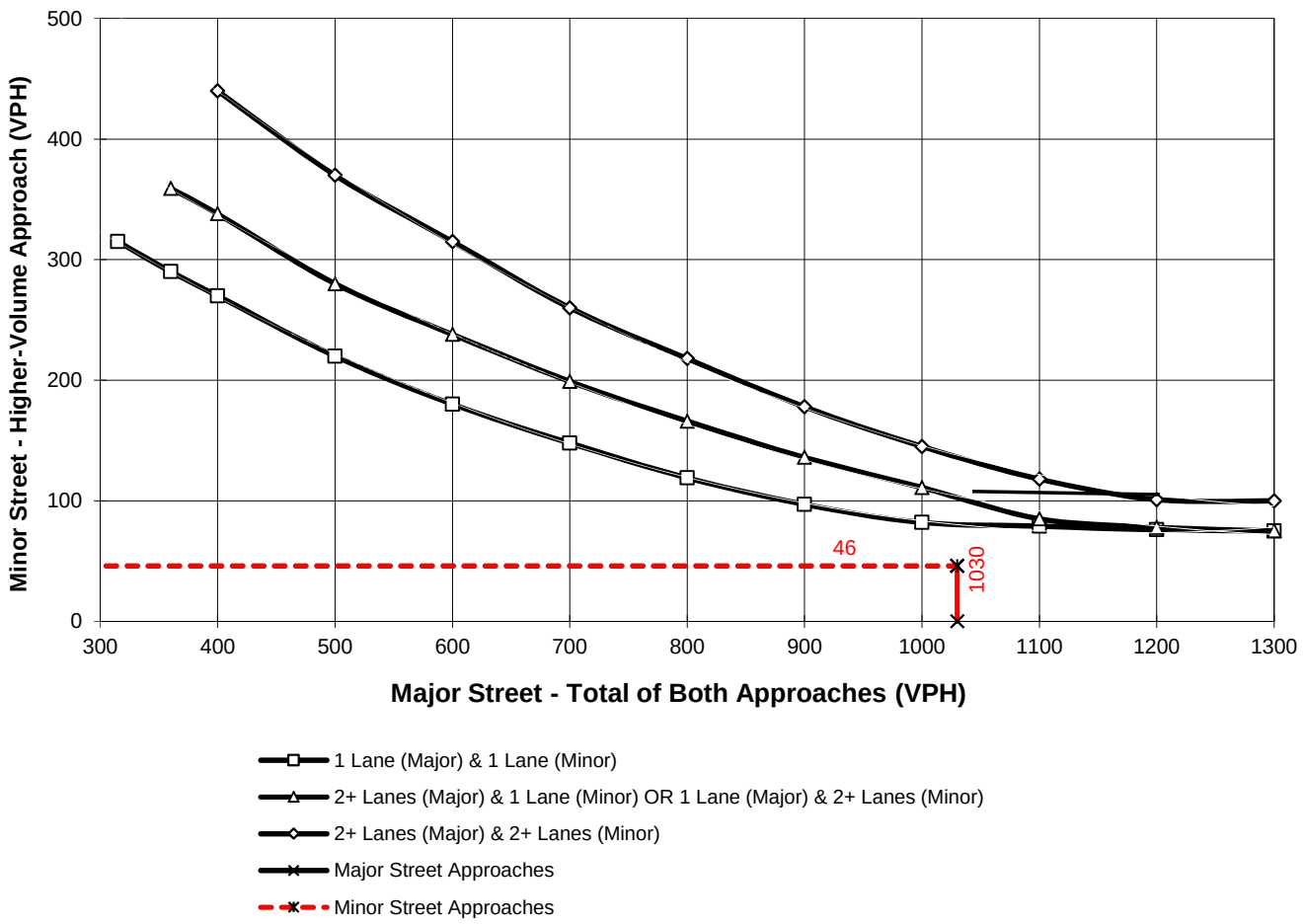

*Note: 100 vph applies as the lower threshold for a minor-street approach with two or more lanes and 75 vph applies as the lower threshold for a minor-street approach with one lane

Figure 4C-103 (CA). Traffic Signal Warrants Worksheet
(Average Traffic Estimate Form)

___	___	___	___		TRAFFIC CONDITIONS		**E+P**
DIST	CO	RTE	PM	CALC	BB	DATE	01/05/16
Jurisdiction:	**City of Moreno Valley**			CHK	CHS	DATE	01/05/16
Major Street:	**Indian Street**				Critical Approach Speed (Major)		50 mph
Minor Street:	**Driveway 1**				Critical Approach Speed (Minor)		25 mph

Major Street Approach Lanes = **1** lane Minor Street Approach Lanes **1** lane

Major Street Future ADT = **13,224** vpd Minor Street Future ADT = **290** vpd

Speed limit or critical speed on major street traffic > 64 km/h (40 mph); ……... [√]

or **RURAL (R)**

In built up area of isolated community of < 10,000 population …….. [ ]

(Based on Estimated Average Daily Traffic - See Note)

URBAN	RURAL	Minimum Requirements EADT			
	XX				
CONDITION A - Minimum Vehicular Volume					
Satisfied	Not Satisfied				
	XX				
Number of lanes for moving traffic on each approach		Vehicles Per Day on Major Street (Total of Both Approaches)		Vehicles Per Day on Higher-Volume Minor Street Approach (One Direction Only)	
Major Street	Minor Street	Urban	Rural	Urban	Rural
1 **13,224**	*1* **290**	8,000	5,600 *	2,400	1,680
2 +	*1*	9,600	6,720	2,400	1,680
2 +	*2 +*	9,600	6,720	3,200	2,240
1	*2 +*	8,000	5,600	3,200	2,240
CONDITION B - Interruption of Continuous Traffic					
Satisfied	Not Satisfied				
	XX				
Number of lanes for moving traffic on each approach		Vehicles Per Day on Major Street (Total of Both Approaches)		Vehicles Per Day on Higher-Volume Minor Street Approach (One Direction Only)	
Major Street	Minor Street	Urban	Rural	Urban	Rural
1 **13,224**	*1* **290**	12,000	8,400 *	1,200	850
2 +	*1*	14,400	10,080	1,200	850
2 +	*2 +*	14,400	10,080	1,600	1,120
1	*2 +*	12,000	8,400	1,600	1,120
Combination of CONDITIONS A + B					
Satisfied	Not Satisfied				
	XX	2 CONDITIONS 80%		2 CONDITIONS 80%	
No one condition satisfied, but following conditions fulfilled 80% of more …..	**A** 17% / **B** 34%				

Note: To be used only for NEW INTERSECTIONS or other locations where it is not reasonable to count actual traffic volumes.

The satisfaction of a traffic signal warrant or warrants shall not in itself require the installation of a traffic control signal.

Figure 4C-4. Warrant 3, Peak Hour (70% Factor)

(COMMUNITY LESS THAN 10,000 POPULATION OR ABOVE 64 km/h OR ABOVE 40 mph ON MAJOR STREET)

Traffic Conditions = **E+P Conditions - Weekday AM Peak Hour**

Major Street Name = **Indian Street**

Total of Both Approaches (VPH) = **709**
Number of Approach Lanes Major Street = **1**

Minor Street Name = **Driveway 1**

High Volume Approach (VPH) = **64**
Number of Approach Lanes Minor Street = **1**

SIGNAL WARRANT NOT SATISFIED

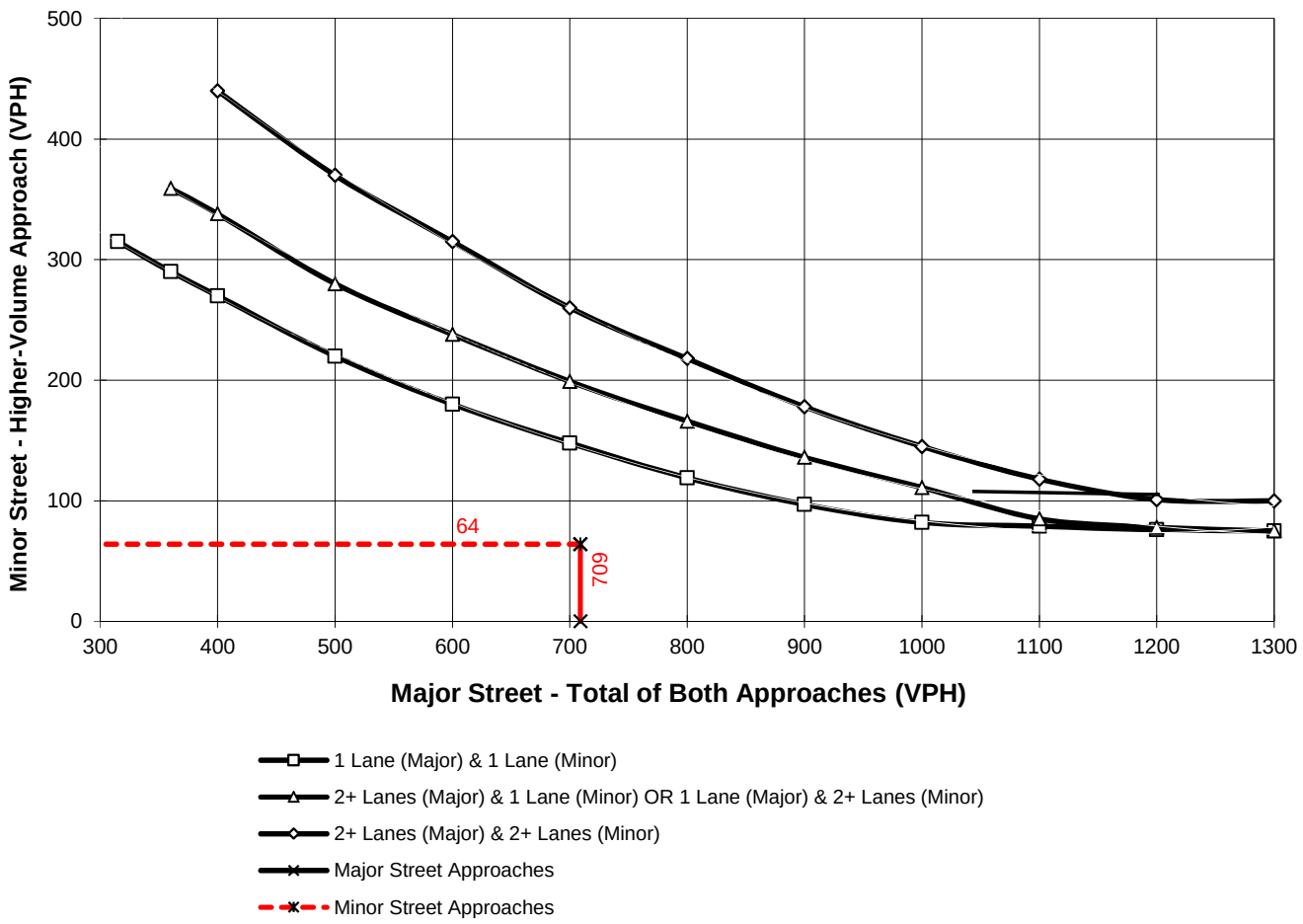

*Note: 100 vph applies as the lower threshold for a minor-street approach with two or more lanes and 75 vph applies as the lower threshold for a minor-street approach with one lane

Figure 4C-103 (CA). Traffic Signal Warrants Worksheet
(Average Traffic Estimate Form)

___	___	___	___		TRAFFIC CONDITIONS		**E+P**
DIST	CO	RTE	PM	CALC	BB	DATE	01/05/16
Jurisdiction:	**City of Moreno Valley**			CHK	CHS	DATE	01/05/16
Major Street:	**Indian Street**				Critical Approach Speed (Major)		50 mph
Minor Street:	**Driveway 2**				Critical Approach Speed (Minor)		25 mph

Major Street Approach Lanes = **1** lane Minor Street Approach Lanes **1** lane

Major Street Future ADT = **13,662** vpd Minor Street Future ADT = **447** vpd

Speed limit or critical speed on major street traffic > 64 km/h (40 mph); ……... [√]

or **RURAL (R)**

In built up area of isolated community of < 10,000 population …….…… [ ]

(Based on Estimated Average Daily Traffic - See Note)

URBAN	RURAL	Minimum Requirements EADT			
	XX				
CONDITION A - Minimum Vehicular Volume					
Satisfied	Not Satisfied	Vehicles Per Day on Major Street (Total of Both Approaches)		Vehicles Per Day on Higher-Volume Minor Street Approach (One Direction Only)	
	XX				
Number of lanes for moving traffic on each approach					
Major Street	Minor Street	Urban	Rural	Urban	Rural
1 **13,662**	*1* **447**	8,000	5,600 *	2,400	1,680
2 +	*1*	9,600	6,720	2,400	1,680
2 +	*2 +*	9,600	6,720	3,200	2,240
1	*2 +*	8,000	5,600	3,200	2,240
CONDITION B - Interruption of Continuous Traffic					
Satisfied	Not Satisfied	Vehicles Per Day on Major Street (Total of Both Approaches)		Vehicles Per Day on Higher-Volume Minor Street Approach (One Direction Only)	
	XX				
Number of lanes for moving traffic on each approach					
Major Street	Minor Street	Urban	Rural	Urban	Rural
1 **13,662**	*1* **447**	12,000	8,400 *	1,200	850
2 +	*1*	14,400	10,080	1,200	850
2 +	*2 +*	14,400	10,080	1,600	1,120
1	*2 +*	12,000	8,400	1,600	1,120
Combination of CONDITIONS A + B					
Satisfied	Not Satisfied	2 CONDITIONS 80%		2 CONDITIONS 80%	
	XX				
No one condition satisfied, but following conditions fulfilled 80% of more …..	**A** 27% / **B** 53%				

Note: To be used only for NEW INTERSECTIONS or other locations where it is not reasonable to count actual traffic volumes.

The satisfaction of a traffic signal warrant or warrants shall not in itself require the installation of a traffic control signal.

This Page Intentionally Left Blank

APPENDIX 6.1:

OPENING YEAR CUMULATIVE (2020) WITHOUT PROJECT CONDITIONS INTERSECTION OPERATIONS ANALYSIS WORKSHEETS

This Page Intentionally Left Blank

Movement	EBL	EBT	EBR	WBL	WBT	WBR	NBL	NBT	NBR	SBL	SBT	SBR
Lane Configurations												
Traffic Volume (veh/h)	0	717	44	306	335	0	0	0	0	1511	3	369
Future Volume (veh/h)	0	717	44	306	335	0	0	0	0	1511	3	369
Number	5	2	12	1	6	16				7	4	14
Initial Q (Qb), veh	0	0	0	0	0	0				0	0	0
Ped-Bike Adj(A_pbT)	1.00		1.00	1.00		1.00				1.00		1.00
Parking Bus, Adj	1.00	1.00	1.00	1.00	1.00	1.00				1.00	1.00	1.00
Adj Sat Flow, veh/h/ln	0	1900	1900	1900	1900	0				1900	1900	1900
Adj Flow Rate, veh/h	0	788	45	336	368	0				1660	3	340
Adj No. of Lanes	0	2	1	1	2	0				0	1	1
Peak Hour Factor	0.91	0.91	0.91	0.91	0.91	0.91				0.91	0.91	0.91
Percent Heavy Veh, %	0	0	0	0	0	0				0	0	0
Cap, veh/h	0	722	323	467	1805	0				1009	2	902
Arrive On Green	0.00	0.20	0.20	0.52	1.00	0.00				0.56	0.56	0.56
Sat Flow, veh/h	0	3705	1615	1810	3705	0				1806	3	1615
Grp Volume(v), veh/h	0	788	45	336	368	0				1663	0	340
Grp Sat Flow(s),veh/h/ln	0	1805	1615	1810	1805	0				1810	0	1615
Q Serve(g_s), s	0.0	24.0	2.8	17.1	0.0	0.0				67.0	0.0	14.1
Cycle Q Clear(g_c), s	0.0	24.0	2.8	17.1	0.0	0.0				67.0	0.0	14.1
Prop In Lane	0.00		1.00	1.00		0.00				1.00		1.00
Lane Grp Cap(c), veh/h	0	722	323	467	1805	0				1010	0	902
V/C Ratio(X)	0.00	1.09	0.14	0.72	0.20	0.00				1.65	0.00	0.38
Avail Cap(c_a), veh/h	0	722	323	467	1805	0				1010	0	902
HCM Platoon Ratio	1.00	1.00	1.00	2.00	2.00	1.00				1.00	1.00	1.00
Upstream Filter(I)	0.00	1.00	1.00	0.88	0.88	0.00				1.00	0.00	1.00
Uniform Delay (d), s/veh	0.0	48.0	39.5	25.6	0.0	0.0				26.5	0.0	14.8
Incr Delay (d2), s/veh	0.0	61.2	0.9	4.0	0.2	0.0				295.1	0.0	0.3
Initial Q Delay(d3),s/veh	0.0	0.0	0.0	0.0	0.0	0.0				0.0	0.0	0.0
%ile BackOfQ(50%),veh/ln	0.0	18.1	1.3	8.9	0.1	0.0				115.9	0.0	6.3
LnGrp Delay(d),s/veh	0.0	109.2	40.4	29.7	0.2	0.0				321.6	0.0	15.1
LnGrp LOS		F	D	C	A					F		B
Approach Vol, veh/h		833			704						2003	
Approach Delay, s/veh		105.4			14.3						269.6	
Approach LOS		F			B						F	

Timer	1	2	3	4	5	6	7	8
Assigned Phs	1	2		4		6		
Phs Duration (G+Y+Rc), s	36.5	29.0		72.0		65.5		
Change Period (Y+Rc), s	5.0	* 5		5.0		5.0		
Max Green Setting (Gmax), s	14.5	* 24		67.0		43.0		
Max Q Clear Time (g_c+I1), s	19.1	26.0		69.0		2.0		
Green Ext Time (p_c), s	0.0	0.0		0.0		1.8		

Intersection Summary	
HCM 2010 Ctrl Delay	180.2
HCM 2010 LOS	F

Notes

Movement	EBL	EBT	EBR	WBL	WBT	WBR	NBL	NBT	NBR	SBL	SBT	SBR
Lane Configurations												
Traffic Volume (veh/h)	438	1790	0	0	547	842	93	4	406	0	0	0
Future Volume (veh/h)	438	1790	0	0	547	842	93	4	406	0	0	0
Number	5	2	12	1	6	16	3	8	18			
Initial Q (Qb), veh	0	0	0	0	0	0	0	0	0			
Ped-Bike Adj(A_pbT)	1.00		1.00	1.00		1.00	1.00		1.00			
Parking Bus, Adj	1.00	1.00	1.00	1.00	1.00	1.00	1.00	1.00	1.00			
Adj Sat Flow, veh/h/ln	1900	1900	0	0	1900	1900	1900	1900	1900			
Adj Flow Rate, veh/h	503	2057	0	0	629	942	107	5	413			
Adj No. of Lanes	1	2	0	0	2	1	0	1	1			
Peak Hour Factor	0.87	0.87	0.87	0.87	0.87	0.87	0.87	0.87	0.87			
Percent Heavy Veh, %	0	0	0	0	0	0	0	0	0			
Cap, veh/h	613	2698	0	0	1324	592	433	20	404			
Arrive On Green	0.68	1.00	0.00	0.00	0.37	0.37	0.25	0.25	0.25			
Sat Flow, veh/h	1810	3705	0	0	3705	1615	1732	81	1615			
Grp Volume(v), veh/h	503	2057	0	0	629	942	112	0	413			
Grp Sat Flow(s),veh/h/ln	1810	1805	0	0	1805	1615	1813	0	1615			
Q Serve(g_s), s	24.2	0.0	0.0	0.0	16.0	44.0	5.9	0.0	30.0			
Cycle Q Clear(g_c), s	24.2	0.0	0.0	0.0	16.0	44.0	5.9	0.0	30.0			
Prop In Lane	1.00		0.00	0.00		1.00	0.96		1.00			
Lane Grp Cap(c), veh/h	613	2698	0	0	1324	592	453	0	404			
V/C Ratio(X)	0.82	0.76	0.00	0.00	0.48	1.59	0.25	0.00	1.02			
Avail Cap(c_a), veh/h	613	2698	0	0	1324	592	453	0	404			
HCM Platoon Ratio	2.00	2.00	1.00	1.00	1.00	1.00	1.00	1.00	1.00			
Upstream Filter(I)	0.09	0.09	0.00	0.00	1.00	1.00	1.00	0.00	1.00			
Uniform Delay (d), s/veh	16.7	0.0	0.0	0.0	29.1	38.0	36.0	0.0	45.0			
Incr Delay (d2), s/veh	0.8	0.2	0.0	0.0	1.2	273.8	1.3	0.0	50.7			
Initial Q Delay(d3),s/veh	0.0	0.0	0.0	0.0	0.0	0.0	0.0	0.0	0.0			
%ile BackOfQ(50%),veh/ln	11.9	0.1	0.0	0.0	8.2	64.6	3.1	0.0	19.0			
LnGrp Delay(d),s/veh	17.5	0.2	0.0	0.0	30.4	311.8	37.3	0.0	95.8			
LnGrp LOS	B	A			C	F	D		F			
Approach Vol, veh/h		2560			1571			525				
Approach Delay, s/veh		3.6			199.1			83.3				
Approach LOS		A			F			F				

Timer	1	2	3	4	5	6	7	8
Assigned Phs		2			5	6		8
Phs Duration (G+Y+Rc), s		94.7			45.7	49.0		35.0
Change Period (Y+Rc), s		5.0			5.0	* 5		5.0
Max Green Setting (Gmax), s		80.0			32.5	* 44		30.0
Max Q Clear Time (g_c+I1), s		2.0			26.2	46.0		32.0
Green Ext Time (p_c), s		20.0			4.8	0.0		0.0

Intersection Summary	
HCM 2010 Ctrl Delay	78.5
HCM 2010 LOS	E

Notes

Intersection	
Int Delay, s/veh	21.7

Movement	EBL	EBT	WBT	WBR	SBL	SBR
Traffic Vol, veh/h	75	2122	1315	29	2	75
Future Vol, veh/h	75	2122	1315	29	2	75
Conflicting Peds, #/hr	0	0	0	0	0	0
Sign Control	Free	Free	Free	Free	Stop	Stop
RT Channelized	-	None	-	None	-	None
Storage Length	-	-	-	0	0	-
Veh in Median Storage, #	-	0	0	-	0	-
Grade, %	-	0	0	-	0	-
Peak Hour Factor	82	82	82	82	82	82
Heavy Vehicles, %	0	0	0	0	0	0
Mvmt Flow	91	2588	1604	35	2	91

Major/Minor	Major1		Major2		Minor2	
Conflicting Flow All	1604	0	-	0	3081	802
Stage 1	-	-	-	-	1604	-
Stage 2	-	-	-	-	1477	-
Critical Hdwy	4.1	-	-	-	6.8	6.9
Critical Hdwy Stg 1	-	-	-	-	5.8	-
Critical Hdwy Stg 2	-	-	-	-	5.8	-
Follow-up Hdwy	2.2	-	-	-	3.5	3.3
Pot Cap-1 Maneuver	413	-	-	-	*~ 1	331
Stage 1	-	-	-	-	*153	-
Stage 2	-	-	-	-	*199	-
Platoon blocked, %		-	-	-	1	
Mov Cap-1 Maneuver	413	-	-	-	*~ 1	331
Mov Cap-2 Maneuver	-	-	-	-	*~ 1	-
Stage 1	-	-	-	-	*153	-
Stage 2	-	-	-	-	*199	-

Approach	EB	WB	SB
HCM Control Delay, s	0.6	0	$ 1003.8
HCM LOS			F

Minor Lane/Major Mvmt	EBL	EBT	WBT	WBR	SBLn1
Capacity (veh/h)	413	-	-	-	35
HCM Lane V/C Ratio	0.221	-	-	-	2.683
HCM Control Delay (s)	16.2	0	-		$ 1003.8
HCM Lane LOS	C	A	-	-	F
HCM 95th %tile Q(veh)	0.8	-	-	-	10.7

Notes			
~: Volume exceeds capacity	$: Delay exceeds 300s	+: Computation Not Defined	*: All major volume in platoon

Movement	EBL	EBT	EBR	WBL	WBT	WBR	NBL	NBT	NBR	SBL	SBT	SBR
Lane Configurations												
Traffic Volume (veh/h)	87	1953	12	12	1190	15	99	2	37	3	4	20
Future Volume (veh/h)	87	1953	12	12	1190	15	99	2	37	3	4	20
Number	5	2	12	1	6	16	3	8	18	7	4	14
Initial Q (Qb), veh	0	0	0	0	0	0	0	0	0	0	0	0
Ped-Bike Adj(A_pbT)	1.00		1.00	1.00		1.00	1.00		1.00	1.00		1.00
Parking Bus, Adj	1.00	1.00	1.00	1.00	1.00	1.00	1.00	1.00	1.00	1.00	1.00	1.00
Adj Sat Flow, veh/h/ln	1900	1900	1900	1900	1900	1900	1900	1900	1900	1900	1900	1900
Adj Flow Rate, veh/h	106	2382	13	15	1451	18	121	2	40	4	5	22
Adj No. of Lanes	1	2	1	1	2	1	0	1	0	0	1	1
Peak Hour Factor	0.82	0.82	0.82	0.82	0.82	0.82	0.82	0.82	0.82	0.82	0.82	0.82
Percent Heavy Veh, %	0	0	0	0	0	0	0	0	0	0	0	0
Cap, veh/h	131	2044	914	30	1842	824	361	13	105	241	287	471
Arrive On Green	0.07	0.57	0.57	0.02	0.51	0.51	0.29	0.29	0.29	0.29	0.29	0.29
Sat Flow, veh/h	1810	3610	1615	1810	3610	1615	1060	45	359	679	985	1615
Grp Volume(v), veh/h	106	2382	13	15	1451	18	163	0	0	9	0	22
Grp Sat Flow(s),veh/h/ln	1810	1805	1615	1810	1805	1615	1464	0	0	1664	0	1615
Q Serve(g_s), s	6.9	67.9	0.4	1.0	39.5	0.7	9.8	0.0	0.0	0.0	0.0	1.2
Cycle Q Clear(g_c), s	6.9	67.9	0.4	1.0	39.5	0.7	10.5	0.0	0.0	0.4	0.0	1.2
Prop In Lane	1.00		1.00	1.00		1.00	0.74		0.25	0.44		1.00
Lane Grp Cap(c), veh/h	131	2044	914	30	1842	824	479	0	0	529	0	471
V/C Ratio(X)	0.81	1.17	0.01	0.51	0.79	0.02	0.34	0.00	0.00	0.02	0.00	0.05
Avail Cap(c_a), veh/h	157	2044	914	75	1842	824	479	0	0	529	0	471
HCM Platoon Ratio	1.00	1.00	1.00	1.00	1.00	1.00	1.00	1.00	1.00	1.00	1.00	1.00
Upstream Filter(I)	1.00	1.00	1.00	1.00	1.00	1.00	1.00	0.00	0.00	1.00	0.00	1.00
Uniform Delay (d), s/veh	54.8	26.0	11.4	58.5	24.1	14.6	33.8	0.0	0.0	30.2	0.0	30.5
Incr Delay (d2), s/veh	19.3	80.3	0.0	4.9	3.5	0.0	1.9	0.0	0.0	0.1	0.0	0.2
Initial Q Delay(d3),s/veh	0.0	0.0	0.0	0.0	0.0	0.0	0.0	0.0	0.0	0.0	0.0	0.0
%ile BackOfQ(50%),veh/ln	4.2	56.3	0.2	0.5	20.4	0.3	4.6	0.0	0.0	0.2	0.0	0.6
LnGrp Delay(d),s/veh	74.1	106.3	11.4	63.4	27.6	14.6	35.7	0.0	0.0	30.3	0.0	30.7
LnGrp LOS	E	F	B	E	C	B	D			C		C
Approach Vol, veh/h		2501			1484			163			31	
Approach Delay, s/veh		104.4			27.8			35.7			30.6	
Approach LOS		F			C			D			C	

Timer	1	2	3	4	5	6	7	8
Assigned Phs	1	2		4	5	6		8
Phs Duration (G+Y+Rc), s	6.2	73.7		40.1	12.9	67.0		40.1
Change Period (Y+Rc), s	* 4.2	5.8		5.1	* 4.2	5.8		5.1
Max Green Setting (Gmax), s	* 5	64.9		35.0	* 10	59.5		35.0
Max Q Clear Time (g_c+I1), s	3.0	69.9		3.2	8.9	41.5		12.5
Green Ext Time (p_c), s	0.0	0.0		0.7	0.0	16.4		0.6

Intersection Summary	
HCM 2010 Ctrl Delay	74.0
HCM 2010 LOS	E

Notes

Intersection	
Int Delay, s/veh	0

Movement	EBT	EBR	WBL	WBT	NBL	NBR
Traffic Vol, veh/h	1955	31	0	1217	0	5
Future Vol, veh/h	1955	31	0	1217	0	5
Conflicting Peds, #/hr	0	0	0	0	0	0
Sign Control	Free	Free	Free	Free	Stop	Stop
RT Channelized	-	None	-	None	-	None
Storage Length	-	-	-	-	-	0
Veh in Median Storage, #	0	-	-	0	0	-
Grade, %	0	-	-	0	0	-
Peak Hour Factor	86	86	86	86	86	86
Heavy Vehicles, %	0	0	0	0	0	0
Mvmt Flow	2273	36	0	1415	0	6

Major/Minor	Major1		Major2		Minor1	
Conflicting Flow All	0	0	2309	0	2857	1155
Stage 1	-	-	-	-	2291	-
Stage 2	-	-	-	-	566	-
Critical Hdwy	-	-	5.3	-	5.7	7.1
Critical Hdwy Stg 1	-	-	-	-	6.6	-
Critical Hdwy Stg 2	-	-	-	-	6	-
Follow-up Hdwy	-	-	3.1	-	3.8	3.9
Pot Cap-1 Maneuver	-	-	512	-	*331	*461
Stage 1	-	-	-	-	*424	-
Stage 2	-	-	-	-	*652	-
Platoon blocked, %	-	-	1	-	1	1
Mov Cap-1 Maneuver	-	-	512	-	*331	*461
Mov Cap-2 Maneuver	-	-	-	-	*331	-
Stage 1	-	-	-	-	*424	-
Stage 2	-	-	-	-	*652	-

Approach	EB	WB	NB
HCM Control Delay, s	0	0	12.9
HCM LOS			B

Minor Lane/Major Mvmt	NBLn1	EBT	EBR	WBL	WBT
Capacity (veh/h)	461	-	-	512	-
HCM Lane V/C Ratio	0.013	-	-	-	-
HCM Control Delay (s)	12.9	-	-	0	-
HCM Lane LOS	B	-	-	A	-
HCM 95th %tile Q(veh)	0	-	-	0	-

Notes

~: Volume exceeds capacity $: Delay exceeds 300s +: Computation Not Defined *: All major volume in platoon

Movement	EBL	EBT	EBR	WBL	WBT	WBR	NBL	NBT	NBR	SBL	SBT	SBR
Lane Configurations												
Traffic Volume (veh/h)	5	32	178	89	24	8	287	1462	119	11	455	24
Future Volume (veh/h)	5	32	178	89	24	8	287	1462	119	11	455	24
Number	7	4	14	3	8	18	5	2	12	1	6	16
Initial Q (Qb), veh	0	0	0	0	0	0	0	0	0	0	0	0
Ped-Bike Adj(A_pbT)	1.00		1.00	1.00		1.00	1.00		1.00	1.00		0.98
Parking Bus, Adj	1.00	1.00	1.00	1.00	1.00	1.00	1.00	1.00	1.00	1.00	1.00	1.00
Adj Sat Flow, veh/h/ln	1900	1900	1900	1900	1900	1900	1900	1900	1900	1900	1900	1900
Adj Flow Rate, veh/h	6	38	160	106	29	9	342	1740	135	13	542	28
Adj No. of Lanes	1	1	1	1	1	1	1	2	0	1	2	0
Peak Hour Factor	0.84	0.84	0.84	0.84	0.84	0.84	0.84	0.84	0.84	0.84	0.84	0.84
Percent Heavy Veh, %	0	0	0	0	0	0	0	0	0	0	0	0
Cap, veh/h	14	186	489	124	302	256	371	2205	169	27	1600	83
Arrive On Green	0.01	0.10	0.10	0.07	0.16	0.16	0.20	0.65	0.65	0.01	0.46	0.46
Sat Flow, veh/h	1810	1900	1615	1810	1900	1612	1810	3398	261	1810	3489	180
Grp Volume(v), veh/h	6	38	160	106	29	9	342	915	960	13	280	290
Grp Sat Flow(s),veh/h/ln	1810	1900	1615	1810	1900	1612	1810	1805	1854	1810	1805	1864
Q Serve(g_s), s	0.4	2.2	9.2	7.0	1.6	0.6	22.2	43.3	45.2	0.9	11.9	12.0
Cycle Q Clear(g_c), s	0.4	2.2	9.2	7.0	1.6	0.6	22.2	43.3	45.2	0.9	11.9	12.0
Prop In Lane	1.00		1.00	1.00		1.00	1.00		0.14	1.00		0.10
Lane Grp Cap(c), veh/h	14	186	489	124	302	256	371	1171	1203	27	828	855
V/C Ratio(X)	0.44	0.20	0.33	0.86	0.10	0.04	0.92	0.78	0.80	0.49	0.34	0.34
Avail Cap(c_a), veh/h	80	380	654	124	426	361	519	1171	1203	81	828	855
HCM Platoon Ratio	1.00	1.00	1.00	1.00	1.00	1.00	1.00	1.00	1.00	1.00	1.00	1.00
Upstream Filter(I)	1.00	1.00	1.00	1.00	1.00	1.00	1.00	1.00	1.00	1.00	1.00	1.00
Uniform Delay (d), s/veh	59.3	49.8	32.4	55.3	43.1	42.7	46.8	15.0	15.3	58.7	20.8	20.8
Incr Delay (d2), s/veh	8.0	0.2	0.1	39.8	0.1	0.0	15.0	5.2	5.6	5.1	1.1	1.1
Initial Q Delay(d3),s/veh	0.0	0.0	0.0	0.0	0.0	0.0	0.0	0.0	0.0	0.0	0.0	0.0
%ile BackOfQ(50%),veh/ln	0.2	1.2	4.1	4.8	0.8	0.3	12.7	23.0	24.8	0.5	6.2	6.4
LnGrp Delay(d),s/veh	67.3	50.0	32.5	95.1	43.2	42.7	61.8	20.2	20.9	63.8	21.9	21.9
LnGrp LOS	E	D	C	F	D	D	E	C	C	E	C	C
Approach Vol, veh/h		204			144			2217			583	
Approach Delay, s/veh		36.8			81.4			26.9			22.8	
Approach LOS		D			F			C			C	

Timer	1	2	3	4	5	6	7	8
Assigned Phs	1	2	3	4	5	6	7	8
Phs Duration (G+Y+Rc), s	6.0	84.1	12.4	17.6	28.8	61.2	5.1	24.9
Change Period (Y+Rc), s	* 4.2	6.2	* 4.2	5.8	* 4.2	6.2	* 4.2	5.8
Max Green Setting (Gmax), s	* 5.4	62.0	* 8.2	24.0	* 34	33.0	* 5.3	26.9
Max Q Clear Time (g_c+I1), s	2.9	47.2	9.0	11.2	24.2	14.0	2.4	3.6
Green Ext Time (p_c), s	0.0	9.0	0.0	0.4	0.4	10.6	0.0	0.4

Intersection Summary	
HCM 2010 Ctrl Delay	29.3
HCM 2010 LOS	C

Notes

Intersection	
Int Delay, s/veh	0.7

Movement	WBL	WBR	NBT	NBR	SBL	SBT
Traffic Vol, veh/h	16	6	1846	33	1	722
Future Vol, veh/h	16	6	1846	33	1	722
Conflicting Peds, #/hr	0	0	0	0	0	0
Sign Control	Stop	Stop	Free	Free	Free	Free
RT Channelized	-	None	-	None	-	None
Storage Length	210	0	-	-	120	-
Veh in Median Storage, #	2	-	0	-	-	0
Grade, %	0	-	0	-	-	0
Peak Hour Factor	84	84	84	84	84	84
Heavy Vehicles, %	0	0	0	0	0	0
Mvmt Flow	19	7	2198	39	1	860

Major/Minor	Minor1		Major1		Major2	
Conflicting Flow All	3079	2217	0	0	2237	0
Stage 1	2217	-	-	-	-	-
Stage 2	862	-	-	-	-	-
Critical Hdwy	6.4	6.2	-	-	4.1	-
Critical Hdwy Stg 1	5.4	-	-	-	-	-
Critical Hdwy Stg 2	5.4	-	-	-	-	-
Follow-up Hdwy	3.5	3.3	-	-	2.2	-
Pot Cap-1 Maneuver	~ 0	56	-	-	235	-
Stage 1	90	-	-	-	-	-
Stage 2	425	-	-	-	-	-
Platoon blocked, %	1		-	-		-
Mov Cap-1 Maneuver	0	56	-	-	235	-
Mov Cap-2 Maneuver	68	-	-	-	-	-
Stage 1	90	-	-	-	-	-
Stage 2	424	-	-	-	-	-

Approach	WB	NB	SB
HCM Control Delay, s	77.7	0	0
HCM LOS	F		

Minor Lane/Major Mvmt	NBT	NBR	WBLn1	WBLn2	SBL	SBT
Capacity (veh/h)	-	-	68	56	235	-
HCM Lane V/C Ratio	-	-	0.28	0.128	0.005	-
HCM Control Delay (s)	-	-	77.4	78.5	20.4	-
HCM Lane LOS	-	-	F	F	C	-
HCM 95th %tile Q(veh)	-	-	1	0.4	0	-

Notes

~: Volume exceeds capacity $: Delay exceeds 300s +: Computation Not Defined *: All major volume in platoon

Intersection	
Int Delay, s/veh	0.1

Movement	WBL	WBR	NBT	NBR	SBL	SBT
Traffic Vol, veh/h	4	2	1877	5	2	736
Future Vol, veh/h	4	2	1877	5	2	736
Conflicting Peds, #/hr	0	0	0	0	0	0
Sign Control	Stop	Stop	Free	Free	Free	Free
RT Channelized	-	None	-	None	-	None
Storage Length	0	-	-	-	50	-
Veh in Median Storage, #	2	-	0	-	-	0
Grade, %	0	-	0	-	-	0
Peak Hour Factor	92	92	92	92	92	92
Heavy Vehicles, %	0	0	0	0	0	0
Mvmt Flow	4	2	2040	5	2	800

Major/Minor	Minor1		Major1		Major2	
Conflicting Flow All	2847	1023	0	0	2046	0
Stage 1	2043	-	-	-	-	-
Stage 2	804	-	-	-	-	-
Critical Hdwy	5	6.9	-	-	4.1	-
Critical Hdwy Stg 1	5	-	-	-	-	-
Critical Hdwy Stg 2	5	-	-	-	-	-
Follow-up Hdwy	3.5	3.3	-	-	2.2	-
Pot Cap-1 Maneuver	*31	237	-	-	279	-
Stage 1	*139	-	-	-	-	-
Stage 2	*438	-	-	-	-	-
Platoon blocked, %	1		-	-		-
Mov Cap-1 Maneuver	*31	237	-	-	279	-
Mov Cap-2 Maneuver	*106	-	-	-	-	-
Stage 1	*139	-	-	-	-	-
Stage 2	*435	-	-	-	-	-

Approach	WB	NB	SB
HCM Control Delay, s	34.2	0	0
HCM LOS	D		

Minor Lane/Major Mvmt	NBT	NBR	WBLn1	SBL	SBT
Capacity (veh/h)	-	-	130	279	-
HCM Lane V/C Ratio	-	-	0.05	0.008	-
HCM Control Delay (s)	-	-	34.2	18	-
HCM Lane LOS	-	-	D	C	-
HCM 95th %tile Q(veh)	-	-	0.2	0	-

Notes

~: Volume exceeds capacity $: Delay exceeds 300s +: Computation Not Defined *: All major volume in platoon

Movement	EBL	EBT	EBR	WBL	WBT	WBR	NBL	NBT	NBR	SBL	SBT	SBR
Lane Configurations												
Traffic Volume (veh/h)	942	877	148	22	609	47	114	222	21	11	80	451
Future Volume (veh/h)	942	877	148	22	609	47	114	222	21	11	80	451
Number	5	2	12	1	6	16	3	8	18	7	4	14
Initial Q (Qb), veh	0	0	0	0	0	0	0	0	0	0	0	0
Ped-Bike Adj(A_pbT)	1.00		1.00	1.00		0.98	1.00		1.00	1.00		1.00
Parking Bus, Adj	1.00	1.00	1.00	1.00	1.00	1.00	1.00	1.00	1.00	1.00	1.00	1.00
Adj Sat Flow, veh/h/ln	1900	1900	1900	1900	1900	1900	1900	1900	1900	1900	1900	1900
Adj Flow Rate, veh/h	1024	953	153	24	662	44	124	241	9	12	87	458
Adj No. of Lanes	1	3	1	1	3	0	2	2	1	1	2	0
Peak Hour Factor	0.92	0.92	0.92	0.92	0.92	0.92	0.92	0.92	0.92	0.92	0.92	0.92
Percent Heavy Veh, %	0	0	0	0	0	0	0	0	0	0	0	0
Cap, veh/h	1200	4852	1511	42	1398	92	146	1124	503	25	511	458
Arrive On Green	0.66	0.94	0.94	0.02	0.28	0.28	0.04	0.31	0.31	0.01	0.28	0.28
Sat Flow, veh/h	1810	5187	1615	1810	4964	328	3510	3610	1615	1810	1805	1615
Grp Volume(v), veh/h	1024	953	153	24	460	246	124	241	9	12	87	458
Grp Sat Flow(s),veh/h/ln	1810	1729	1615	1810	1729	1834	1755	1805	1615	1810	1805	1615
Q Serve(g_s), s	52.7	1.7	0.8	1.6	13.2	13.4	4.2	5.9	0.5	0.8	4.4	34.0
Cycle Q Clear(g_c), s	52.7	1.7	0.8	1.6	13.2	13.4	4.2	5.9	0.5	0.8	4.4	34.0
Prop In Lane	1.00		1.00	1.00		0.18	1.00		1.00	1.00		1.00
Lane Grp Cap(c), veh/h	1200	4852	1511	42	974	517	146	1124	503	25	511	458
V/C Ratio(X)	0.85	0.20	0.10	0.58	0.47	0.48	0.85	0.21	0.02	0.48	0.17	1.00
Avail Cap(c_a), veh/h	1200	4852	1511	87	974	517	146	1124	503	75	511	458
HCM Platoon Ratio	1.00	1.00	1.00	1.00	1.00	1.00	1.00	1.00	1.00	1.00	1.00	1.00
Upstream Filter(I)	1.00	1.00	1.00	1.00	1.00	1.00	1.00	1.00	1.00	1.00	1.00	1.00
Uniform Delay (d), s/veh	15.7	0.3	0.3	58.0	35.7	35.8	57.1	30.5	28.6	58.8	32.4	43.0
Incr Delay (d2), s/veh	5.8	0.1	0.1	4.7	1.6	3.1	33.2	0.4	0.1	5.3	0.7	42.3
Initial Q Delay(d3),s/veh	0.0	0.0	0.0	0.0	0.0	0.0	0.0	0.0	0.0	0.0	0.0	0.0
%ile BackOfQ(50%),veh/ln	27.8	0.8	0.4	0.8	6.5	7.2	2.7	3.0	0.2	0.4	2.3	20.5
LnGrp Delay(d),s/veh	21.5	0.4	0.4	62.7	37.4	38.9	90.3	30.9	28.7	64.1	33.1	85.3
LnGrp LOS	C	A	A	E	D	D	F	C	C	E	C	F
Approach Vol, veh/h		2130			730			374			557	
Approach Delay, s/veh		10.5			38.7			50.6			76.7	
Approach LOS		B			D			D			E	

Timer	1	2	3	4	5	6	7	8
Assigned Phs	1	2	3	4	5	6	7	8
Phs Duration (G+Y+Rc), s	7.0	119.6	9.2	40.2	87.0	39.6	5.8	43.6
Change Period (Y+Rc), s	* 4.2	5.8	* 4.2	6.2	5.8	* 5.8	* 4.2	* 6.2
Max Green Setting (Gmax), s	* 5.8	54.8	* 5	34.0	26.8	* 34	* 5	* 35
Max Q Clear Time (g_c+I1), s	3.6	3.7	6.2	36.0	54.7	15.4	2.8	7.9
Green Ext Time (p_c), s	0.0	7.6	0.0	0.0	0.0	2.5	0.0	3.1

Intersection Summary	
HCM 2010 Ctrl Delay	29.6
HCM 2010 LOS	C

Notes

Movement	EBL	EBT	EBR	WBL	WBT	WBR	NBL	NBT	NBR	SBL	SBT	SBR
Lane Configurations												
Traffic Volume (veh/h)	0	713	132	684	203	0	0	0	0	839	3	313
Future Volume (veh/h)	0	713	132	684	203	0	0	0	0	839	3	313
Number	5	2	12	1	6	16				7	4	14
Initial Q (Qb), veh	0	0	0	0	0	0				0	0	0
Ped-Bike Adj(A_pbT)	1.00		1.00	1.00		1.00				1.00		1.00
Parking Bus, Adj	1.00	1.00	1.00	1.00	1.00	1.00				1.00	1.00	1.00
Adj Sat Flow, veh/h/ln	0	1900	1900	1900	1900	0				1900	1900	1900
Adj Flow Rate, veh/h	0	810	140	777	231	0				953	3	283
Adj No. of Lanes	0	2	1	1	2	0				0	1	1
Peak Hour Factor	0.88	0.88	0.88	0.88	0.88	0.88				0.88	0.88	0.88
Percent Heavy Veh, %	0	0	0	0	0	0				0	0	0
Cap, veh/h	0	752	336	784	2467	0				677	2	606
Arrive On Green	0.00	0.21	0.21	0.14	0.23	0.00				0.38	0.38	0.38
Sat Flow, veh/h	0	3705	1615	1810	3705	0				1804	6	1615
Grp Volume(v), veh/h	0	810	140	777	231	0				956	0	283
Grp Sat Flow(s),veh/h/ln	0	1805	1615	1810	1805	0				1810	0	1615
Q Serve(g_s), s	0.0	25.0	9.0	51.4	6.1	0.0				45.0	0.0	15.9
Cycle Q Clear(g_c), s	0.0	25.0	9.0	51.4	6.1	0.0				45.0	0.0	15.9
Prop In Lane	0.00		1.00	1.00		0.00				1.00		1.00
Lane Grp Cap(c), veh/h	0	752	336	784	2467	0				679	0	606
V/C Ratio(X)	0.00	1.08	0.42	0.99	0.09	0.00				1.41	0.00	0.47
Avail Cap(c_a), veh/h	0	752	336	784	2467	0				679	0	606
HCM Platoon Ratio	1.00	1.00	1.00	0.33	0.33	1.00				1.00	1.00	1.00
Upstream Filter(I)	0.00	1.00	1.00	0.87	0.87	0.00				1.00	0.00	1.00
Uniform Delay (d), s/veh	0.0	47.5	41.2	51.2	17.1	0.0				37.5	0.0	28.4
Incr Delay (d2), s/veh	0.0	55.5	3.8	27.7	0.1	0.0				192.6	0.0	0.6
Initial Q Delay(d3),s/veh	0.0	0.0	0.0	0.0	0.0	0.0				0.0	0.0	0.0
%ile BackOfQ(50%),veh/ln	0.0	18.2	4.4	31.9	3.1	0.0				58.7	0.0	7.2
LnGrp Delay(d),s/veh	0.0	103.0	44.9	78.8	17.1	0.0				230.1	0.0	29.0
LnGrp LOS		F	D	E	B					F		C
Approach Vol, veh/h		950			1008						1239	
Approach Delay, s/veh		94.5			64.7						184.2	
Approach LOS		F			E						F	

Timer	1	2	3	4	5	6	7	8
Assigned Phs	1	2		4		6		
Phs Duration (G+Y+Rc), s	57.5	30.0		50.0		87.5		
Change Period (Y+Rc), s	5.0	* 5		5.0		5.0		
Max Green Setting (Gmax), s	35.5	* 25		45.0		65.0		
Max Q Clear Time (g_c+I1), s	53.4	27.0		47.0		8.1		
Green Ext Time (p_c), s	0.0	0.0		0.0		2.1		

Intersection Summary	
HCM 2010 Ctrl Delay	119.9
HCM 2010 LOS	F

Notes

Movement	EBL	EBT	EBR	WBL	WBT	WBR	NBL	NBT	NBR	SBL	SBT	SBR
Lane Configurations												
Traffic Volume (veh/h)	509	1042	0	0	837	1643	51	0	294	0	0	0
Future Volume (veh/h)	509	1042	0	0	837	1643	51	0	294	0	0	0
Number	5	2	12	1	6	16	3	8	18			
Initial Q (Qb), veh	0	0	0	0	0	0	0	0	0			
Ped-Bike Adj(A_pbT)	1.00		1.00	1.00		0.99	1.00		1.00			
Parking Bus, Adj	1.00	1.00	1.00	1.00	1.00	1.00	1.00	1.00	1.00			
Adj Sat Flow, veh/h/ln	1900	1900	0	0	1900	1900	1900	1900	1900			
Adj Flow Rate, veh/h	606	1240	0	0	996	1945	61	0	182			
Adj No. of Lanes	1	2	0	0	2	1	0	1	1			
Peak Hour Factor	0.84	0.84	0.84	0.84	0.84	0.84	0.84	0.84	0.84			
Percent Heavy Veh, %	0	0	0	0	0	0	0	0	0			
Cap, veh/h	782	3786	0	0	2076	917	226	0	202			
Arrive On Green	0.86	1.00	0.00	0.00	0.57	0.57	0.13	0.00	0.13			
Sat Flow, veh/h	1810	3705	0	0	3705	1595	1810	0	1615			
Grp Volume(v), veh/h	606	1240	0	0	996	1945	61	0	182			
Grp Sat Flow(s),veh/h/ln	1810	1805	0	0	1805	1595	1810	0	1615			
Q Serve(g_s), s	16.5	0.0	0.0	0.0	19.4	69.0	3.7	0.0	13.3			
Cycle Q Clear(g_c), s	16.5	0.0	0.0	0.0	19.4	69.0	3.7	0.0	13.3			
Prop In Lane	1.00		0.00	0.00		1.00	1.00		1.00			
Lane Grp Cap(c), veh/h	782	3786	0	0	2076	917	226	0	202			
V/C Ratio(X)	0.77	0.33	0.00	0.00	0.48	2.12	0.27	0.00	0.90			
Avail Cap(c_a), veh/h	782	3786	0	0	2076	917	226	0	202			
HCM Platoon Ratio	2.00	2.00	1.00	1.00	1.00	1.00	1.00	1.00	1.00			
Upstream Filter(I)	0.09	0.09	0.00	0.00	1.00	1.00	1.00	0.00	1.00			
Uniform Delay (d), s/veh	5.7	0.0	0.0	0.0	15.0	25.5	47.5	0.0	51.8			
Incr Delay (d2), s/veh	0.4	0.0	0.0	0.0	0.8	508.0	2.9	0.0	41.9			
Initial Q Delay(d3),s/veh	0.0	0.0	0.0	0.0	0.0	0.0	0.0	0.0	0.0			
%ile BackOfQ(50%),veh/ln	7.5	0.0	0.0	0.0	9.9	159.5	2.0	0.0	8.3			
LnGrp Delay(d),s/veh	6.2	0.0	0.0	0.0	15.8	533.5	50.5	0.0	93.7			
LnGrp LOS	A	A			B	F	D		F			
Approach Vol, veh/h		1846			2941			243				
Approach Delay, s/veh		2.0			358.2			82.9				
Approach LOS		A			F			F				

Timer	1	2	3	4	5	6	7	8
Assigned Phs		2			5	6		8
Phs Duration (G+Y+Rc), s		130.9			56.9	74.0		20.0
Change Period (Y+Rc), s		5.0			5.0	* 5		5.0
Max Green Setting (Gmax), s		95.0			22.5	* 69		15.0
Max Q Clear Time (g_c+I1), s		2.0			18.5	71.0		15.3
Green Ext Time (p_c), s		7.8			2.5	0.0		0.0

Intersection Summary	
HCM 2010 Ctrl Delay	214.2
HCM 2010 LOS	F

Notes

Intersection	
Int Delay, s/veh	8.4

Movement	EBL	EBT	WBT	WBR	SBL	SBR
Traffic Vol, veh/h	22	1314	2386	7	15	93
Future Vol, veh/h	22	1314	2386	7	15	93
Conflicting Peds, #/hr	0	0	0	0	0	0
Sign Control	Free	Free	Free	Free	Stop	Stop
RT Channelized	-	None	-	None	-	None
Storage Length	-	-	-	0	0	-
Veh in Median Storage, #	-	0	0	-	0	-
Grade, %	-	0	0	-	0	-
Peak Hour Factor	88	88	88	88	88	88
Heavy Vehicles, %	0	0	0	0	0	0
Mvmt Flow	25	1493	2711	8	17	106

Major/Minor	Major1		Major2		Minor2	
Conflicting Flow All	2711	0	-	0	3508	1356
Stage 1	-	-	-	-	2711	-
Stage 2	-	-	-	-	797	-
Critical Hdwy	4.1	-	-	-	6.8	6.9
Critical Hdwy Stg 1	-	-	-	-	5.8	-
Critical Hdwy Stg 2	-	-	-	-	5.8	-
Follow-up Hdwy	2.2	-	-	-	3.5	3.3
Pot Cap-1 Maneuver	153	-	-	-	*~ 1	142
Stage 1	-	-	-	-	*37	-
Stage 2	-	-	-	-	*514	-
Platoon blocked, %		-	-	-	1	
Mov Cap-1 Maneuver	153	-	-	-	*0	142
Mov Cap-2 Maneuver	-	-	-	-	*0	-
Stage 1	-	-	-	-	*37	-
Stage 2	-	-	-	-	*21	-

Approach	EB	WB	SB
HCM Control Delay, s	15.6	0	103.7
HCM LOS			F

Minor Lane/Major Mvmt	EBL	EBT	WBT	WBR	SBLn1
Capacity (veh/h)	153	-	-	-	142
HCM Lane V/C Ratio	0.163	-	-	-	0.864
HCM Control Delay (s)	33.1	15.3	-	-	103.7
HCM Lane LOS	D	C	-	-	F
HCM 95th %tile Q(veh)	0.6	-	-	-	5.7

Notes			
~: Volume exceeds capacity	$: Delay exceeds 300s	+: Computation Not Defined	*: All major volume in platoon

Movement	EBL	EBT	EBR	WBL	WBT	WBR	NBL	NBT	NBR	SBL	SBT	SBR
Lane Configurations												
Traffic Volume (veh/h)	20	1249	26	39	2198	3	71	4	20	7	2	94
Future Volume (veh/h)	20	1249	26	39	2198	3	71	4	20	7	2	94
Number	5	2	12	1	6	16	3	8	18	7	4	14
Initial Q (Qb), veh	0	0	0	0	0	0	0	0	0	0	0	0
Ped-Bike Adj(A_pbT)	1.00		1.00	1.00		1.00	1.00		1.00	1.00		1.00
Parking Bus, Adj	1.00	1.00	1.00	1.00	1.00	1.00	1.00	1.00	1.00	1.00	1.00	1.00
Adj Sat Flow, veh/h/ln	1900	1900	1900	1900	1900	1900	1900	1900	1900	1900	1900	1900
Adj Flow Rate, veh/h	24	1469	31	46	2586	3	84	5	19	8	2	104
Adj No. of Lanes	1	2	1	1	2	1	0	1	0	0	1	1
Peak Hour Factor	0.85	0.85	0.85	0.85	0.85	0.85	0.85	0.85	0.85	0.85	0.85	0.85
Percent Heavy Veh, %	0	0	0	0	0	0	0	0	0	0	0	0
Cap, veh/h	42	1877	840	142	2126	951	376	27	74	420	99	492
Arrive On Green	0.02	0.52	0.52	0.08	0.59	0.59	0.30	0.30	0.30	0.30	0.30	0.30
Sat Flow, veh/h	1810	3610	1615	1810	3610	1615	1051	87	243	1195	326	1615
Grp Volume(v), veh/h	24	1469	31	46	2586	3	108	0	0	10	0	104
Grp Sat Flow(s),veh/h/ln	1810	1805	1615	1810	1805	1615	1382	0	0	1521	0	1615
Q Serve(g_s), s	1.5	37.9	1.1	2.8	67.7	0.1	6.0	0.0	0.0	0.0	0.0	5.5
Cycle Q Clear(g_c), s	1.5	37.9	1.1	2.8	67.7	0.1	6.6	0.0	0.0	0.4	0.0	5.5
Prop In Lane	1.00		1.00	1.00		1.00	0.78		0.18	0.80		1.00
Lane Grp Cap(c), veh/h	42	1877	840	142	2126	951	476	0	0	519	0	492
V/C Ratio(X)	0.57	0.78	0.04	0.32	1.22	0.00	0.23	0.00	0.00	0.02	0.00	0.21
Avail Cap(c_a), veh/h	79	1877	840	142	2126	951	476	0	0	519	0	492
HCM Platoon Ratio	1.00	1.00	1.00	1.00	1.00	1.00	1.00	1.00	1.00	1.00	1.00	1.00
Upstream Filter(I)	1.00	1.00	1.00	1.00	1.00	1.00	1.00	0.00	0.00	1.00	0.00	1.00
Uniform Delay (d), s/veh	55.6	22.3	13.5	50.1	23.6	9.7	30.1	0.0	0.0	28.0	0.0	29.7
Incr Delay (d2), s/veh	4.4	3.3	0.1	0.5	101.9	0.0	1.1	0.0	0.0	0.1	0.0	1.0
Initial Q Delay(d3),s/veh	0.0	0.0	0.0	0.0	0.0	0.0	0.0	0.0	0.0	0.0	0.0	0.0
%ile BackOfQ(50%),veh/ln	0.8	19.6	0.5	1.4	63.5	0.0	2.7	0.0	0.0	0.2	0.0	2.6
LnGrp Delay(d),s/veh	60.0	25.7	13.6	50.6	125.5	9.7	31.2	0.0	0.0	28.0	0.0	30.7
LnGrp LOS	E	C	B	D	F	A	C			C		C
Approach Vol, veh/h		1524			2635			108			114	
Approach Delay, s/veh		26.0			124.1			31.2			30.5	
Approach LOS		C			F			C			C	

Timer	1	2	3	4	5	6	7	8
Assigned Phs	1	2		4	5	6		8
Phs Duration (G+Y+Rc), s	14.9	65.6		40.1	6.9	73.6		40.1
Change Period (Y+Rc), s	5.8	* 5.8		5.1	* 4.2	5.8		5.1
Max Green Setting (Gmax), s	5.1	* 60		35.0	* 5	59.9		35.0
Max Q Clear Time (g_c+I1), s	4.8	39.9		7.5	3.5	69.7		8.6
Green Ext Time (p_c), s	0.0	7.4		0.6	0.0	0.0		0.6

Intersection Summary	
HCM 2010 Ctrl Delay	85.2
HCM 2010 LOS	F

Notes

Intersection	
Int Delay, s/veh	0

Movement	EBT	EBR	WBL	WBT	NBL	NBR
Traffic Vol, veh/h	1237	20	0	2224	0	7
Future Vol, veh/h	1237	20	0	2224	0	7
Conflicting Peds, #/hr	0	0	0	0	0	0
Sign Control	Free	Free	Free	Free	Stop	Stop
RT Channelized	-	None	-	None	-	None
Storage Length	-	-	-	-	-	0
Veh in Median Storage, #	0	-	-	0	0	-
Grade, %	0	-	-	0	0	-
Peak Hour Factor	87	87	87	87	87	87
Heavy Vehicles, %	0	0	0	0	0	0
Mvmt Flow	1422	23	0	2556	0	8

Major/Minor	Major1		Major2		Minor1	
Conflicting Flow All	0	0	1445	0	2456	722
Stage 1	-	-	-	-	1433	-
Stage 2	-	-	-	-	1023	-
Critical Hdwy	-	-	5.3	-	5.7	7.1
Critical Hdwy Stg 1	-	-	-	-	6.6	-
Critical Hdwy Stg 2	-	-	-	-	6	-
Follow-up Hdwy	-	-	3.1	-	3.8	3.9
Pot Cap-1 Maneuver	-	-	706	-	*54	*645
Stage 1	-	-	-	-	*568	-
Stage 2	-	-	-	-	*406	-
Platoon blocked, %	-	-	1	-		1
Mov Cap-1 Maneuver	-	-	706	-	*54	*645
Mov Cap-2 Maneuver	-	-	-	-	*54	-
Stage 1	-	-	-	-	*568	-
Stage 2	-	-	-	-	*406	-

Approach	EB	WB	NB
HCM Control Delay, s	0	0	10.7
HCM LOS			B

Minor Lane/Major Mvmt	NBLn1	EBT	EBR	WBL	WBT
Capacity (veh/h)	645	-	-	706	-
HCM Lane V/C Ratio	0.012	-	-	-	-
HCM Control Delay (s)	10.7	-	-	0	-
HCM Lane LOS	B	-	-	A	-
HCM 95th %tile Q(veh)	0	-	-	0	-

Notes

~: Volume exceeds capacity $: Delay exceeds 300s +: Computation Not Defined *: All major volume in platoon

Movement	EBL	EBT	EBR	WBL	WBT	WBR	NBL	NBT	NBR	SBL	SBT	SBR
Lane Configurations												
Traffic Volume (veh/h)	39	102	456	217	71	37	143	754	109	71	1461	68
Future Volume (veh/h)	39	102	456	217	71	37	143	754	109	71	1461	68
Number	7	4	14	3	8	18	5	2	12	1	6	16
Initial Q (Qb), veh	0	0	0	0	0	0	0	0	0	0	0	0
Ped-Bike Adj(A_pbT)	1.00		1.00	1.00		0.96	1.00		0.99	1.00		1.00
Parking Bus, Adj	1.00	1.00	1.00	1.00	1.00	1.00	1.00	1.00	1.00	1.00	1.00	1.00
Adj Sat Flow, veh/h/ln	1900	1900	1900	1900	1900	1900	1900	1900	1900	1900	1900	1900
Adj Flow Rate, veh/h	51	134	430	286	93	16	188	992	109	93	1922	57
Adj No. of Lanes	1	1	1	1	1	1	1	2	0	1	2	0
Peak Hour Factor	0.76	0.76	0.76	0.76	0.76	0.76	0.76	0.76	0.76	0.76	0.76	0.76
Percent Heavy Veh, %	0	0	0	0	0	0	0	0	0	0	0	0
Cap, veh/h	66	380	468	208	554	454	163	2882	317	117	3056	90
Arrive On Green	0.04	0.20	0.20	0.12	0.29	0.29	0.09	0.88	0.88	0.06	0.85	0.85
Sat Flow, veh/h	1810	1900	1611	1810	1900	1557	1810	3279	360	1810	3581	106
Grp Volume(v), veh/h	51	134	430	286	93	16	188	546	555	93	964	1015
Grp Sat Flow(s),veh/h/ln	1810	1900	1611	1810	1900	1557	1810	1805	1834	1810	1805	1881
Q Serve(g_s), s	3.4	7.3	24.0	13.8	4.4	0.9	10.8	6.3	6.3	6.1	20.2	20.6
Cycle Q Clear(g_c), s	3.4	7.3	24.0	13.8	4.4	0.9	10.8	6.3	6.3	6.1	20.2	20.6
Prop In Lane	1.00		1.00	1.00		1.00	1.00		0.20	1.00		0.06
Lane Grp Cap(c), veh/h	66	380	468	208	554	454	163	1587	1612	117	1541	1606
V/C Ratio(X)	0.77	0.35	0.92	1.37	0.17	0.04	1.15	0.34	0.34	0.80	0.63	0.63
Avail Cap(c_a), veh/h	133	380	468	208	554	454	163	1587	1612	142	1541	1606
HCM Platoon Ratio	1.00	1.00	1.00	1.00	1.00	1.00	1.00	1.00	1.00	1.00	1.00	1.00
Upstream Filter(I)	1.00	1.00	1.00	1.00	1.00	1.00	1.00	1.00	1.00	1.00	1.00	1.00
Uniform Delay (d), s/veh	57.3	41.3	115.8	53.1	31.6	30.4	54.6	1.3	1.3	55.4	2.8	2.8
Incr Delay (d2), s/veh	6.9	0.2	23.0	195.8	0.1	0.0	118.1	0.6	0.6	18.6	1.9	1.9
Initial Q Delay(d3),s/veh	0.0	0.0	0.0	0.0	0.0	0.0	0.0	0.0	0.0	0.0	0.0	0.0
%ile BackOfQ(50%),veh/ln	1.8	3.9	3.0	18.2	2.3	0.4	10.7	3.3	3.3	3.7	10.5	11.3
LnGrp Delay(d),s/veh	64.2	41.5	138.7	248.9	31.7	30.4	172.7	1.9	1.8	74.0	4.7	4.7
LnGrp LOS	E	D	F	F	C	C	F	A	A	E	A	A
Approach Vol, veh/h		615			395			1289			2072	
Approach Delay, s/veh		111.4			188.9			26.8			7.8	
Approach LOS		F			F			C			A	

Timer	1	2	3	4	5	6	7	8
Assigned Phs	1	2	3	4	5	6	7	8
Phs Duration (G+Y+Rc), s	11.9	113.3	19.6	29.8	15.0	110.2	8.6	40.8
Change Period (Y+Rc), s	* 4.2	6.2	5.8	* 5.8	* 4.2	6.2	* 4.2	5.8
Max Green Setting (Gmax), s	* 9.4	52.4	13.8	* 24	* 11	51.0	* 8.8	29.0
Max Q Clear Time (g_c+I1), s	8.1	8.3	15.8	26.0	12.8	22.6	5.4	6.4
Green Ext Time (p_c), s	0.0	21.9	0.0	0.0	0.0	17.4	0.0	0.6

Intersection Summary	
HCM 2010 Ctrl Delay	44.3
HCM 2010 LOS	D

Notes

Intersection	
Int Delay, s/veh	0.1

Movement	WBL	WBR	NBT	NBR	SBL	SBT
Traffic Vol, veh/h	36	14	999	39	16	2039
Future Vol, veh/h	36	14	999	39	16	2039
Conflicting Peds, #/hr	0	0	0	1	0	0
Sign Control	Stop	Stop	Free	Free	Free	Free
RT Channelized	-	None	-	None	-	None
Storage Length	210	0	-	-	120	-
Veh in Median Storage, #	2	-	0	-	-	0
Grade, %	0	-	0	-	-	0
Peak Hour Factor	77	77	77	77	77	77
Heavy Vehicles, %	0	0	0	0	0	0
Mvmt Flow	47	18	1297	51	21	2648

Major/Minor	Minor1		Major1		Major2	
Conflicting Flow All	4013	1323	0	0	1348	0
Stage 1	1323	-	-	-	-	-
Stage 2	2690	-	-	-	-	-
Critical Hdwy	6.4	6.2	-	-	4.1	-
Critical Hdwy Stg 1	5.4	-	-	-	-	-
Critical Hdwy Stg 2	5.4	-	-	-	-	-
Follow-up Hdwy	3.5	3.3	-	-	2.2	-
Pot Cap-1 Maneuver	-	193	-	-	517	-
Stage 1	251	-	-	-	-	-
Stage 2	-	-	-	-	-	-
Platoon blocked, %	2		-	-		-
Mov Cap-1 Maneuver	-	193	-	-	517	-
Mov Cap-2 Maneuver	-	-	-	-	-	-
Stage 1	251	-	-	-	-	-
Stage 2	-	-	-	-	-	-

Approach	WB	NB	SB
HCM Control Delay, s		0	0.1
HCM LOS	-		

Minor Lane/Major Mvmt	NBT	NBR	WBLn1	WBLn2	SBL	SBT
Capacity (veh/h)	-	-	-	193	517	-
HCM Lane V/C Ratio	-	-	-	0.094	0.04	-
HCM Control Delay (s)	-	-	-	25.6	12.3	-
HCM Lane LOS	-	-	-	D	B	-
HCM 95th %tile Q(veh)	-	-	-	0.3	0.1	-

Intersection	
Int Delay, s/veh	0

Movement	WBL	WBR	NBT	NBR	SBL	SBT
Traffic Vol, veh/h	7	4	1034	2	1	2074
Future Vol, veh/h	7	4	1034	2	1	2074
Conflicting Peds, #/hr	0	0	0	0	0	0
Sign Control	Stop	Stop	Free	Free	Free	Free
RT Channelized	-	None	-	None	-	None
Storage Length	0	-	-	-	50	-
Veh in Median Storage, #	2	-	0	-	-	0
Grade, %	0	-	0	-	-	0
Peak Hour Factor	92	92	92	92	92	92
Heavy Vehicles, %	0	0	0	0	0	0
Mvmt Flow	8	4	1124	2	1	2254

Major/Minor	Minor1		Major1		Major2	
Conflicting Flow All	3382	563	0	0	1126	0
Stage 1	1125	-	-	-	-	-
Stage 2	2257	-	-	-	-	-
Critical Hdwy	5	6.9	-	-	4.1	-
Critical Hdwy Stg 1	5	-	-	-	-	-
Critical Hdwy Stg 2	5	-	-	-	-	-
Follow-up Hdwy	3.5	3.3	-	-	2.2	-
Pot Cap-1 Maneuver	-	475	-	-	628	-
Stage 1	355	-	-	-	-	-
Stage 2	-	-	-	-	-	-
Platoon blocked, %	2		-	-		-
Mov Cap-1 Maneuver	-	475	-	-	628	-
Mov Cap-2 Maneuver	-	-	-	-	-	-
Stage 1	355	-	-	-	-	-
Stage 2	-	-	-	-	-	-

Approach	WB	NB	SB
HCM Control Delay, s		0	0
HCM LOS	-		

Minor Lane/Major Mvmt	NBT	NBR	WBLn1	SBL	SBT
Capacity (veh/h)	-	-	-	628	-
HCM Lane V/C Ratio	-	-	-	0.002	-
HCM Control Delay (s)	-	-	-	10.7	-
HCM Lane LOS	-	-	-	B	-
HCM 95th %tile Q(veh)	-	-	-	0	-

Movement	EBL	EBT	EBR	WBL	WBT	WBR	NBL	NBT	NBR	SBL	SBT	SBR
Lane Configurations												
Traffic Volume (veh/h)	678	488	112	19	863	31	168	205	27	51	238	1194
Future Volume (veh/h)	678	488	112	19	863	31	168	205	27	51	238	1194
Number	5	2	12	1	6	16	3	8	18	7	4	14
Initial Q (Qb), veh	0	0	0	0	0	0	0	0	0	0	0	0
Ped-Bike Adj(A_pbT)	1.00		1.00	1.00		1.00	1.00		1.00	1.00		1.00
Parking Bus, Adj	1.00	1.00	1.00	1.00	1.00	1.00	1.00	1.00	1.00	1.00	1.00	1.00
Adj Sat Flow, veh/h/ln	1900	1900	1900	1900	1900	1900	1900	1900	1900	1900	1900	1900
Adj Flow Rate, veh/h	827	595	128	23	1052	27	205	250	23	62	290	1373
Adj No. of Lanes	1	3	1	1	3	0	2	2	1	1	2	0
Peak Hour Factor	0.82	0.82	0.82	0.82	0.82	0.82	0.82	0.82	0.82	0.82	0.82	0.82
Percent Heavy Veh, %	0	0	0	0	0	0	0	0	0	0	0	0
Cap, veh/h	1474	5656	1761	40	1482	38	170	1173	524	80	579	518
Arrive On Green	0.81	1.00	1.00	0.02	0.28	0.28	0.05	0.32	0.32	0.04	0.32	0.32
Sat Flow, veh/h	1810	5187	1615	1810	5201	133	3510	3610	1614	1810	1805	1615
Grp Volume(v), veh/h	827	595	128	23	699	380	205	250	23	62	290	1373
Grp Sat Flow(s),veh/h/ln	1810	1729	1615	1810	1729	1876	1755	1805	1614	1810	1805	1615
Q Serve(g_s), s	18.7	0.0	0.0	1.5	21.7	21.8	5.8	6.0	1.2	4.1	15.6	38.5
Cycle Q Clear(g_c), s	18.7	0.0	0.0	1.5	21.7	21.8	5.8	6.0	1.2	4.1	15.6	38.5
Prop In Lane	1.00		1.00	1.00		0.07	1.00		1.00	1.00		1.00
Lane Grp Cap(c), veh/h	1474	5656	1761	40	986	535	170	1173	524	80	579	518
V/C Ratio(X)	0.56	0.11	0.07	0.57	0.71	0.71	1.21	0.21	0.04	0.78	0.50	2.65
Avail Cap(c_a), veh/h	1474	5656	1761	86	986	535	170	1173	524	81	579	518
HCM Platoon Ratio	1.00	1.00	1.00	1.00	1.00	1.00	1.00	1.00	1.00	1.00	1.00	1.00
Upstream Filter(I)	1.00	1.00	1.00	1.00	1.00	1.00	1.00	1.00	1.00	1.00	1.00	1.00
Uniform Delay (d), s/veh	3.8	0.0	0.0	58.1	38.4	38.5	57.1	29.4	27.7	56.8	33.0	40.7
Incr Delay (d2), s/veh	0.3	0.0	0.1	4.6	4.3	7.8	136.1	0.4	0.2	32.9	3.1	747.9
Initial Q Delay(d3),s/veh	0.0	0.0	0.0	0.0	0.0	0.0	0.0	0.0	0.0	0.0	0.0	0.0
%ile BackOfQ(50%),veh/ln	9.3	0.0	0.0	0.8	11.0	12.4	6.0	3.1	0.5	2.8	8.2	124.8
LnGrp Delay(d),s/veh	4.1	0.0	0.1	62.7	42.8	46.2	193.2	29.8	27.9	89.7	36.0	788.7
LnGrp LOS	A	A	A	E	D	D	F	C	C	F	D	F
Approach Vol, veh/h		1550			1102			478			1725	
Approach Delay, s/veh		2.2			44.4			99.8			637.0	
Approach LOS		A			D			F			F	

Timer	1	2	3	4	5	6	7	8
Assigned Phs	1	2	3	4	5	6	7	8
Phs Duration (G+Y+Rc), s	6.9	138.2	10.0	44.7	105.1	40.0	9.5	45.2
Change Period (Y+Rc), s	* 4.2	5.8	* 4.2	6.2	5.8	* 5.8	* 4.2	* 6.2
Max Green Setting (Gmax), s	* 5.7	50.3	* 5.8	37.8	21.8	* 34	* 5.4	* 39
Max Q Clear Time (g_c+I1), s	3.5	2.0	7.8	40.5	20.7	23.8	6.1	8.0
Green Ext Time (p_c), s	0.0	4.3	0.0	0.0	0.3	3.3	0.0	15.1

Intersection Summary	
HCM 2010 Ctrl Delay	246.9
HCM 2010 LOS	F

Notes

APPENDIX 6.2:

OPENING YEAR CUMULATIVE (2020) WITH PROJECT CONDITIONS INTERSECTION OPERATIONS ANALYSIS WORKSHEETS

This Page Intentionally Left Blank

Movement	EBL	EBT	EBR	WBL	WBT	WBR	NBL	NBT	NBR	SBL	SBT	SBR
Lane Configurations												
Traffic Volume (veh/h)	0	717	44	313	335	0	0	0	0	1581	3	369
Future Volume (veh/h)	0	717	44	313	335	0	0	0	0	1581	3	369
Number	5	2	12	1	6	16				7	4	14
Initial Q (Qb), veh	0	0	0	0	0	0				0	0	0
Ped-Bike Adj(A_pbT)	1.00		1.00	1.00		1.00				1.00		1.00
Parking Bus, Adj	1.00	1.00	1.00	1.00	1.00	1.00				1.00	1.00	1.00
Adj Sat Flow, veh/h/ln	0	1900	1900	1900	1900	0				1900	1900	1900
Adj Flow Rate, veh/h	0	788	45	344	368	0				1737	3	340
Adj No. of Lanes	0	2	1	1	2	0				0	1	1
Peak Hour Factor	0.91	0.91	0.91	0.91	0.91	0.91				0.91	0.91	0.91
Percent Heavy Veh, %	0	0	0	0	0	0				0	0	0
Cap, veh/h	0	722	323	467	1805	0				1009	2	902
Arrive On Green	0.00	0.20	0.20	0.52	1.00	0.00				0.56	0.56	0.56
Sat Flow, veh/h	0	3705	1615	1810	3705	0				1807	3	1615
Grp Volume(v), veh/h	0	788	45	344	368	0				1740	0	340
Grp Sat Flow(s),veh/h/ln	0	1805	1615	1810	1805	0				1810	0	1615
Q Serve(g_s), s	0.0	24.0	2.8	17.8	0.0	0.0				67.0	0.0	14.1
Cycle Q Clear(g_c), s	0.0	24.0	2.8	17.8	0.0	0.0				67.0	0.0	14.1
Prop In Lane	0.00		1.00	1.00		0.00				1.00		1.00
Lane Grp Cap(c), veh/h	0	722	323	467	1805	0				1010	0	902
V/C Ratio(X)	0.00	1.09	0.14	0.74	0.20	0.00				1.72	0.00	0.38
Avail Cap(c_a), veh/h	0	722	323	467	1805	0				1010	0	902
HCM Platoon Ratio	1.00	1.00	1.00	2.00	2.00	1.00				1.00	1.00	1.00
Upstream Filter(I)	0.00	1.00	1.00	0.87	0.87	0.00				1.00	0.00	1.00
Uniform Delay (d), s/veh	0.0	48.0	39.5	25.8	0.0	0.0				26.5	0.0	14.8
Incr Delay (d2), s/veh	0.0	61.2	0.9	4.6	0.2	0.0				329.1	0.0	0.3
Initial Q Delay(d3),s/veh	0.0	0.0	0.0	0.0	0.0	0.0				0.0	0.0	0.0
%ile BackOfQ(50%),veh/ln	0.0	18.1	1.3	9.4	0.1	0.0				125.5	0.0	6.3
LnGrp Delay(d),s/veh	0.0	109.2	40.4	30.4	0.2	0.0				355.6	0.0	15.1
LnGrp LOS		F	D	C	A					F		B
Approach Vol, veh/h		833			712						2080	
Approach Delay, s/veh		105.4			14.8						300.0	
Approach LOS		F			B						F	

Timer	1	2	3	4	5	6	7	8
Assigned Phs	1	2		4		6		
Phs Duration (G+Y+Rc), s	36.5	29.0		72.0		65.5		
Change Period (Y+Rc), s	5.0	* 5		5.0		5.0		
Max Green Setting (Gmax), s	14.5	* 24		67.0		43.0		
Max Q Clear Time (g_c+I1), s	19.8	26.0		69.0		2.0		
Green Ext Time (p_c), s	0.0	0.0		0.0		1.8		

Intersection Summary	
HCM 2010 Ctrl Delay	199.3
HCM 2010 LOS	F

Notes

Movement	EBL	EBT	EBR	WBL	WBT	WBR	NBL	NBT	NBR	SBL	SBT	SBR
Lane Configurations												
Traffic Volume (veh/h)	438	1860	0	0	554	860	93	4	414	0	0	0
Future Volume (veh/h)	438	1860	0	0	554	860	93	4	414	0	0	0
Number	5	2	12	1	6	16	3	8	18			
Initial Q (Qb), veh	0	0	0	0	0	0	0	0	0			
Ped-Bike Adj(A_pbT)	1.00		1.00	1.00		1.00	1.00		1.00			
Parking Bus, Adj	1.00	1.00	1.00	1.00	1.00	1.00	1.00	1.00	1.00			
Adj Sat Flow, veh/h/ln	1900	1900	0	0	1900	1900	1900	1900	1900			
Adj Flow Rate, veh/h	503	2138	0	0	637	963	107	5	422			
Adj No. of Lanes	1	2	0	0	2	1	0	1	1			
Peak Hour Factor	0.87	0.87	0.87	0.87	0.87	0.87	0.87	0.87	0.87			
Percent Heavy Veh, %	0	0	0	0	0	0	0	0	0			
Cap, veh/h	616	2703	0	0	1324	592	433	20	404			
Arrive On Green	0.68	1.00	0.00	0.00	0.37	0.37	0.25	0.25	0.25			
Sat Flow, veh/h	1810	3705	0	0	3705	1615	1732	81	1615			
Grp Volume(v), veh/h	503	2138	0	0	637	963	112	0	422			
Grp Sat Flow(s),veh/h/ln	1810	1805	0	0	1805	1615	1813	0	1615			
Q Serve(g_s), s	24.0	0.0	0.0	0.0	16.3	44.0	5.9	0.0	30.0			
Cycle Q Clear(g_c), s	24.0	0.0	0.0	0.0	16.3	44.0	5.9	0.0	30.0			
Prop In Lane	1.00		0.00	0.00		1.00	0.96		1.00			
Lane Grp Cap(c), veh/h	616	2703	0	0	1324	592	453	0	404			
V/C Ratio(X)	0.82	0.79	0.00	0.00	0.48	1.63	0.25	0.00	1.05			
Avail Cap(c_a), veh/h	616	2703	0	0	1324	592	453	0	404			
HCM Platoon Ratio	2.00	2.00	1.00	1.00	1.00	1.00	1.00	1.00	1.00			
Upstream Filter(I)	0.09	0.09	0.00	0.00	1.00	1.00	1.00	0.00	1.00			
Uniform Delay (d), s/veh	16.5	0.0	0.0	0.0	29.2	38.0	36.0	0.0	45.0			
Incr Delay (d2), s/veh	0.8	0.2	0.0	0.0	1.3	289.5	1.3	0.0	57.1			
Initial Q Delay(d3),s/veh	0.0	0.0	0.0	0.0	0.0	0.0	0.0	0.0	0.0			
%ile BackOfQ(50%),veh/ln	11.6	0.1	0.0	0.0	8.4	67.2	3.1	0.0	19.7			
LnGrp Delay(d),s/veh	17.2	0.2	0.0	0.0	30.5	327.5	37.3	0.0	102.1			
LnGrp LOS	B	A			C	F	D		F			
Approach Vol, veh/h		2641			1600			534				
Approach Delay, s/veh		3.5			209.2			88.5				
Approach LOS		A			F			F				

Timer	1	2	3	4	5	6	7	8
Assigned Phs		2			5	6		8
Phs Duration (G+Y+Rc), s		94.9			45.9	49.0		35.0
Change Period (Y+Rc), s		5.0			5.0	* 5		5.0
Max Green Setting (Gmax), s		80.0			32.5	* 44		30.0
Max Q Clear Time (g_c+I1), s		2.0			26.0	46.0		32.0
Green Ext Time (p_c), s		22.0			5.1	0.0		0.0

Intersection Summary	
HCM 2010 Ctrl Delay	81.9
HCM 2010 LOS	F

Notes

Intersection	
Int Delay, s/veh	390.4

Movement	EBL	EBT	WBT	WBR	SBL	SBR
Traffic Vol, veh/h	75	2200	1340	29	2	75
Future Vol, veh/h	75	2200	1340	29	2	75
Conflicting Peds, #/hr	0	0	0	0	0	0
Sign Control	Free	Free	Free	Free	Stop	Stop
RT Channelized	-	None	-	None	-	None
Storage Length	-	-	-	0	0	-
Veh in Median Storage, #	-	0	0	-	0	-
Grade, %	-	0	0	-	0	-
Peak Hour Factor	82	82	82	82	82	82
Heavy Vehicles, %	0	0	0	0	0	0
Mvmt Flow	91	2683	1634	35	2	91

Major/Minor	Major1		Major2		Minor2	
Conflicting Flow All	1634	0	-	0	3158	817
Stage 1	-	-	-	-	1634	-
Stage 2	-	-	-	-	1524	-
Critical Hdwy	10	-	-	-	6.8	6.9
Critical Hdwy Stg 1	-	-	-	-	5.8	-
Critical Hdwy Stg 2	-	-	-	-	5.8	-
Follow-up Hdwy	2.2	-	-	-	3.5	3.3
Pot Cap-1 Maneuver	~ 28	-	-	-	*~ 0	324
Stage 1	-	-	-	-	*148	-
Stage 2	-	-	-	-	*151	-
Platoon blocked, %		-	-	-	1	
Mov Cap-1 Maneuver	~ 28	-	-	-	*0	324
Mov Cap-2 Maneuver	-	-	-	-	*0	-
Stage 1	-	-	-	-	*148	-
Stage 2	-	-	-	-	*151	-

Approach	EB	WB	SB
HCM Control Delay, s	$ 637.9	0	20.6
HCM LOS			C

Minor Lane/Major Mvmt	EBL	EBT	WBT	WBR	SBLn1
Capacity (veh/h)	~ 28	-	-	-	324
HCM Lane V/C Ratio	3.267	-	-	-	0.29
HCM Control Delay (s)	$ 1313.7	$ 614.9	-	-	20.6
HCM Lane LOS	F	F	-	-	C
HCM 95th %tile Q(veh)	11	-	-	-	1.2

Notes

~: Volume exceeds capacity $: Delay exceeds 300s +: Computation Not Defined *: All major volume in platoon

Movement	EBL	EBT	EBR	WBL	WBT	WBR	NBL	NBT	NBR	SBL	SBT	SBR
Lane Configurations												
Traffic Volume (veh/h)	87	2031	12	13	1215	15	99	2	40	3	4	20
Future Volume (veh/h)	87	2031	12	13	1215	15	99	2	40	3	4	20
Number	5	2	12	1	6	16	3	8	18	7	4	14
Initial Q (Qb), veh	0	0	0	0	0	0	0	0	0	0	0	0
Ped-Bike Adj(A_pbT)	1.00		1.00	1.00		1.00	1.00		1.00	1.00		1.00
Parking Bus, Adj	1.00	1.00	1.00	1.00	1.00	1.00	1.00	1.00	1.00	1.00	1.00	1.00
Adj Sat Flow, veh/h/ln	1900	1900	1900	1900	1900	1900	1900	1900	1900	1900	1900	1900
Adj Flow Rate, veh/h	106	2477	13	16	1482	18	121	2	44	4	5	22
Adj No. of Lanes	1	2	1	1	2	1	0	1	0	0	1	1
Peak Hour Factor	0.82	0.82	0.82	0.82	0.82	0.82	0.82	0.82	0.82	0.82	0.82	0.82
Percent Heavy Veh, %	0	0	0	0	0	0	0	0	0	0	0	0
Cap, veh/h	131	2041	913	31	1842	824	354	13	113	241	286	471
Arrive On Green	0.07	0.57	0.57	0.02	0.51	0.51	0.29	0.29	0.29	0.29	0.29	0.29
Sat Flow, veh/h	1810	3610	1615	1810	3610	1615	1035	46	387	676	981	1615
Grp Volume(v), veh/h	106	2477	13	16	1482	18	167	0	0	9	0	22
Grp Sat Flow(s),veh/h/ln	1810	1805	1615	1810	1805	1615	1468	0	0	1658	0	1615
Q Serve(g_s), s	6.9	67.8	0.4	1.1	40.9	0.7	10.0	0.0	0.0	0.0	0.0	1.2
Cycle Q Clear(g_c), s	6.9	67.8	0.4	1.1	40.9	0.7	10.8	0.0	0.0	0.4	0.0	1.2
Prop In Lane	1.00		1.00	1.00		1.00	0.72		0.26	0.44		1.00
Lane Grp Cap(c), veh/h	131	2041	913	31	1842	824	480	0	0	527	0	471
V/C Ratio(X)	0.81	1.21	0.01	0.51	0.80	0.02	0.35	0.00	0.00	0.02	0.00	0.05
Avail Cap(c_a), veh/h	157	2041	913	75	1842	824	480	0	0	527	0	471
HCM Platoon Ratio	1.00	1.00	1.00	1.00	1.00	1.00	1.00	1.00	1.00	1.00	1.00	1.00
Upstream Filter(I)	1.00	1.00	1.00	1.00	1.00	1.00	1.00	0.00	0.00	1.00	0.00	1.00
Uniform Delay (d), s/veh	54.8	26.1	11.4	58.5	24.4	14.6	33.9	0.0	0.0	30.2	0.0	30.5
Incr Delay (d2), s/veh	19.3	101.0	0.0	4.8	3.9	0.0	2.0	0.0	0.0	0.1	0.0	0.2
Initial Q Delay(d3),s/veh	0.0	0.0	0.0	0.0	0.0	0.0	0.0	0.0	0.0	0.0	0.0	0.0
%ile BackOfQ(50%),veh/ln	4.2	62.1	0.2	0.6	21.4	0.3	4.7	0.0	0.0	0.2	0.0	0.6
LnGrp Delay(d),s/veh	74.1	127.1	11.5	63.3	28.3	14.6	35.8	0.0	0.0	30.3	0.0	30.7
LnGrp LOS	E	F	B	E	C	B	D			C		C
Approach Vol, veh/h		2596			1516			167			31	
Approach Delay, s/veh		124.3			28.5			35.8			30.6	
Approach LOS		F			C			D			C	

Timer	1	2	3	4	5	6	7	8
Assigned Phs	1	2		4	5	6		8
Phs Duration (G+Y+Rc), s	6.3	73.6		40.1	12.9	67.0		40.1
Change Period (Y+Rc), s	* 4.2	5.8		5.1	* 4.2	5.8		5.1
Max Green Setting (Gmax), s	* 5	64.9		35.0	* 10	59.5		35.0
Max Q Clear Time (g_c+I1), s	3.1	69.8		3.2	8.9	42.9		12.8
Green Ext Time (p_c), s	0.0	0.0		0.7	0.0	15.4		0.6

Intersection Summary	
HCM 2010 Ctrl Delay	86.5
HCM 2010 LOS	F

Notes

Intersection	
Int Delay, s/veh	0

Movement	EBT	EBR	WBL	WBT	NBL	NBR
Traffic Vol, veh/h	2036	31	0	1243	0	5
Future Vol, veh/h	2036	31	0	1243	0	5
Conflicting Peds, #/hr	0	0	0	0	0	0
Sign Control	Free	Free	Free	Free	Stop	Stop
RT Channelized	-	None	-	None	-	None
Storage Length	-	-	-	-	-	0
Veh in Median Storage, #	0	-	-	0	0	-
Grade, %	0	-	-	0	0	-
Peak Hour Factor	86	86	86	86	86	86
Heavy Vehicles, %	0	0	0	0	0	0
Mvmt Flow	2367	36	0	1445	0	6

Major/Minor	Major1		Major2		Minor1	
Conflicting Flow All	0	0	2403	0	2963	1202
Stage 1	-	-	-	-	2385	-
Stage 2	-	-	-	-	578	-
Critical Hdwy	-	-	5.3	-	5.7	7.1
Critical Hdwy Stg 1	-	-	-	-	6.6	-
Critical Hdwy Stg 2	-	-	-	-	6	-
Follow-up Hdwy	-	-	3.1	-	3.8	3.9
Pot Cap-1 Maneuver	-	-	498	-	*297	*440
Stage 1	-	-	-	-	*416	-
Stage 2	-	-	-	-	*652	-
Platoon blocked, %	-	-	1	-	1	1
Mov Cap-1 Maneuver	-	-	498	-	*297	*440
Mov Cap-2 Maneuver	-	-	-	-	*297	-
Stage 1	-	-	-	-	*416	-
Stage 2	-	-	-	-	*652	-

Approach	EB	WB	NB
HCM Control Delay, s	0	0	13.3
HCM LOS			B

Minor Lane/Major Mvmt	NBLn1	EBT	EBR	WBL	WBT
Capacity (veh/h)	440	-	-	498	-
HCM Lane V/C Ratio	0.013	-	-	-	-
HCM Control Delay (s)	13.3	-	-	0	-
HCM Lane LOS	B	-	-	A	-
HCM 95th %tile Q(veh)	0	-	-	0	-

Notes			
~: Volume exceeds capacity	$: Delay exceeds 300s	+: Computation Not Defined	*: All major volume in platoon

Movement	EBL	EBT	EBR	WBL	WBT	WBR	NBL	NBT	NBR	SBL	SBT	SBR
Lane Configurations												
Traffic Volume (veh/h)	5	32	183	97	24	8	289	1462	122	11	455	24
Future Volume (veh/h)	5	32	183	97	24	8	289	1462	122	11	455	24
Number	7	4	14	3	8	18	5	2	12	1	6	16
Initial Q (Qb), veh	0	0	0	0	0	0	0	0	0	0	0	0
Ped-Bike Adj(A_pbT)	1.00		1.00	1.00		1.00	1.00		1.00	1.00		0.98
Parking Bus, Adj	1.00	1.00	1.00	1.00	1.00	1.00	1.00	1.00	1.00	1.00	1.00	1.00
Adj Sat Flow, veh/h/ln	1900	1900	1900	1900	1900	1900	1900	1900	1900	1900	1900	1900
Adj Flow Rate, veh/h	6	38	166	115	29	9	344	1740	138	13	542	28
Adj No. of Lanes	1	1	1	1	1	1	1	2	0	1	2	0
Peak Hour Factor	0.84	0.84	0.84	0.84	0.84	0.84	0.84	0.84	0.84	0.84	0.84	0.84
Percent Heavy Veh, %	0	0	0	0	0	0	0	0	0	0	0	0
Cap, veh/h	14	192	495	124	307	260	373	2192	172	27	1587	82
Arrive On Green	0.01	0.10	0.10	0.07	0.16	0.16	0.21	0.65	0.65	0.01	0.45	0.45
Sat Flow, veh/h	1810	1900	1615	1810	1900	1612	1810	3392	266	1810	3489	180
Grp Volume(v), veh/h	6	38	166	115	29	9	344	917	961	13	280	290
Grp Sat Flow(s),veh/h/ln	1810	1900	1615	1810	1900	1612	1810	1805	1853	1810	1805	1864
Q Serve(g_s), s	0.4	2.2	9.5	7.6	1.6	0.6	22.4	43.8	45.8	0.9	12.0	12.1
Cycle Q Clear(g_c), s	0.4	2.2	9.5	7.6	1.6	0.6	22.4	43.8	45.8	0.9	12.0	12.1
Prop In Lane	1.00		1.00	1.00		1.00	1.00		0.14	1.00		0.10
Lane Grp Cap(c), veh/h	14	192	495	124	307	260	373	1166	1197	27	821	848
V/C Ratio(X)	0.44	0.20	0.34	0.93	0.09	0.03	0.92	0.79	0.80	0.49	0.34	0.34
Avail Cap(c_a), veh/h	80	380	656	124	426	361	519	1166	1197	81	821	848
HCM Platoon Ratio	1.00	1.00	1.00	1.00	1.00	1.00	1.00	1.00	1.00	1.00	1.00	1.00
Upstream Filter(I)	1.00	1.00	1.00	1.00	1.00	1.00	1.00	1.00	1.00	1.00	1.00	1.00
Uniform Delay (d), s/veh	59.3	49.5	32.1	55.6	42.8	42.4	46.7	15.3	15.6	58.7	21.1	21.1
Incr Delay (d2), s/veh	8.0	0.2	0.1	58.8	0.0	0.0	15.3	5.4	5.8	5.1	1.1	1.1
Initial Q Delay(d3),s/veh	0.0	0.0	0.0	0.0	0.0	0.0	0.0	0.0	0.0	0.0	0.0	0.0
%ile BackOfQ(50%),veh/ln	0.2	1.2	4.3	5.8	0.8	0.3	12.8	23.4	25.1	0.5	6.2	6.5
LnGrp Delay(d),s/veh	67.3	49.7	32.3	114.4	42.9	42.4	62.0	20.6	21.4	63.8	22.2	22.2
LnGrp LOS	E	D	C	F	D	D	E	C	C	E	C	C
Approach Vol, veh/h		210			153			2222			583	
Approach Delay, s/veh		36.4			96.6			27.3			23.2	
Approach LOS		D			F			C			C	

Timer	1	2	3	4	5	6	7	8
Assigned Phs	1	2	3	4	5	6	7	8
Phs Duration (G+Y+Rc), s	6.0	83.7	12.4	17.9	28.9	60.8	5.1	25.2
Change Period (Y+Rc), s	* 4.2	6.2	* 4.2	5.8	* 4.2	6.2	* 4.2	5.8
Max Green Setting (Gmax), s	* 5.4	62.0	* 8.2	24.0	* 34	33.0	* 5.3	26.9
Max Q Clear Time (g_c+I1), s	2.9	47.8	9.6	11.5	24.4	14.1	2.4	3.6
Green Ext Time (p_c), s	0.0	8.8	0.0	0.4	0.4	10.6	0.0	0.4

Intersection Summary	
HCM 2010 Ctrl Delay	30.5
HCM 2010 LOS	C

Notes

Intersection	
Int Delay, s/veh	1.1

Movement	WBL	WBR	NBT	NBR	SBL	SBT
Traffic Vol, veh/h	26	6	1851	38	1	736
Future Vol, veh/h	26	6	1851	38	1	736
Conflicting Peds, #/hr	0	0	0	0	0	0
Sign Control	Stop	Stop	Free	Free	Free	Free
RT Channelized	-	None	-	None	-	None
Storage Length	210	0	-	-	120	-
Veh in Median Storage, #	2	-	0	-	-	0
Grade, %	0	-	0	-	-	0
Peak Hour Factor	84	84	84	84	84	84
Heavy Vehicles, %	0	0	0	0	0	0
Mvmt Flow	31	7	2204	45	1	876

Major/Minor	Minor1		Major1		Major2	
Conflicting Flow All	3105	2226	0	0	2249	0
Stage 1	2226	-	-	-	-	-
Stage 2	879	-	-	-	-	-
Critical Hdwy	6.4	6.2	-	-	4.1	-
Critical Hdwy Stg 1	5.4	-	-	-	-	-
Critical Hdwy Stg 2	5.4	-	-	-	-	-
Follow-up Hdwy	3.5	3.3	-	-	2.2	-
Pot Cap-1 Maneuver	0	55	-	-	232	-
Stage 1	89	-	-	-	-	-
Stage 2	420	-	-	-	-	-
Platoon blocked, %	1		-	-		-
Mov Cap-1 Maneuver	0	55	-	-	232	-
Mov Cap-2 Maneuver	67	-	-	-	-	-
Stage 1	89	-	-	-	-	-
Stage 2	418	-	-	-	-	-

Approach	WB	NB	SB
HCM Control Delay, s	95	0	0
HCM LOS	F		

Minor Lane/Major Mvmt	NBT	NBR	WBLn1	WBLn2	SBL	SBT
Capacity (veh/h)	-	-	67	55	232	-
HCM Lane V/C Ratio	-	-	0.462	0.13	0.005	-
HCM Control Delay (s)	-	-	98.4	80	20.6	-
HCM Lane LOS	-	-	F	F	C	-
HCM 95th %tile Q(veh)	-	-	1.8	0.4	0	-

Intersection	
Int Delay, s/veh	0.2

Movement	EBL	EBT	EBR	WBL	WBT	WBR	NBL	NBT	NBR	SBL	SBT	SBR
Traffic Vol, veh/h	7	0	11	4	0	2	31	1879	5	2	739	20
Future Vol, veh/h	7	0	11	4	0	2	31	1879	5	2	739	20
Conflicting Peds, #/hr	0	0	0	0	0	0	0	0	0	0	0	0
Sign Control	Stop	Stop	Stop	Stop	Stop	Stop	Free	Free	Free	Free	Free	Free
RT Channelized	-	-	None	-	-	None	-	-	None	-	-	None
Storage Length	-	-	-	-	-	-	100	-	-	50	-	-
Veh in Median Storage, #	-	2	-	-	2	-	-	0	-	-	0	-
Grade, %	-	0	-	-	0	-	-	0	-	-	0	-
Peak Hour Factor	92	92	92	92	92	92	92	92	92	92	92	92
Heavy Vehicles, %	0	0	0	0	0	0	0	0	0	0	0	0
Mvmt Flow	8	0	12	4	0	2	34	2042	5	2	803	22

Major/Minor	Minor2			Minor1			Major1			Major2		
Conflicting Flow All	1907	2933	413	2519	2942	1024	825	0	0	2048	0	0
Stage 1	818	818	-	2113	2113	-	-	-	-	-	-	-
Stage 2	1089	2115	-	406	829	-	-	-	-	-	-	-
Critical Hdwy	5.2	6.5	5.2	5	6.5	6.9	4.1	-	-	4.1	-	-
Critical Hdwy Stg 1	6.5	5.5	-	5	5.5	-	-	-	-	-	-	-
Critical Hdwy Stg 2	6.5	5.5	-	5	5.5	-	-	-	-	-	-	-
Follow-up Hdwy	3.5	4	3.3	3.5	4	3.3	2.2	-	-	2.2	-	-
Pot Cap-1 Maneuver	162	12	*801	*74	12	236	1163	-	-	278	-	-
Stage 1	726	642	-	*129	93	-	-	-	-	-	-	-
Stage 2	233	92	-	*755	633	-	-	-	-	-	-	-
Platoon blocked, %	1	1	1	1	1		1	-	-		-	-
Mov Cap-1 Maneuver	156	11	*801	*71	11	236	1163	-	-	278	-	-
Mov Cap-2 Maneuver	210	82	-	*118	84	-	-	-	-	-	-	-
Stage 1	705	637	-	*125	90	-	-	-	-	-	-	-
Stage 2	224	89	-	*739	628	-	-	-	-	-	-	-

Approach	EB	WB	NB	SB
HCM Control Delay, s	14.9	31.6	0.1	0
HCM LOS	B	D		

Minor Lane/Major Mvmt	NBL	NBT	NBR	EBLn1	WBLn1	SBL	SBT	SBR
Capacity (veh/h)	1163	-	-	382	142	278	-	-
HCM Lane V/C Ratio	0.029	-	-	0.051	0.046	0.008	-	-
HCM Control Delay (s)	8.2	-	-	14.9	31.6	18.1	-	-
HCM Lane LOS	A	-	-	B	D	C	-	-
HCM 95th %tile Q(veh)	0.1	-	-	0.2	0.1	0	-	-

Notes

~: Volume exceeds capacity $: Delay exceeds 300s +: Computation Not Defined *: All major volume in platoon

Intersection	
Int Delay, s/veh	0.3

Movement	EBL	EBR	NBL	NBT	SBT	SBR
Traffic Vol, veh/h	2	20	63	1908	747	3
Future Vol, veh/h	2	20	63	1908	747	3
Conflicting Peds, #/hr	0	0	0	0	0	0
Sign Control	Stop	Stop	Free	Free	Free	Free
RT Channelized	-	None	-	None	-	None
Storage Length	0	-	100	-	-	-
Veh in Median Storage, #	2	-	-	0	0	-
Grade, %	0	-	-	0	0	-
Peak Hour Factor	92	92	92	92	92	92
Heavy Vehicles, %	0	0	0	0	0	0
Mvmt Flow	2	22	68	2074	812	3

Major/Minor	Minor2		Major1		Major2	
Conflicting Flow All	1988	408	815	0	-	0
Stage 1	814	-	-	-	-	-
Stage 2	1174	-	-	-	-	-
Critical Hdwy	5.2	5.2	4.1	-	-	-
Critical Hdwy Stg 1	5.8	-	-	-	-	-
Critical Hdwy Stg 2	5.8	-	-	-	-	-
Follow-up Hdwy	3.5	3.3	2.2	-	-	-
Pot Cap-1 Maneuver	144	*801	1176	-	-	-
Stage 1	735	-	-	-	-	-
Stage 2	260	-	-	-	-	-
Platoon blocked, %	1	1	1	-	-	-
Mov Cap-1 Maneuver	136	*801	1176	-	-	-
Mov Cap-2 Maneuver	208	-	-	-	-	-
Stage 1	735	-	-	-	-	-
Stage 2	245	-	-	-	-	-

Approach	EB	NB	SB
HCM Control Delay, s	10.9	0.3	0
HCM LOS	B		

Minor Lane/Major Mvmt	NBL	NBT	EBLn1	SBT	SBR
Capacity (veh/h)	1176	-	636	-	-
HCM Lane V/C Ratio	0.058	-	0.038	-	-
HCM Control Delay (s)	8.2	-	10.9	-	-
HCM Lane LOS	A	-	B	-	-
HCM 95th %tile Q(veh)	0.2	-	0.1	-	-

Notes			
~: Volume exceeds capacity	$: Delay exceeds 300s	+: Computation Not Defined	*: All major volume in platoon

Movement	EBL	EBT	EBR	WBL	WBT	WBR	NBL	NBT	NBR	SBL	SBT	SBR
Lane Configurations												
Traffic Volume (veh/h)	1023	877	148	22	609	60	114	222	21	16	80	477
Future Volume (veh/h)	1023	877	148	22	609	60	114	222	21	16	80	477
Number	5	2	12	1	6	16	3	8	18	7	4	14
Initial Q (Qb), veh	0	0	0	0	0	0	0	0	0	0	0	0
Ped-Bike Adj(A_pbT)	1.00		1.00	1.00		0.99	1.00		1.00	1.00		1.00
Parking Bus, Adj	1.00	1.00	1.00	1.00	1.00	1.00	1.00	1.00	1.00	1.00	1.00	1.00
Adj Sat Flow, veh/h/ln	1900	1900	1900	1900	1900	1900	1900	1900	1900	1900	1900	1900
Adj Flow Rate, veh/h	1112	953	153	24	662	58	124	241	9	17	87	486
Adj No. of Lanes	1	3	1	1	3	0	2	2	1	1	2	0
Peak Hour Factor	0.92	0.92	0.92	0.92	0.92	0.92	0.92	0.92	0.92	0.92	0.92	0.92
Percent Heavy Veh, %	0	0	0	0	0	0	0	0	0	0	0	0
Cap, veh/h	1200	4852	1511	42	1368	119	146	1108	496	33	511	458
Arrive On Green	0.66	0.94	0.94	0.02	0.28	0.28	0.04	0.31	0.31	0.02	0.28	0.28
Sat Flow, veh/h	1810	5187	1615	1810	4855	422	3510	3610	1615	1810	1805	1615
Grp Volume(v), veh/h	1112	953	153	24	470	250	124	241	9	17	87	486
Grp Sat Flow(s),veh/h/ln	1810	1729	1615	1810	1729	1819	1755	1805	1615	1810	1805	1615
Q Serve(g_s), s	64.4	1.7	0.8	1.6	13.6	13.7	4.2	5.9	0.5	1.1	4.4	34.0
Cycle Q Clear(g_c), s	64.4	1.7	0.8	1.6	13.6	13.7	4.2	5.9	0.5	1.1	4.4	34.0
Prop In Lane	1.00		1.00	1.00		0.23	1.00		1.00	1.00		1.00
Lane Grp Cap(c), veh/h	1200	4852	1511	42	974	512	146	1108	496	33	511	458
V/C Ratio(X)	0.93	0.20	0.10	0.58	0.48	0.49	0.85	0.22	0.02	0.52	0.17	1.06
Avail Cap(c_a), veh/h	1200	4852	1511	87	974	512	146	1108	496	75	511	458
HCM Platoon Ratio	1.00	1.00	1.00	1.00	1.00	1.00	1.00	1.00	1.00	1.00	1.00	1.00
Upstream Filter(I)	1.00	1.00	1.00	1.00	1.00	1.00	1.00	1.00	1.00	1.00	1.00	1.00
Uniform Delay (d), s/veh	17.6	0.3	0.3	58.0	35.8	35.9	57.1	30.9	29.0	58.4	32.4	43.0
Incr Delay (d2), s/veh	12.0	0.1	0.1	4.7	1.7	3.3	33.2	0.5	0.1	4.7	0.7	59.5
Initial Q Delay(d3),s/veh	0.0	0.0	0.0	0.0	0.0	0.0	0.0	0.0	0.0	0.0	0.0	0.0
%ile BackOfQ(50%),veh/ln	35.8	0.8	0.4	0.8	6.7	7.3	2.7	3.0	0.2	0.6	2.3	22.7
LnGrp Delay(d),s/veh	29.6	0.4	0.4	62.7	37.5	39.2	90.3	31.3	29.0	63.1	33.1	102.5
LnGrp LOS	C	A	A	E	D	D	F	C	C	E	C	F
Approach Vol, veh/h		2218			744			374			590	
Approach Delay, s/veh		15.1			38.9			50.8			91.2	
Approach LOS		B			D			D			F	

Timer	1	2	3	4	5	6	7	8
Assigned Phs	1	2	3	4	5	6	7	8
Phs Duration (G+Y+Rc), s	7.0	119.6	9.2	40.2	87.0	39.6	6.4	43.0
Change Period (Y+Rc), s	* 4.2	5.8	* 4.2	6.2	5.8	* 5.8	* 4.2	* 6.2
Max Green Setting (Gmax), s	* 5.8	54.8	* 5	34.0	26.8	* 34	* 5	* 35
Max Q Clear Time (g_c+I1), s	3.6	3.7	6.2	36.0	66.4	15.7	3.1	7.9
Green Ext Time (p_c), s	0.0	8.2	0.0	0.0	0.0	2.6	0.0	3.3

Intersection Summary	
HCM 2010 Ctrl Delay	34.4
HCM 2010 LOS	C

Notes

Movement	EBL	EBT	EBR	WBL	WBT	WBR	NBL	NBT	NBR	SBL	SBT	SBR
Lane Configurations												
Traffic Volume (veh/h)	0	713	132	704	203	0	0	0	0	874	3	313
Future Volume (veh/h)	0	713	132	704	203	0	0	0	0	874	3	313
Number	5	2	12	1	6	16				7	4	14
Initial Q (Qb), veh	0	0	0	0	0	0				0	0	0
Ped-Bike Adj(A_pbT)	1.00		1.00	1.00		1.00				1.00		1.00
Parking Bus, Adj	1.00	1.00	1.00	1.00	1.00	1.00				1.00	1.00	1.00
Adj Sat Flow, veh/h/ln	0	1900	1900	1900	1900	0				1900	1900	1900
Adj Flow Rate, veh/h	0	810	140	800	231	0				993	3	283
Adj No. of Lanes	0	2	1	1	2	0				0	1	1
Peak Hour Factor	0.88	0.88	0.88	0.88	0.88	0.88				0.88	0.88	0.88
Percent Heavy Veh, %	0	0	0	0	0	0				0	0	0
Cap, veh/h	0	752	336	784	2467	0				677	2	606
Arrive On Green	0.00	0.21	0.21	0.14	0.23	0.00				0.38	0.38	0.38
Sat Flow, veh/h	0	3705	1615	1810	3705	0				1804	5	1615
Grp Volume(v), veh/h	0	810	140	800	231	0				996	0	283
Grp Sat Flow(s),veh/h/ln	0	1805	1615	1810	1805	0				1810	0	1615
Q Serve(g_s), s	0.0	25.0	9.0	52.0	6.1	0.0				45.0	0.0	15.9
Cycle Q Clear(g_c), s	0.0	25.0	9.0	52.0	6.1	0.0				45.0	0.0	15.9
Prop In Lane	0.00		1.00	1.00		0.00				1.00		1.00
Lane Grp Cap(c), veh/h	0	752	336	784	2467	0				679	0	606
V/C Ratio(X)	0.00	1.08	0.42	1.02	0.09	0.00				1.47	0.00	0.47
Avail Cap(c_a), veh/h	0	752	336	784	2467	0				679	0	606
HCM Platoon Ratio	1.00	1.00	1.00	0.33	0.33	1.00				1.00	1.00	1.00
Upstream Filter(I)	0.00	1.00	1.00	0.86	0.86	0.00				1.00	0.00	1.00
Uniform Delay (d), s/veh	0.0	47.5	41.2	51.4	17.1	0.0				37.5	0.0	28.4
Incr Delay (d2), s/veh	0.0	55.5	3.8	35.1	0.1	0.0				218.4	0.0	0.6
Initial Q Delay(d3),s/veh	0.0	0.0	0.0	0.0	0.0	0.0				0.0	0.0	0.0
%ile BackOfQ(50%),veh/ln	0.0	18.2	4.4	33.7	3.1	0.0				63.6	0.0	7.2
LnGrp Delay(d),s/veh	0.0	103.0	44.9	86.5	17.1	0.0				255.9	0.0	29.0
LnGrp LOS		F	D	F	B					F		C
Approach Vol, veh/h		950			1031						1279	
Approach Delay, s/veh		94.5			71.0						205.7	
Approach LOS		F			E						F	

Timer	1	2	3	4	5	6	7	8
Assigned Phs	1	2		4		6		
Phs Duration (G+Y+Rc), s	57.5	30.0		50.0		87.5		
Change Period (Y+Rc), s	5.0	* 5		5.0		5.0		
Max Green Setting (Gmax), s	35.5	* 25		45.0		65.0		
Max Q Clear Time (g_c+I1), s	54.0	27.0		47.0		8.1		
Green Ext Time (p_c), s	0.0	0.0		0.0		2.1		

Intersection Summary	
HCM 2010 Ctrl Delay	130.7
HCM 2010 LOS	F

Notes

Movement	EBL	EBT	EBR	WBL	WBT	WBR	NBL	NBT	NBR	SBL	SBT	SBR
Lane Configurations												
Traffic Volume (veh/h)	509	1077	0	0	857	1695	51	0	297	0	0	0
Future Volume (veh/h)	509	1077	0	0	857	1695	51	0	297	0	0	0
Number	5	2	12	1	6	16	3	8	18			
Initial Q (Qb), veh	0	0	0	0	0	0	0	0	0			
Ped-Bike Adj(A_pbT)	1.00		1.00	1.00		0.99	1.00		1.00			
Parking Bus, Adj	1.00	1.00	1.00	1.00	1.00	1.00	1.00	1.00	1.00			
Adj Sat Flow, veh/h/ln	1900	1900	0	0	1900	1900	1900	1900	1900			
Adj Flow Rate, veh/h	606	1282	0	0	1020	2007	61	0	186			
Adj No. of Lanes	1	2	0	0	2	1	0	1	1			
Peak Hour Factor	0.84	0.84	0.84	0.84	0.84	0.84	0.84	0.84	0.84			
Percent Heavy Veh, %	0	0	0	0	0	0	0	0	0			
Cap, veh/h	783	3788	0	0	2076	917	226	0	202			
Arrive On Green	0.87	1.00	0.00	0.00	0.57	0.57	0.13	0.00	0.13			
Sat Flow, veh/h	1810	3705	0	0	3705	1595	1810	0	1615			
Grp Volume(v), veh/h	606	1282	0	0	1020	2007	61	0	186			
Grp Sat Flow(s),veh/h/ln	1810	1805	0	0	1805	1595	1810	0	1615			
Q Serve(g_s), s	16.4	0.0	0.0	0.0	20.1	69.0	3.7	0.0	13.7			
Cycle Q Clear(g_c), s	16.4	0.0	0.0	0.0	20.1	69.0	3.7	0.0	13.7			
Prop In Lane	1.00		0.00	0.00		1.00	1.00		1.00			
Lane Grp Cap(c), veh/h	783	3788	0	0	2076	917	226	0	202			
V/C Ratio(X)	0.77	0.34	0.00	0.00	0.49	2.19	0.27	0.00	0.92			
Avail Cap(c_a), veh/h	783	3788	0	0	2076	917	226	0	202			
HCM Platoon Ratio	2.00	2.00	1.00	1.00	1.00	1.00	1.00	1.00	1.00			
Upstream Filter(I)	0.09	0.09	0.00	0.00	1.00	1.00	1.00	0.00	1.00			
Uniform Delay (d), s/veh	5.7	0.0	0.0	0.0	15.1	25.5	47.5	0.0	51.9			
Incr Delay (d2), s/veh	0.4	0.0	0.0	0.0	0.8	538.4	2.9	0.0	45.6			
Initial Q Delay(d3),s/veh	0.0	0.0	0.0	0.0	0.0	0.0	0.0	0.0	0.0			
%ile BackOfQ(50%),veh/ln	7.5	0.0	0.0	0.0	10.2	167.2	2.0	0.0	8.7			
LnGrp Delay(d),s/veh	6.1	0.0	0.0	0.0	15.9	563.9	50.5	0.0	97.5			
LnGrp LOS	A	A			B	F	D		F			
Approach Vol, veh/h		1888			3027			247				
Approach Delay, s/veh		2.0			379.2			85.9				
Approach LOS		A			F			F				

Timer	1	2	3	4	5	6	7	8
Assigned Phs		2			5	6		8
Phs Duration (G+Y+Rc), s		130.9			56.9	74.0		20.0
Change Period (Y+Rc), s		5.0			5.0	* 5		5.0
Max Green Setting (Gmax), s		95.0			22.5	* 69		15.0
Max Q Clear Time (g_c+I1), s		2.0			18.4	71.0		15.7
Green Ext Time (p_c), s		8.2			2.6	0.0		0.0

Intersection Summary	
HCM 2010 Ctrl Delay	227.2
HCM 2010 LOS	F

Notes

Intersection	
Int Delay, s/veh	9.5

Movement	EBL	EBT	WBT	WBR	SBL	SBR
Traffic Vol, veh/h	22	1352	2457	7	15	93
Future Vol, veh/h	22	1352	2457	7	15	93
Conflicting Peds, #/hr	0	0	0	0	0	0
Sign Control	Free	Free	Free	Free	Stop	Stop
RT Channelized	-	None	-	None	-	None
Storage Length	-	-	-	0	0	-
Veh in Median Storage, #	-	0	0	-	0	-
Grade, %	-	0	0	-	0	-
Peak Hour Factor	88	88	88	88	88	88
Heavy Vehicles, %	0	0	0	0	0	0
Mvmt Flow	25	1536	2792	8	17	106

Major/Minor	Major1		Major2		Minor2	
Conflicting Flow All	2792	0	-	0	3610	1396
Stage 1	-	-	-	-	2792	-
Stage 2	-	-	-	-	818	-
Critical Hdwy	4.1	-	-	-	6.8	6.9
Critical Hdwy Stg 1	-	-	-	-	5.8	-
Critical Hdwy Stg 2	-	-	-	-	5.8	-
Follow-up Hdwy	2.2	-	-	-	3.5	3.3
Pot Cap-1 Maneuver	142	-	-	-	*~ 0	133
Stage 1	-	-	-	-	*33	-
Stage 2	-	-	-	-	*490	-
Platoon blocked, %		-	-	-	1	
Mov Cap-1 Maneuver	142	-	-	-	*0	133
Mov Cap-2 Maneuver	-	-	-	-	*0	-
Stage 1	-	-	-	-	*33	-
Stage 2	-	-	-	-	*490	-

Approach	EB	WB	SB
HCM Control Delay, s	17.6	0	122.1
HCM LOS			F

Minor Lane/Major Mvmt	EBL	EBT	WBT	WBR	SBLn1
Capacity (veh/h)	142	-	-	-	133
HCM Lane V/C Ratio	0.176	-	-	-	0.923
HCM Control Delay (s)	35.7	17.3	-	-	122.1
HCM Lane LOS	E	C	-	-	F
HCM 95th %tile Q(veh)	0.6	-	-	-	6.2

Notes

~: Volume exceeds capacity $: Delay exceeds 300s +: Computation Not Defined *: All major volume in platoon

Movement	EBL	EBT	EBR	WBL	WBT	WBR	NBL	NBT	NBR	SBL	SBT	SBR
Lane Configurations												
Traffic Volume (veh/h)	20	1287	26	41	2269	3	71	4	21	7	2	94
Future Volume (veh/h)	20	1287	26	41	2269	3	71	4	21	7	2	94
Number	5	2	12	1	6	16	3	8	18	7	4	14
Initial Q (Qb), veh	0	0	0	0	0	0	0	0	0	0	0	0
Ped-Bike Adj(A_pbT)	1.00		1.00	1.00		1.00	1.00		1.00	1.00		1.00
Parking Bus, Adj	1.00	1.00	1.00	1.00	1.00	1.00	1.00	1.00	1.00	1.00	1.00	1.00
Adj Sat Flow, veh/h/ln	1900	1900	1900	1900	1900	1900	1900	1900	1900	1900	1900	1900
Adj Flow Rate, veh/h	24	1514	31	48	2669	3	84	5	20	8	2	104
Adj No. of Lanes	1	2	1	1	2	1	0	1	0	0	1	1
Peak Hour Factor	0.85	0.85	0.85	0.85	0.85	0.85	0.85	0.85	0.85	0.85	0.85	0.85
Percent Heavy Veh, %	0	0	0	0	0	0	0	0	0	0	0	0
Cap, veh/h	42	1979	885	62	2020	904	357	26	74	402	95	471
Arrive On Green	0.02	0.55	0.55	0.03	0.56	0.56	0.29	0.29	0.29	0.29	0.29	0.29
Sat Flow, veh/h	1810	3610	1615	1810	3610	1615	1042	88	254	1192	325	1615
Grp Volume(v), veh/h	24	1514	31	48	2669	3	109	0	0	10	0	104
Grp Sat Flow(s),veh/h/ln	1810	1805	1615	1810	1805	1615	1384	0	0	1517	0	1615
Q Serve(g_s), s	1.6	39.2	1.1	3.2	67.1	0.1	6.5	0.0	0.0	0.0	0.0	5.9
Cycle Q Clear(g_c), s	1.6	39.2	1.1	3.2	67.1	0.1	7.1	0.0	0.0	0.4	0.0	5.9
Prop In Lane	1.00		1.00	1.00		1.00	0.77		0.18	0.80		1.00
Lane Grp Cap(c), veh/h	42	1979	885	62	2020	904	457	0	0	497	0	471
V/C Ratio(X)	0.58	0.77	0.04	0.77	1.32	0.00	0.24	0.00	0.00	0.02	0.00	0.22
Avail Cap(c_a), veh/h	75	1979	885	89	2020	904	457	0	0	497	0	471
HCM Platoon Ratio	1.00	1.00	1.00	1.00	1.00	1.00	1.00	1.00	1.00	1.00	1.00	1.00
Upstream Filter(I)	1.00	1.00	1.00	1.00	1.00	1.00	1.00	0.00	0.00	1.00	0.00	1.00
Uniform Delay (d), s/veh	58.0	21.1	12.5	57.5	26.4	11.7	32.5	0.0	0.0	30.3	0.0	32.2
Incr Delay (d2), s/veh	4.7	2.9	0.1	13.3	148.2	0.0	1.2	0.0	0.0	0.1	0.0	1.1
Initial Q Delay(d3),s/veh	0.0	0.0	0.0	0.0	0.0	0.0	0.0	0.0	0.0	0.0	0.0	0.0
%ile BackOfQ(50%),veh/ln	0.8	20.1	0.5	1.8	74.7	0.0	2.9	0.0	0.0	0.2	0.0	2.7
LnGrp Delay(d),s/veh	62.7	24.0	12.6	70.8	174.6	11.7	33.8	0.0	0.0	30.3	0.0	33.3
LnGrp LOS	E	C	B	E	F	B	C			C		C
Approach Vol, veh/h		1569			2720			109			114	
Approach Delay, s/veh		24.3			172.6			33.8			33.0	
Approach LOS		C			F			C			C	

Timer	1	2	3	4	5	6	7	8
Assigned Phs	1	2		4	5	6		8
Phs Duration (G+Y+Rc), s	8.3	71.6		40.1	7.0	72.9		40.1
Change Period (Y+Rc), s	* 4.2	5.8		5.1	* 4.2	5.8		5.1
Max Green Setting (Gmax), s	* 5.9	64.0		35.0	* 5	64.9		35.0
Max Q Clear Time (g_c+I1), s	5.2	41.2		7.9	3.6	69.1		9.1
Green Ext Time (p_c), s	0.0	21.2		0.6	0.0	0.0		0.6

Intersection Summary	
HCM 2010 Ctrl Delay	114.1
HCM 2010 LOS	F

Notes

Intersection	
Int Delay, s/veh	0

Movement	EBT	EBR	WBL	WBT	NBL	NBR
Traffic Vol, veh/h	1276	20	0	2298	0	7
Future Vol, veh/h	1276	20	0	2298	0	7
Conflicting Peds, #/hr	0	0	0	0	0	0
Sign Control	Free	Free	Free	Free	Stop	Stop
RT Channelized	-	None	-	None	-	None
Storage Length	-	-	-	-	-	0
Veh in Median Storage, #	0	-	-	0	0	-
Grade, %	0	-	-	0	0	-
Peak Hour Factor	87	87	87	87	87	87
Heavy Vehicles, %	0	0	0	0	0	0
Mvmt Flow	1467	23	0	2641	0	8

Major/Minor	Major1		Major2		Minor1	
Conflicting Flow All	0	0	1490	0	2535	745
Stage 1	-	-	-	-	1478	-
Stage 2	-	-	-	-	1057	-
Critical Hdwy	-	-	5.3	-	5.7	7.1
Critical Hdwy Stg 1	-	-	-	-	6.6	-
Critical Hdwy Stg 2	-	-	-	-	6	-
Follow-up Hdwy	-	-	3.1	-	3.8	3.9
Pot Cap-1 Maneuver	-	-	750	-	*49	*623
Stage 1	-	-	-	-	*619	-
Stage 2	-	-	-	-	*384	-
Platoon blocked, %	-	-	1	-		1
Mov Cap-1 Maneuver	-	-	750	-	*49	*623
Mov Cap-2 Maneuver	-	-	-	-	*49	-
Stage 1	-	-	-	-	*619	-
Stage 2	-	-	-	-	*384	-

Approach	EB	WB	NB
HCM Control Delay, s	0	0	10.9
HCM LOS			B

Minor Lane/Major Mvmt	NBLn1	EBT	EBR	WBL	WBT
Capacity (veh/h)	623	-	-	750	-
HCM Lane V/C Ratio	0.013	-	-	-	-
HCM Control Delay (s)	10.9	-	-	0	-
HCM Lane LOS	B	-	-	A	-
HCM 95th %tile Q(veh)	0	-	-	0	-

Notes			
~: Volume exceeds capacity	$: Delay exceeds 300s	+: Computation Not Defined	*: All major volume in platoon

Movement	EBL	EBT	EBR	WBL	WBT	WBR	NBL	NBT	NBR	SBL	SBT	SBR
Lane Configurations												
Traffic Volume (veh/h)	39	102	458	221	71	37	148	754	117	71	1461	68
Future Volume (veh/h)	39	102	458	221	71	37	148	754	117	71	1461	68
Number	7	4	14	3	8	18	5	2	12	1	6	16
Initial Q (Qb), veh	0	0	0	0	0	0	0	0	0	0	0	0
Ped-Bike Adj(A_pbT)	1.00		1.00	1.00		0.96	1.00		0.99	1.00		1.00
Parking Bus, Adj	1.00	1.00	1.00	1.00	1.00	1.00	1.00	1.00	1.00	1.00	1.00	1.00
Adj Sat Flow, veh/h/ln	1900	1900	1900	1900	1900	1900	1900	1900	1900	1900	1900	1900
Adj Flow Rate, veh/h	51	134	433	291	93	16	195	992	120	93	1922	57
Adj No. of Lanes	1	1	1	1	1	1	1	2	0	1	2	0
Peak Hour Factor	0.76	0.76	0.76	0.76	0.76	0.76	0.76	0.76	0.76	0.76	0.76	0.76
Percent Heavy Veh, %	0	0	0	0	0	0	0	0	0	0	0	0
Cap, veh/h	66	380	468	208	554	454	163	1414	171	925	3131	92
Arrive On Green	0.04	0.20	0.20	0.12	0.29	0.29	0.09	0.44	0.44	0.51	0.87	0.87
Sat Flow, veh/h	1810	1900	1611	1810	1900	1557	1810	3238	392	1810	3581	106
Grp Volume(v), veh/h	51	134	433	291	93	16	195	553	559	93	964	1015
Grp Sat Flow(s),veh/h/ln	1810	1900	1611	1810	1900	1557	1810	1805	1825	1810	1805	1881
Q Serve(g_s), s	3.4	7.3	24.0	13.8	4.4	0.7	10.8	29.8	29.9	3.2	17.3	17.6
Cycle Q Clear(g_c), s	3.4	7.3	24.0	13.8	4.4	0.7	10.8	29.8	29.9	3.2	17.3	17.6
Prop In Lane	1.00		1.00	1.00		1.00	1.00		0.21	1.00		0.06
Lane Grp Cap(c), veh/h	66	380	468	208	554	454	163	788	797	925	1579	1645
V/C Ratio(X)	0.77	0.35	0.93	1.40	0.17	0.04	1.20	0.70	0.70	0.10	0.61	0.62
Avail Cap(c_a), veh/h	133	380	468	208	554	454	163	788	797	925	1579	1645
HCM Platoon Ratio	1.00	1.00	1.00	1.00	1.00	1.00	1.00	1.00	1.00	1.00	1.00	1.00
Upstream Filter(I)	1.00	1.00	1.00	1.00	1.00	1.00	1.00	1.00	1.00	1.00	1.00	1.00
Uniform Delay (d), s/veh	57.3	41.3	124.3	53.1	31.6	19.0	54.6	27.4	27.5	15.1	2.0	2.1
Incr Delay (d2), s/veh	6.9	0.2	24.2	205.7	0.1	0.0	133.4	5.2	5.1	0.0	1.8	1.7
Initial Q Delay(d3),s/veh	0.0	0.0	0.0	0.0	0.0	0.0	0.0	0.0	0.0	0.0	0.0	0.0
%ile BackOfQ(50%),veh/ln	1.8	3.9	3.1	18.8	2.3	0.3	11.4	15.9	16.2	1.6	9.1	9.5
LnGrp Delay(d),s/veh	64.2	41.5	148.4	258.8	31.7	19.0	188.0	32.6	32.6	15.1	3.8	3.8
LnGrp LOS	E	D	F	F	C	B	F	C	C	B	A	A
Approach Vol, veh/h		618			400			1307			2072	
Approach Delay, s/veh		118.3			196.4			55.8			4.3	
Approach LOS		F			F			E			A	

Timer	1	2	3	4	5	6	7	8
Assigned Phs	1	2	3	4	5	6	7	8
Phs Duration (G+Y+Rc), s	69.2	58.6	19.6	29.8	15.0	112.8	8.6	40.8
Change Period (Y+Rc), s	6.2	* 6.2	5.8	* 5.8	* 4.2	6.2	* 4.2	5.8
Max Green Setting (Gmax), s	9.4	* 52	13.8	* 24	* 11	51.0	* 8.8	29.0
Max Q Clear Time (g_c+I1), s	5.2	31.9	15.8	26.0	12.8	19.6	5.4	6.4
Green Ext Time (p_c), s	2.6	4.0	0.0	0.0	0.0	11.3	0.0	0.7

Intersection Summary	
HCM 2010 Ctrl Delay	53.1
HCM 2010 LOS	D

Notes

Intersection	
Int Delay, s/veh	0.1

Movement	WBL	WBR	NBT	NBR	SBL	SBT
Traffic Vol, veh/h	41	14	1011	51	16	2045
Future Vol, veh/h	41	14	1011	51	16	2045
Conflicting Peds, #/hr	0	0	0	1	0	0
Sign Control	Stop	Stop	Free	Free	Free	Free
RT Channelized	-	None	-	None	-	None
Storage Length	210	0	-	-	120	-
Veh in Median Storage, #	2	-	0	-	-	0
Grade, %	0	-	0	-	-	0
Peak Hour Factor	77	77	77	77	77	77
Heavy Vehicles, %	0	0	0	0	0	0
Mvmt Flow	53	18	1313	66	21	2656

Major/Minor	Minor1		Major1		Major2	
Conflicting Flow All	4043	1346	0	0	1379	0
Stage 1	1346	-	-	-	-	-
Stage 2	2697	-	-	-	-	-
Critical Hdwy	6.4	6.2	-	-	4.1	-
Critical Hdwy Stg 1	5.4	-	-	-	-	-
Critical Hdwy Stg 2	5.4	-	-	-	-	-
Follow-up Hdwy	3.5	3.3	-	-	2.2	-
Pot Cap-1 Maneuver	-	187	-	-	504	-
Stage 1	245	-	-	-	-	-
Stage 2	-	-	-	-	-	-
Platoon blocked, %	2		-	-		-
Mov Cap-1 Maneuver	-	187	-	-	504	-
Mov Cap-2 Maneuver	-	-	-	-	-	-
Stage 1	245	-	-	-	-	-
Stage 2	-	-	-	-	-	-

Approach	WB	NB	SB
HCM Control Delay, s		0	0.1
HCM LOS	-		

Minor Lane/Major Mvmt	NBT	NBR	WBLn1	WBLn2	SBL	SBT
Capacity (veh/h)	-	-	-	187	504	-
HCM Lane V/C Ratio	-	-	-	0.097	0.041	-
HCM Control Delay (s)	-	-	-	26.3	12.4	-
HCM Lane LOS	-	-	-	D	B	-
HCM 95th %tile Q(veh)	-	-	-	0.3	0.1	-

Intersection	
Int Delay, s/veh	0.6

Movement	EBL	EBT	EBR	WBL	WBT	WBR	NBL	NBT	NBR	SBL	SBT	SBR
Traffic Vol, veh/h	18	0	28	7	0	4	14	1040	2	1	2076	9
Future Vol, veh/h	18	0	28	7	0	4	14	1040	2	1	2076	9
Conflicting Peds, #/hr	0	0	0	0	0	0	0	0	0	0	0	0
Sign Control	Stop	Stop	Stop	Stop	Stop	Stop	Free	Free	Free	Free	Free	Free
RT Channelized	-	-	None	-	-	None	-	-	None	-	-	None
Storage Length	-	-	-	-	-	-	100	-	-	50	-	-
Veh in Median Storage, #	-	2	-	-	2	-	-	0	-	-	0	-
Grade, %	-	0	-	-	0	-	-	0	-	-	0	-
Peak Hour Factor	92	92	92	92	92	92	92	92	92	92	92	92
Heavy Vehicles, %	0	0	0	0	0	0	0	0	0	0	0	0
Mvmt Flow	20	0	30	8	0	4	15	1130	2	1	2257	10

Major/Minor	Minor2			Minor1			Major1			Major2		
Conflicting Flow All	2860	3427	1133	2292	3430	566	2266	0	0	1133	0	0
Stage 1	2264	2264	-	1162	1162	-	-	-	-	-	-	-
Stage 2	596	1163	-	1130	2268	-	-	-	-	-	-	-
Critical Hdwy	5.2	6.5	5.2	5	6.5	6.9	4.1	-	-	4.1	-	-
Critical Hdwy Stg 1	6.5	5.5	-	5	5.5	-	-	-	-	-	-	-
Critical Hdwy Stg 2	6.5	5.5	-	5	5.5	-	-	-	-	-	-	-
Follow-up Hdwy	3.5	4	3.3	3.5	4	3.3	2.2	-	-	2.2	-	-
Pot Cap-1 Maneuver	*~ 18	*0	*206	*195	*0	473	*309	-	-	624	-	-
Stage 1	*194	*170	-	*342	*272	-	-	-	-	-	-	-
Stage 2	*462	*271	-	*195	*170	-	-	-	-	-	-	-
Platoon blocked, %	1	1	1	1	1		1	-	-		-	-
Mov Cap-1 Maneuver	*~ 17	*0	*206	*159	*0	473	*309	-	-	624	-	-
Mov Cap-2 Maneuver	*159	*128	-	*143	*120	-	-	-	-	-	-	-
Stage 1	*185	*170	-	*325	*259	-	-	-	-	-	-	-
Stage 2	*436	*258	-	*166	*170	-	-	-	-	-	-	-

Approach	EB	WB	NB	SB
HCM Control Delay, s	31.5	25	0.2	0
HCM LOS	D	D		

Minor Lane/Major Mvmt	NBL	NBT	NBR	EBLn1	WBLn1	SBL	SBT	SBR
Capacity (veh/h)	* 309	-	-	185	192	624	-	-
HCM Lane V/C Ratio	0.049	-	-	0.27	0.062	0.002	-	-
HCM Control Delay (s)	17.3	-	-	31.5	25	10.8	-	-
HCM Lane LOS	C	-	-	D	D	B	-	-
HCM 95th %tile Q(veh)	0.2	-	-	1	0.2	0	-	-

Notes

~: Volume exceeds capacity $: Delay exceeds 300s +: Computation Not Defined *: All major volume in platoon

Intersection	
Int Delay, s/veh	0.8

Movement	EBL	EBR	NBL	NBT	SBT	SBR
Traffic Vol, veh/h	6	58	31	1048	2102	2
Future Vol, veh/h	6	58	31	1048	2102	2
Conflicting Peds, #/hr	0	0	0	0	0	0
Sign Control	Stop	Stop	Free	Free	Free	Free
RT Channelized	-	None	-	None	-	None
Storage Length	0	-	100	-	-	-
Veh in Median Storage, #	2	-	-	0	0	-
Grade, %	0	-	-	0	0	-
Peak Hour Factor	92	92	92	92	92	92
Heavy Vehicles, %	0	0	0	0	0	0
Mvmt Flow	7	63	34	1139	2285	2

Major/Minor	Minor2		Major1		Major2	
Conflicting Flow All	2923	1143	2287	0	-	0
Stage 1	2286	-	-	-	-	-
Stage 2	637	-	-	-	-	-
Critical Hdwy	5.2	5.2	4.1	-	-	-
Critical Hdwy Stg 1	5.8	-	-	-	-	-
Critical Hdwy Stg 2	5.8	-	-	-	-	-
Follow-up Hdwy	3.5	3.3	2.2	-	-	-
Pot Cap-1 Maneuver	*13	*206	*309	-	-	-
Stage 1	*194	-	-	-	-	-
Stage 2	*494	-	-	-	-	-
Platoon blocked, %	1	1	1	-	-	-
Mov Cap-1 Maneuver	*11	*206	*309	-	-	-
Mov Cap-2 Maneuver	*127	-	-	-	-	-
Stage 1	*194	-	-	-	-	-
Stage 2	*440	-	-	-	-	-

Approach	EB	NB	SB
HCM Control Delay, s	33.4	0.5	0
HCM LOS	D		

Minor Lane/Major Mvmt	NBL	NBT	EBLn1	SBT	SBR
Capacity (veh/h)	* 309	-	195	-	-
HCM Lane V/C Ratio	0.109	-	0.357	-	-
HCM Control Delay (s)	18.1	-	33.4	-	-
HCM Lane LOS	C	-	D	-	-
HCM 95th %tile Q(veh)	0.4	-	1.5	-	-

Notes			
~: Volume exceeds capacity	$: Delay exceeds 300s	+: Computation Not Defined	*: All major volume in platoon

Movement	EBL	EBT	EBR	WBL	WBT	WBR	NBL	NBT	NBR	SBL	SBT	SBR
Lane Configurations												
Traffic Volume (veh/h)	717	488	112	19	863	37	168	205	27	63	238	1268
Future Volume (veh/h)	717	488	112	19	863	37	168	205	27	63	238	1268
Number	5	2	12	1	6	16	3	8	18	7	4	14
Initial Q (Qb), veh	0	0	0	0	0	0	0	0	0	0	0	0
Ped-Bike Adj(A_pbT)	1.00		1.00	1.00		1.00	1.00		1.00	1.00		1.00
Parking Bus, Adj	1.00	1.00	1.00	1.00	1.00	1.00	1.00	1.00	1.00	1.00	1.00	1.00
Adj Sat Flow, veh/h/ln	1900	1900	1900	1900	1900	1900	1900	1900	1900	1900	1900	1900
Adj Flow Rate, veh/h	874	595	128	23	1052	34	205	250	23	77	290	1463
Adj No. of Lanes	1	3	1	1	3	0	2	2	1	1	2	0
Peak Hour Factor	0.82	0.82	0.82	0.82	0.82	0.82	0.82	0.82	0.82	0.82	0.82	0.82
Percent Heavy Veh, %	0	0	0	0	0	0	0	0	0	0	0	0
Cap, veh/h	1523	5797	1805	40	1471	48	170	1173	524	81	581	519
Arrive On Green	0.84	1.00	1.00	0.02	0.28	0.28	0.05	0.33	0.33	0.05	0.32	0.32
Sat Flow, veh/h	1810	5187	1615	1810	5162	167	3510	3610	1614	1810	1805	1615
Grp Volume(v), veh/h	874	595	128	23	705	381	205	250	23	77	290	1463
Grp Sat Flow(s),veh/h/ln	1810	1729	1615	1810	1729	1871	1755	1805	1614	1810	1805	1615
Q Serve(g_s), s	17.8	0.0	0.0	1.5	22.0	22.0	5.8	6.0	1.2	5.1	15.6	38.6
Cycle Q Clear(g_c), s	17.8	0.0	0.0	1.5	22.0	22.0	5.8	6.0	1.2	5.1	15.6	38.6
Prop In Lane	1.00		1.00	1.00		0.09	1.00		1.00	1.00		1.00
Lane Grp Cap(c), veh/h	1523	5797	1805	40	986	533	170	1173	524	81	581	519
V/C Ratio(X)	0.57	0.10	0.07	0.57	0.71	0.72	1.21	0.21	0.04	0.95	0.50	2.82
Avail Cap(c_a), veh/h	1523	5797	1805	86	986	533	170	1173	524	81	581	519
HCM Platoon Ratio	1.00	1.00	1.00	1.00	1.00	1.00	1.00	1.00	1.00	1.00	1.00	1.00
Upstream Filter(I)	1.00	1.00	1.00	1.00	1.00	1.00	1.00	1.00	1.00	1.00	1.00	1.00
Uniform Delay (d), s/veh	2.9	0.0	0.0	58.1	38.5	38.5	57.1	29.4	27.7	57.2	32.9	40.7
Incr Delay (d2), s/veh	0.3	0.0	0.1	4.6	4.4	8.0	136.1	0.4	0.2	80.6	3.1	822.6
Initial Q Delay(d3),s/veh	0.0	0.0	0.0	0.0	0.0	0.0	0.0	0.0	0.0	0.0	0.0	0.0
%ile BackOfQ(50%),veh/ln	8.6	0.0	0.0	0.8	11.1	12.5	6.0	3.1	0.5	4.4	8.2	135.9
LnGrp Delay(d),s/veh	3.3	0.0	0.1	62.7	42.9	46.5	193.2	29.8	27.9	137.7	35.9	863.3
LnGrp LOS	A	A	A	E	D	D	F	C	C	F	D	F
Approach Vol, veh/h		1597			1109			478			1830	
Approach Delay, s/veh		1.8			44.6			99.8			701.7	
Approach LOS		A			D			F			F	

Timer	1	2	3	4	5	6	7	8
Assigned Phs	1	2	3	4	5	6	7	8
Phs Duration (G+Y+Rc), s	6.9	140.9	10.0	44.8	107.8	40.0	9.6	45.2
Change Period (Y+Rc), s	* 4.2	5.8	* 4.2	6.2	5.8	* 5.8	* 4.2	* 6.2
Max Green Setting (Gmax), s	* 5.7	50.3	* 5.8	37.8	21.8	* 34	* 5.4	* 39
Max Q Clear Time (g_c+I1), s	3.5	2.0	7.8	40.6	19.8	24.0	7.1	8.0
Green Ext Time (p_c), s	0.0	4.4	0.0	0.0	0.7	3.3	0.0	17.3

Intersection Summary	
HCM 2010 Ctrl Delay	276.0
HCM 2010 LOS	F

Notes

APPENDIX 6.3:

OPENING YEAR CUMULATIVE (2020) WITHOUT PROJECT CONDITIONS OFF-RAMP QUEUING ANALYSIS WORKSHEETS

This Page Intentionally Left Blank

Lane Group	EBT	EBR	WBL	WBT	SBT	SBR
Lane Group Flow (vph)	788	48	336	368	1663	405
v/c Ratio	1.09	0.13	1.54	0.28	1.65	0.41
Control Delay	106.1	6.7	286.8	13.0	319.5	8.7
Queue Delay	94.5	0.0	0.0	0.0	0.1	0.0
Total Delay	200.7	6.7	286.8	13.0	319.5	8.7
Queue Length 50th (ft)	~362	0	~366	58	~1867	81
Queue Length 95th (ft)	#488	22	#506	81	#2131	149
Internal Link Dist (ft)	844			267	1109	
Turn Bay Length (ft)		100	80			270
Base Capacity (vph)	722	374	218	1293	1010	987
Starvation Cap Reductn	0	0	0	0	0	0
Spillback Cap Reductn	703	0	0	0	13	0
Storage Cap Reductn	0	0	0	0	0	0
Reduced v/c Ratio	41.47	0.13	1.54	0.28	1.67	0.41

Intersection Summary

~ Volume exceeds capacity, queue is theoretically infinite.
Queue shown is maximum after two cycles.

95th percentile volume exceeds capacity, queue may be longer.
Queue shown is maximum after two cycles.

Lane Group	EBL	EBT	WBT	WBR	NBT	NBR
Lane Group Flow (vph)	503	2057	629	968	112	467
v/c Ratio	1.03	0.85	0.48	1.02	0.25	1.04
Control Delay	96.0	15.9	30.6	49.5	37.8	90.2
Queue Delay	29.0	48.0	0.0	0.0	0.0	0.0
Total Delay	125.0	63.9	30.6	49.5	37.8	90.2
Queue Length 50th (ft)	367	414	195	~455	70	~349
Queue Length 95th (ft)	m309	m270	240	#685	117	#528
Internal Link Dist (ft)		267	594		929	
Turn Bay Length (ft)	60			100		265
Base Capacity (vph)	488	2406	1323	953	453	451
Starvation Cap Reductn	182	1150	0	0	0	0
Spillback Cap Reductn	0	0	0	0	0	0
Storage Cap Reductn	0	0	0	0	0	0
Reduced v/c Ratio	1.64	1.64	0.48	1.02	0.25	1.04

Intersection Summary

~ Volume exceeds capacity, queue is theoretically infinite.
Queue shown is maximum after two cycles.

95th percentile volume exceeds capacity, queue may be longer.
Queue shown is maximum after two cycles.

m Volume for 95th percentile queue is metered by upstream signal.

Lane Group	EBT	EBR	WBL	WBT	SBT	SBR
Lane Group Flow (vph)	810	150	777	231	956	356
v/c Ratio	1.08	0.39	1.46	0.12	1.41	0.48
Control Delay	100.6	25.7	240.9	5.7	223.6	13.4
Queue Delay	13.5	0.0	0.0	0.0	0.3	0.0
Total Delay	114.1	25.7	240.9	5.7	223.8	13.4
Queue Length 50th (ft)	~368	54	~829	25	~994	78
Queue Length 95th (ft)	#476	113	#1039	35	#1205	157
Internal Link Dist (ft)	844			267	1109	
Turn Bay Length (ft)		100	80			270
Base Capacity (vph)	752	389	533	1955	679	737
Starvation Cap Reductn	0	0	0	0	0	0
Spillback Cap Reductn	333	0	0	0	26	0
Storage Cap Reductn	0	0	0	0	0	0
Reduced v/c Ratio	1.93	0.39	1.46	0.12	1.46	0.48

Intersection Summary

~ Volume exceeds capacity, queue is theoretically infinite.
Queue shown is maximum after two cycles.

95th percentile volume exceeds capacity, queue may be longer.
Queue shown is maximum after two cycles.

Lane Group	EBL	EBT	WBT	WBR	NBT	NBR
Lane Group Flow (vph)	606	1240	996	1956	61	350
v/c Ratio	1.79	0.43	0.48	1.76	0.27	1.09
Control Delay	396.7	11.4	15.9	364.1	51.1	105.4
Queue Delay	1.4	50.2	0.4	0.0	0.0	0.0
Total Delay	398.1	61.6	16.4	364.1	51.1	105.4
Queue Length 50th (ft)	~630	303	226	~2115	43	~204
Queue Length 95th (ft)	m#502	m201	252	#2149	81	#345
Internal Link Dist (ft)		267	594		929	
Turn Bay Length (ft)	60			100		265
Base Capacity (vph)	338	2857	2075	1113	225	322
Starvation Cap Reductn	38	1871	0	0	0	0
Spillback Cap Reductn	0	0	556	0	0	0
Storage Cap Reductn	0	0	0	0	0	0
Reduced v/c Ratio	2.02	1.26	0.66	1.76	0.27	1.09

Intersection Summary

~ Volume exceeds capacity, queue is theoretically infinite.
Queue shown is maximum after two cycles.

95th percentile volume exceeds capacity, queue may be longer.
Queue shown is maximum after two cycles.

m Volume for 95th percentile queue is metered by upstream signal.

APPENDIX 6.4:

OPENING YEAR CUMULATIVE (2020) WITH PROJECT CONDITIONS OFF-RAMP QUEUING ANALYSIS WORKSHEETS

This Page Intentionally Left Blank

Lane Group	EBT	EBR	WBL	WBT	SBT	SBR
Lane Group Flow (vph)	788	48	344	368	1740	405
v/c Ratio	1.09	0.13	1.58	0.28	1.72	0.41
Control Delay	106.1	6.7	302.3	13.2	353.0	9.0
Queue Delay	626.3	0.0	0.0	0.0	0.1	0.0
Total Delay	732.4	6.7	302.3	13.2	353.1	9.0
Queue Length 50th (ft)	~362	0	~380	58	~1991	85
Queue Length 95th (ft)	#488	22	#520	83	#2255	153
Internal Link Dist (ft)	844			267	1109	
Turn Bay Length (ft)		100	80			270
Base Capacity (vph)	722	374	218	1293	1010	984
Starvation Cap Reductn	0	0	0	0	0	0
Spillback Cap Reductn	722	0	0	0	22	0
Storage Cap Reductn	0	0	0	0	0	0
Reduced v/c Ratio	788.00	0.13	1.58	0.28	1.76	0.41

Intersection Summary

~ Volume exceeds capacity, queue is theoretically infinite.
Queue shown is maximum after two cycles.

95th percentile volume exceeds capacity, queue may be longer.
Queue shown is maximum after two cycles.

Lane Group	EBL	EBT	WBT	WBR	NBT	NBR
Lane Group Flow (vph)	503	2138	637	989	112	476
v/c Ratio	1.03	0.89	0.48	1.04	0.25	1.06
Control Delay	96.3	16.3	30.7	56.2	37.8	95.7
Queue Delay	29.0	47.6	0.0	0.0	0.0	0.0
Total Delay	125.3	63.9	30.7	56.2	37.8	95.7
Queue Length 50th (ft)	365	427	197	~526	70	~364
Queue Length 95th (ft)	m306	m270	242	#720	117	#544
Internal Link Dist (ft)		267	594		929	
Turn Bay Length (ft)	60			100		265
Base Capacity (vph)	488	2406	1323	953	453	451
Starvation Cap Reductn	182	1149	0	0	0	0
Spillback Cap Reductn	0	0	0	0	0	0
Storage Cap Reductn	0	0	0	0	0	0
Reduced v/c Ratio	1.64	1.70	0.48	1.04	0.25	1.06

Intersection Summary

~ Volume exceeds capacity, queue is theoretically infinite.
Queue shown is maximum after two cycles.

95th percentile volume exceeds capacity, queue may be longer.
Queue shown is maximum after two cycles.

m Volume for 95th percentile queue is metered by upstream signal.

Lane Group	EBT	EBR	WBL	WBT	SBT	SBR
Lane Group Flow (vph)	810	150	800	231	996	356
v/c Ratio	1.08	0.39	1.50	0.12	1.47	0.49
Control Delay	100.6	25.7	259.4	5.7	248.5	14.2
Queue Delay	13.5	0.0	0.0	0.0	0.4	0.0
Total Delay	114.1	25.7	259.4	5.7	249.0	14.2
Queue Length 50th (ft)	~368	54	~867	25	~1058	84
Queue Length 95th (ft)	#476	113	#1077	35	#1268	163
Internal Link Dist (ft)	844			267	1109	
Turn Bay Length (ft)		100	80			270
Base Capacity (vph)	752	389	533	1955	679	731
Starvation Cap Reductn	0	0	0	0	0	0
Spillback Cap Reductn	333	0	0	0	41	0
Storage Cap Reductn	0	0	0	0	0	0
Reduced v/c Ratio	1.93	0.39	1.50	0.12	1.56	0.49

Intersection Summary

~ Volume exceeds capacity, queue is theoretically infinite.
Queue shown is maximum after two cycles.

95th percentile volume exceeds capacity, queue may be longer.
Queue shown is maximum after two cycles.

Lane Group	EBL	EBT	WBT	WBR	NBT	NBR
Lane Group Flow (vph)	606	1282	1020	2018	61	354
v/c Ratio	1.79	0.45	0.49	1.81	0.27	1.13
Control Delay	396.8	11.8	16.1	388.8	51.1	120.3
Queue Delay	1.4	50.2	0.5	0.0	0.0	0.0
Total Delay	398.1	62.0	16.6	388.8	51.1	120.3
Queue Length 50th (ft)	~629	321	234	~2216	43	~224
Queue Length 95th (ft)	m#500	m203	260	#2244	81	#365
Internal Link Dist (ft)		267	594		929	
Turn Bay Length (ft)	60			100		265
Base Capacity (vph)	338	2857	2075	1113	225	314
Starvation Cap Reductn	38	1869	0	0	0	0
Spillback Cap Reductn	0	0	558	0	0	0
Storage Cap Reductn	0	0	0	0	0	0
Reduced v/c Ratio	2.02	1.30	0.67	1.81	0.27	1.13

Intersection Summary

~ Volume exceeds capacity, queue is theoretically infinite.
Queue shown is maximum after two cycles.

95th percentile volume exceeds capacity, queue may be longer.
Queue shown is maximum after two cycles.

m Volume for 95th percentile queue is metered by upstream signal.

APPENDIX 6.5:

OPENING YEAR CUMULATIVE (2020) WITHOUT PROJECT CONDITIONS TRAFFIC SIGNAL WARRANT ANALYSIS WORKSHEETS

This Page Intentionally Left Blank

Figure 4C-4. Warrant 3, Peak Hour (70% Factor)

(COMMUNITY LESS THAN 10,000 POPULATION OR ABOVE 64 km/h OR ABOVE 40 mph ON MAJOR STREET)

Traffic Conditions = **2020 Without Project Conditions - Weekday PM Peak Hour**

Major Street Name = **Indian Street**

Total of Both Approaches (VPH) = **3093**
Number of Approach Lanes Major Street = **1**

Minor Street Name = **Grove View Road**

High Volume Approach (VPH) = **50**
Number of Approach Lanes Minor Street = **1**

SIGNAL WARRANT NOT SATISFIED

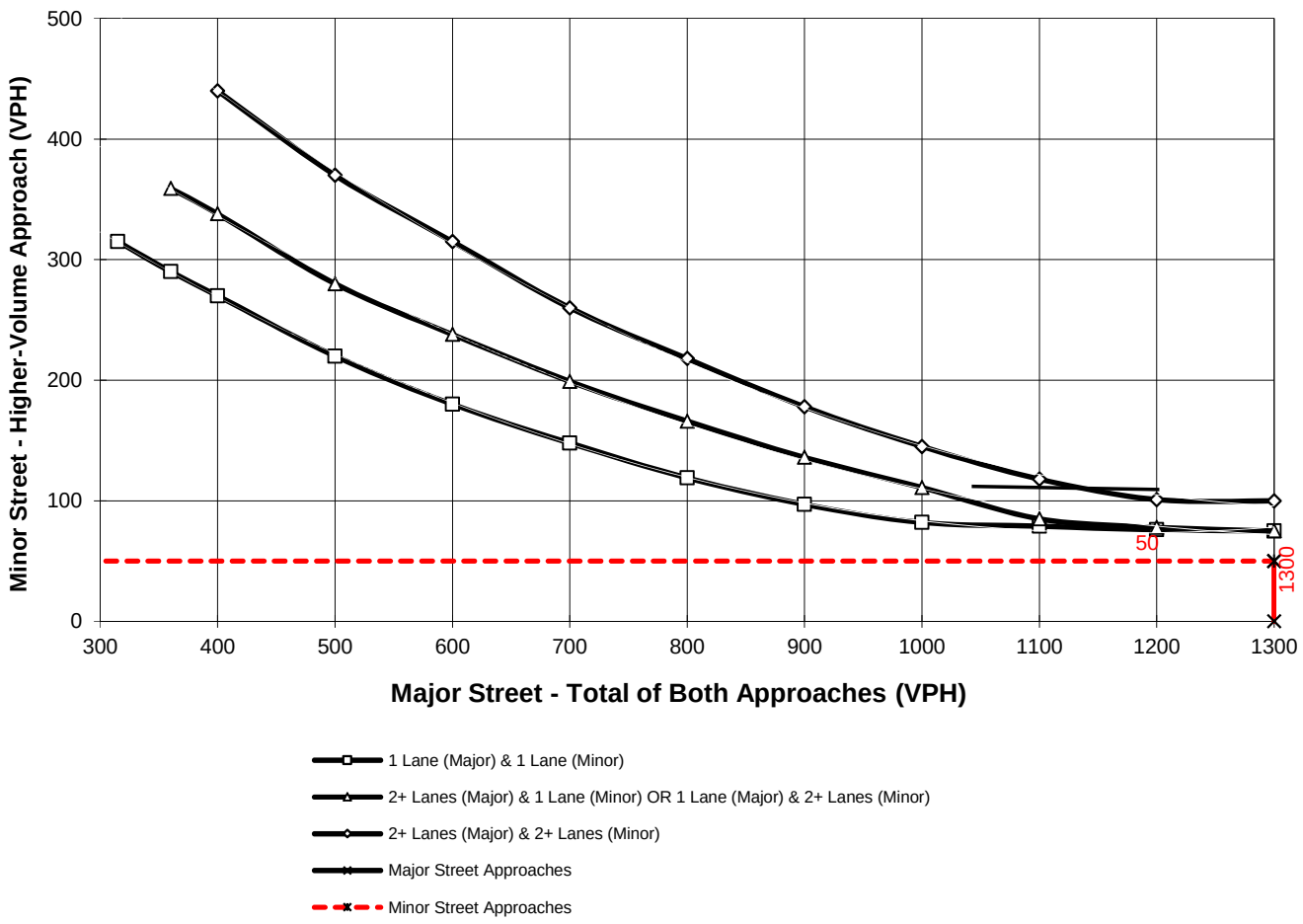

*Note: 100 vph applies as the lower threshold for a minor-street approach with two or more lanes and 75 vph applies as the lower threshold for a minor-street approach with one lane

This Page Intentionally Left Blank

APPENDIX 6.6:

OPENING YEAR CUMULATIVE (2020) WITH PROJECT CONDITIONS TRAFFIC SIGNAL WARRANT ANALYSIS WORKSHEETS

This Page Intentionally Left Blank

Figure 4C-4. Warrant 3, Peak Hour (70% Factor)

(COMMUNITY LESS THAN 10,000 POPULATION OR ABOVE 64 km/h OR ABOVE 40 mph ON MAJOR STREET)

Traffic Conditions = **2020 With Project Conditions - Weekday PM Peak Hour**

Major Street Name = **Indian Street**
Total of Both Approaches (VPH) = **3123**
Number of Approach Lanes Major Street = **1**

Minor Street Name = **Grove View Road**
High Volume Approach (VPH) = **55**
Number of Approach Lanes Minor Street = **1**

SIGNAL WARRANT NOT SATISFIED

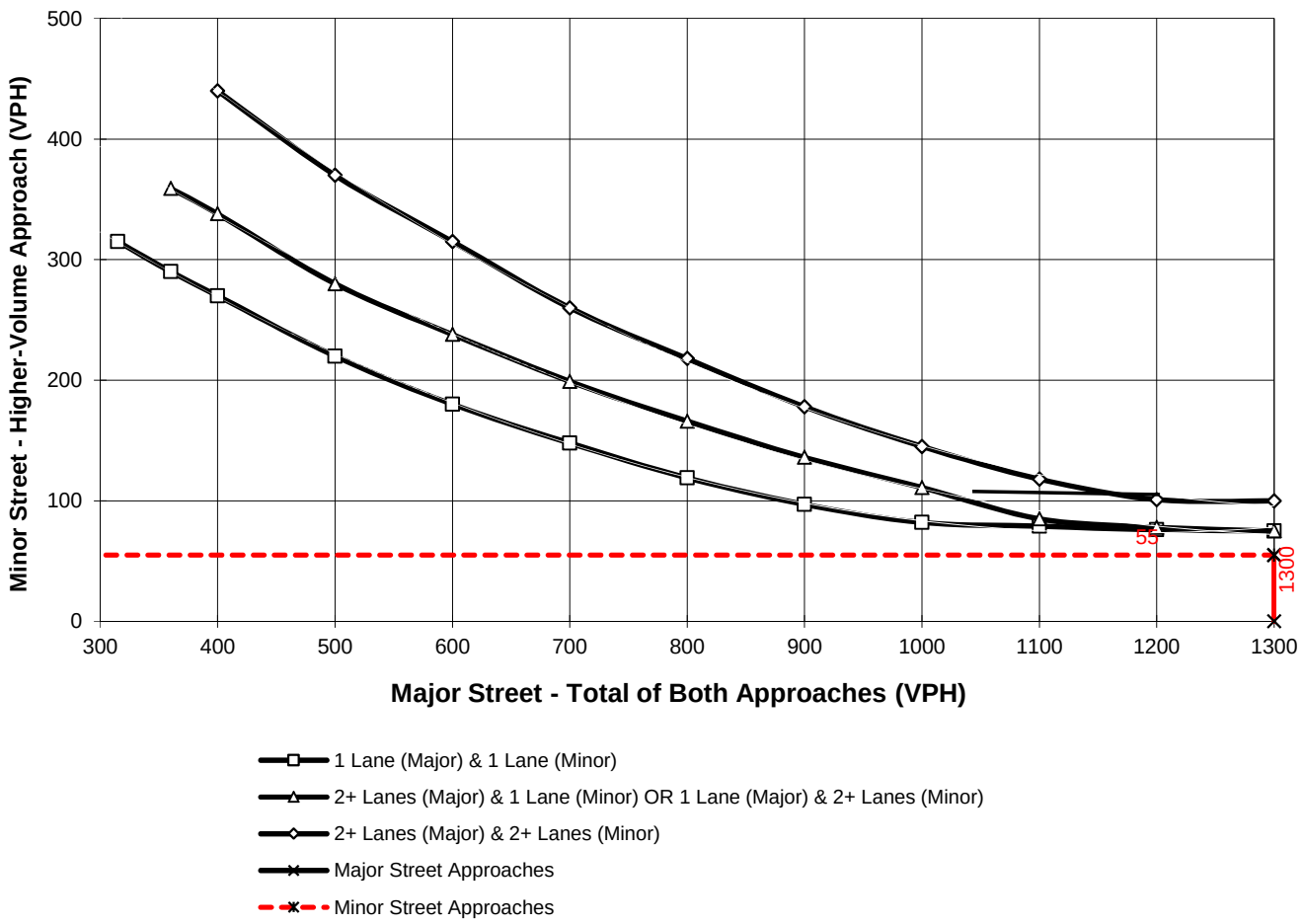

*Note: 100 vph applies as the lower threshold for a minor-street approach with two or more lanes and 75 vph applies as the lower threshold for a minor-street approach with one lane

Figure 4C-4. Warrant 3, Peak Hour (70% Factor)

(COMMUNITY LESS THAN 10,000 POPULATION OR ABOVE 64 km/h OR ABOVE 40 mph ON MAJOR STREET)

Traffic Conditions = **2020 WP Conditions - Weekday PM Peak Hour**

Major Street Name = **Indian Street**

Total of Both Approaches (VPH) = **3142**
Number of Approach Lanes Major Street = **1**

Minor Street Name = **Driveway 1**

High Volume Approach (VPH) = **46**
Number of Approach Lanes Minor Street = **1**

SIGNAL WARRANT NOT SATISFIED

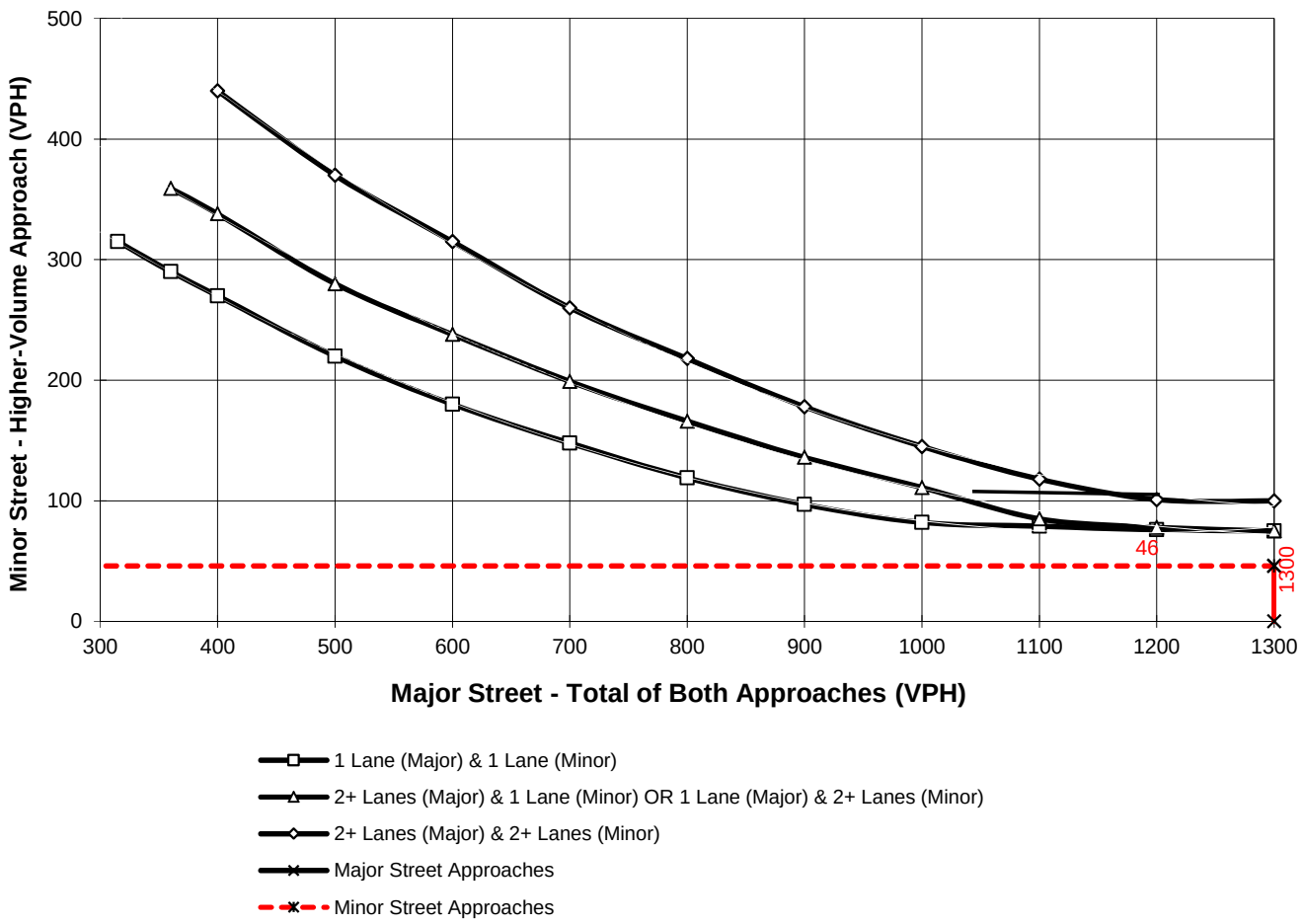

*Note: 100 vph applies as the lower threshold for a minor-street approach with two or more lanes and 75 vph applies as the lower threshold for a minor-street approach with one lane

Figure 4C-103 (CA). Traffic Signal Warrants Worksheet
(Average Traffic Estimate Form)

___	___	___	___		TRAFFIC CONDITIONS		**2020 WP**
DIST	CO	RTE	PM	CALC	BMB	DATE	01/06/16
Jurisdiction:	**City of Moreno Valley**			CHK	CHS	DATE	01/06/16
Major Street:	**Indian Street**				Critical Approach Speed (Major)		50 mph
Minor Street:	**Driveway 1**				Critical Approach Speed (Minor)		25 mph

Major Street Approach Lanes = **2** lane Minor Street Approach Lanes **1** lane

Major Street Future ADT = **24,552** vpd Minor Street Future ADT = **290** vpd

Speed limit or critical speed on major street traffic > 64 km/h (40 mph); ……... [√]

or **RURAL (R)**

In built up area of isolated community of < 10,000 population …….. [ ]

(Based on Estimated Average Daily Traffic - See Note)

URBAN	RURAL	Minimum Requirements EADT			
	XX				
CONDITION A - Minimum Vehicular Volume					
Satisfied	Not Satisfied	Vehicles Per Day on Major Street (Total of Both Approaches)		Vehicles Per Day on Higher-Volume Minor Street Approach (One Direction Only)	
	XX				
Number of lanes for moving traffic on each approach					
Major Street	Minor Street	Urban	Rural	Urban	Rural
1	*1*	8,000	5,600	2,400	1,680
2 + **24,552**	*1* **290**	9,600	6,720 *	2,400	1,680
2 +	*2 +*	9,600	6,720	3,200	2,240
1	*2 +*	8,000	5,600	3,200	2,240
CONDITION B - Interruption of Continuous Traffic					
Satisfied	Not Satisfied	Vehicles Per Day on Major Street (Total of Both Approaches)		Vehicles Per Day on Higher-Volume Minor Street Approach (One Direction Only)	
	XX				
Number of lanes for moving traffic on each approach					
Major Street	Minor Street	Urban	Rural	Urban	Rural
1	*1*	12,000	8,400	1,200	850
2 + **24,552**	*1* **290**	14,400	10,080 *	1,200	850
2 +	*2 +*	14,400	10,080	1,600	1,120
1	*2 +*	12,000	8,400	1,600	1,120
Combination of CONDITIONS A + B					
Satisfied	Not Satisfied	2 CONDITIONS 80%		2 CONDITIONS 80%	
	XX				
No one condition satisfied, but following conditions fulfilled 80% of more …..	**A** 17% **B** 34%				

Note: To be used only for NEW INTERSECTIONS or other locations where it is not reasonable to count actual traffic volumes.

The satisfaction of a traffic signal warrant or warrants shall not in itself require the installation of a traffic control signal.

Figure 4C-4. Warrant 3, Peak Hour (70% Factor)

(COMMUNITY LESS THAN 10,000 POPULATION OR ABOVE 64 km/h OR ABOVE 40 mph ON MAJOR STREET)

Traffic Conditions = **2020 WP Conditions - Weekday AM Peak Hour**

Major Street Name = **Indian Street**

Total of Both Approaches (VPH) = **2721**
Number of Approach Lanes Major Street = **1**

Minor Street Name = **Driveway 1**

High Volume Approach (VPH) = **64**
Number of Approach Lanes Minor Street = **1**

SIGNAL WARRANT NOT SATISFIED

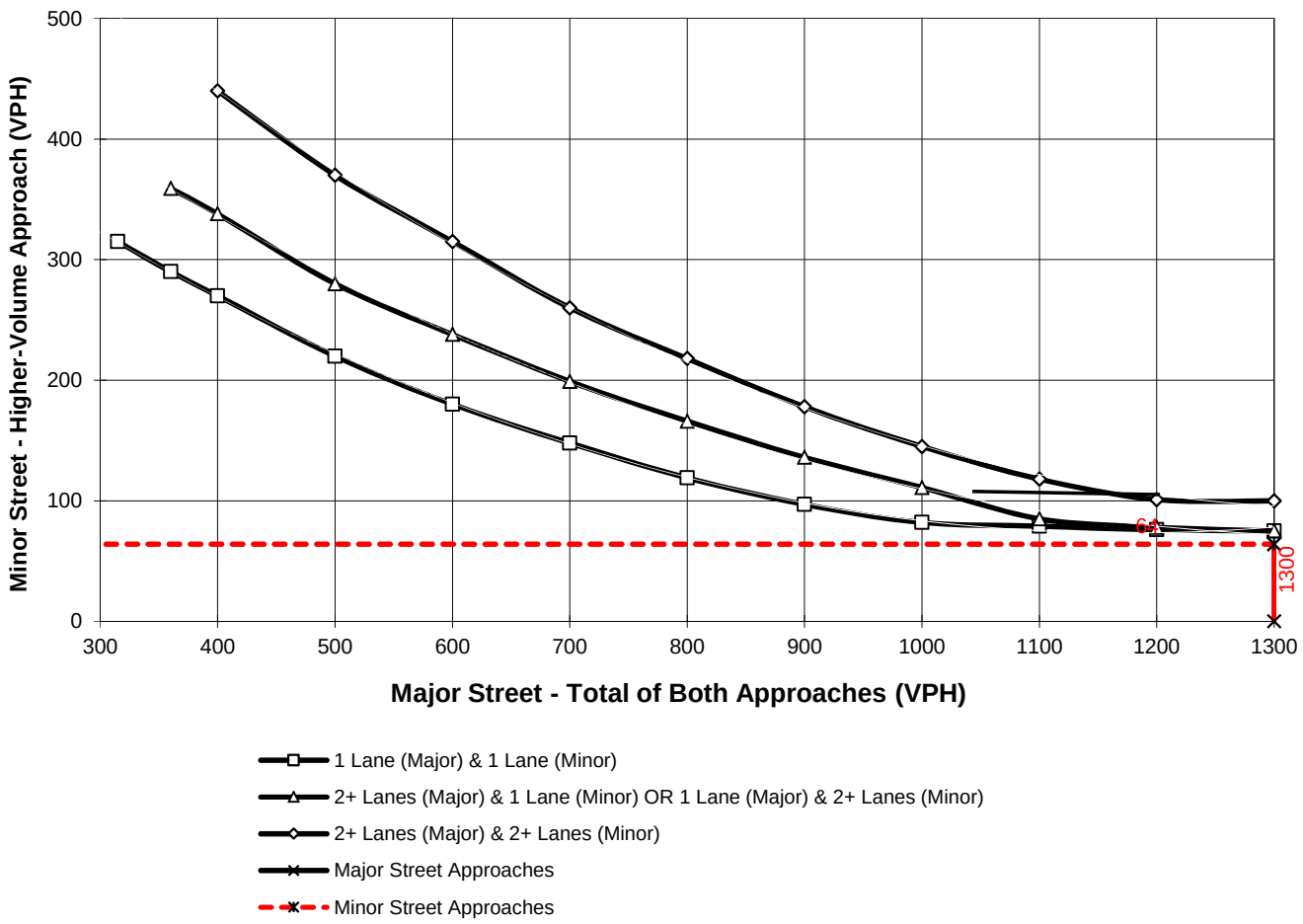

*Note: 100 vph applies as the lower threshold for a minor-street approach with two or more lanes and 75 vph applies as the lower threshold for a minor-street approach with one lane

Figure 4C-103 (CA). Traffic Signal Warrants Worksheet
(Average Traffic Estimate Form)

DIST	CO	RTE	PM

TRAFFIC CONDITIONS **2020 WP**

CALC BMB DATE 01/06/16

CHK CHS DATE 01/06/16

Jurisdiction: **City of Moreno Valley**

Major Street: **Indian Street**

Minor Street: **Driveway 2**

Critical Approach Speed (Major) 50 mph

Critical Approach Speed (Minor) 25 mph

Major Street Approach Lanes = **2** lane

Minor Street Approach Lanes **1** lane

Major Street Future ADT = **24,989** vpd

Minor Street Future ADT = **447** vpd

Speed limit or critical speed on major street traffic > 64 km/h (40 mph); ……... [√]

or

In built up area of isolated community of < 10,000 population …….. [ ]

RURAL (R)

(Based on Estimated Average Daily Traffic - See Note)

URBAN	RURAL	Minimum Requirements EADT			
	XX				
CONDITION A - Minimum Vehicular Volume					
Satisfied	Not Satisfied				
	XX				
Number of lanes for moving traffic on each approach		Vehicles Per Day on Major Street (Total of Both Approaches)		Vehicles Per Day on Higher-Volume Minor Street Approach (One Direction Only)	
Major Street	Minor Street	Urban	Rural	Urban	Rural
1	*1*	8,000	5,600	2,400	1,680
2 + **24,989**	*1* **447**	9,600	6,720 *	2,400	1,680
2 +	*2 +*	9,600	6,720	3,200	2,240
1	*2 +*	8,000	5,600	3,200	2,240
CONDITION B - Interruption of Continuous Traffic					
Satisfied	Not Satisfied				
	XX				
Number of lanes for moving traffic on each approach		Vehicles Per Day on Major Street (Total of Both Approaches)		Vehicles Per Day on Higher-Volume Minor Street Approach (One Direction Only)	
Major Street	Minor Street	Urban	Rural	Urban	Rural
1	*1*	12,000	8,400	1,200	850
2 + **24,989**	*1* **447**	14,400	10,080 *	1,200	850
2 +	*2 +*	14,400	10,080	1,600	1,120
1	*2 +*	12,000	8,400	1,600	1,120
Combination of CONDITIONS A + B					
Satisfied	Not Satisfied				
	XX	2 CONDITIONS 80%		2 CONDITIONS 80%	
No one condition satisfied, but following conditions fulfilled 80% of more …..	**A** 27% / **B** 53%				

Note: To be used only for NEW INTERSECTIONS or other locations where it is not reasonable to count actual traffic volumes.

The satisfaction of a traffic signal warrant or warrants shall not in itself require the installation of a traffic control signal.

URBAN CROSSROADS

This Page Intentionally Left Blank

APPENDIX 6.7:

OPENING YEAR CUMULATIVE (2020) WITHOUT PROJECT CONDITIONS INTERSECTION OPERATIONS ANALYSIS WORKSHEETS WITH IMPROVEMENTS

This Page Intentionally Left Blank

Movement	EBL	EBT	EBR	WBL	WBT	WBR	NBL	NBT	NBR	SBL	SBT	SBR
Lane Configurations												
Traffic Volume (veh/h)	0	717	44	306	335	0	0	0	0	1511	3	369
Future Volume (veh/h)	0	717	44	306	335	0	0	0	0	1511	3	369
Number	5	2	12	1	6	16				7	4	14
Initial Q (Qb), veh	0	0	0	0	0	0				0	0	0
Ped-Bike Adj(A_pbT)	1.00		1.00	1.00		1.00				1.00		1.00
Parking Bus, Adj	1.00	1.00	1.00	1.00	1.00	1.00				1.00	1.00	1.00
Adj Sat Flow, veh/h/ln	0	1900	1900	1900	1900	0				1900	1900	1900
Adj Flow Rate, veh/h	0	788	45	336	368	0				1660	3	340
Adj No. of Lanes	0	2	1	2	2	0				2	1	0
Peak Hour Factor	0.91	0.91	0.91	0.91	0.91	0.91				0.91	0.91	0.91
Percent Heavy Veh, %	0	0	0	0	0	0				0	0	0
Cap, veh/h	0	965	432	388	1499	0				1760	7	804
Arrive On Green	0.00	0.27	0.27	0.15	0.55	0.00				0.50	0.50	0.50
Sat Flow, veh/h	0	3705	1615	3510	3705	0				3510	14	1603
Grp Volume(v), veh/h	0	788	45	336	368	0				1660	0	343
Grp Sat Flow(s),veh/h/ln	0	1805	1615	1755	1805	0				1755	0	1617
Q Serve(g_s), s	0.0	24.5	2.5	11.2	6.3	0.0				53.7	0.0	16.1
Cycle Q Clear(g_c), s	0.0	24.5	2.5	11.2	6.3	0.0				53.7	0.0	16.1
Prop In Lane	0.00		1.00	1.00		0.00				1.00		0.99
Lane Grp Cap(c), veh/h	0	965	432	388	1499	0				1760	0	811
V/C Ratio(X)	0.00	0.82	0.10	0.87	0.25	0.00				0.94	0.00	0.42
Avail Cap(c_a), veh/h	0	965	432	395	1499	0				1814	0	836
HCM Platoon Ratio	1.00	1.00	1.00	1.33	1.33	1.00				1.00	1.00	1.00
Upstream Filter(I)	0.00	1.00	1.00	0.92	0.92	0.00				1.00	0.00	1.00
Uniform Delay (d), s/veh	0.0	41.2	33.1	50.3	17.1	0.0				28.3	0.0	18.9
Incr Delay (d2), s/veh	0.0	7.6	0.5	15.9	0.4	0.0				10.5	0.0	0.4
Initial Q Delay(d3),s/veh	0.0	0.0	0.0	0.0	0.0	0.0				0.0	0.0	0.0
%ile BackOfQ(50%),veh/ln	0.0	13.3	1.2	6.3	3.2	0.0				28.4	0.0	7.2
LnGrp Delay(d),s/veh	0.0	48.8	33.6	66.2	17.5	0.0				38.8	0.0	19.3
LnGrp LOS		D	C	E	B					D		B
Approach Vol, veh/h		833			704						2003	
Approach Delay, s/veh		48.0			40.8						35.4	
Approach LOS		D			D						D	

Timer	1	2	3	4	5	6	7	8
Assigned Phs	1	2		4		6		
Phs Duration (G+Y+Rc), s	17.8	37.1		65.2		54.8		
Change Period (Y+Rc), s	4.5	5.0		5.0		5.0		
Max Green Setting (Gmax), s	13.5	30.0		62.0		48.0		
Max Q Clear Time (g_c+I1), s	13.2	26.5		55.7		8.3		
Green Ext Time (p_c), s	0.0	1.7		4.5		5.3		

Intersection Summary	
HCM 2010 Ctrl Delay	39.4
HCM 2010 LOS	D

Movement	EBL	EBT	EBR	WBL	WBT	WBR	NBL	NBT	NBR	SBL	SBT	SBR
Lane Configurations												
Traffic Volume (veh/h)	438	1790	0	0	547	842	93	4	406	0	0	0
Future Volume (veh/h)	438	1790	0	0	547	842	93	4	406	0	0	0
Number	5	2	12	1	6	16	3	8	18			
Initial Q (Qb), veh	0	0	0	0	0	0	0	0	0			
Ped-Bike Adj(A_pbT)	1.00		1.00	1.00		1.00	1.00		1.00			
Parking Bus, Adj	1.00	1.00	1.00	1.00	1.00	1.00	1.00	1.00	1.00			
Adj Sat Flow, veh/h/ln	1900	1900	0	0	1900	1900	1900	1900	1900			
Adj Flow Rate, veh/h	503	2057	0	0	629	0	107	5	413			
Adj No. of Lanes	2	2	0	0	2	1	0	1	1			
Peak Hour Factor	0.87	0.87	0.87	0.87	0.87	0.87	0.87	0.87	0.87			
Percent Heavy Veh, %	0	0	0	0	0	0	0	0	0			
Cap, veh/h	567	2286	0	0	1598	715	491	23	458			
Arrive On Green	0.16	0.63	0.00	0.00	0.44	0.00	0.28	0.28	0.28			
Sat Flow, veh/h	3510	3705	0	0	3705	1615	1732	81	1615			
Grp Volume(v), veh/h	503	2057	0	0	629	0	112	0	413			
Grp Sat Flow(s),veh/h/ln	1755	1805	0	0	1805	1615	1813	0	1615			
Q Serve(g_s), s	16.8	58.3	0.0	0.0	14.1	0.0	5.7	0.0	29.5			
Cycle Q Clear(g_c), s	16.8	58.3	0.0	0.0	14.1	0.0	5.7	0.0	29.5			
Prop In Lane	1.00		0.00	0.00		1.00	0.96		1.00			
Lane Grp Cap(c), veh/h	567	2286	0	0	1598	715	514	0	458			
V/C Ratio(X)	0.89	0.90	0.00	0.00	0.39	0.00	0.22	0.00	0.90			
Avail Cap(c_a), veh/h	717	2286	0	0	1598	715	514	0	458			
HCM Platoon Ratio	1.00	1.00	1.00	1.00	1.00	1.00	1.00	1.00	1.00			
Upstream Filter(I)	0.31	0.31	0.00	0.00	0.63	0.00	1.00	0.00	1.00			
Uniform Delay (d), s/veh	49.2	18.8	0.0	0.0	22.6	0.0	32.8	0.0	41.4			
Incr Delay (d2), s/veh	3.3	2.1	0.0	0.0	0.5	0.0	1.0	0.0	23.7			
Initial Q Delay(d3),s/veh	0.0	0.0	0.0	0.0	0.0	0.0	0.0	0.0	0.0			
%ile BackOfQ(50%),veh/ln	8.4	29.2	0.0	0.0	7.1	0.0	3.0	0.0	16.2			
LnGrp Delay(d),s/veh	52.5	20.8	0.0	0.0	23.0	0.0	33.8	0.0	65.1			
LnGrp LOS	D	C			C		C		E			
Approach Vol, veh/h		2560			629			525				
Approach Delay, s/veh		27.1			23.0			58.4				
Approach LOS		C			C			E				

Timer	1	2	3	4	5	6	7	8
Assigned Phs		2			5	6		8
Phs Duration (G+Y+Rc), s		81.0			22.9	58.1		39.0
Change Period (Y+Rc), s		5.0			3.5	5.0		5.0
Max Green Setting (Gmax), s		76.0			24.5	48.0		34.0
Max Q Clear Time (g_c+I1), s		60.3			18.8	16.1		31.5
Green Ext Time (p_c), s		11.6			0.6	18.7		0.6

Intersection Summary	
HCM 2010 Ctrl Delay	30.8
HCM 2010 LOS	C

Movement	EBL	EBT	WBT	WBR	SBL	SBR
Lane Configurations						
Traffic Volume (veh/h)	75	2122	1315	29	2	75
Future Volume (veh/h)	75	2122	1315	29	2	75
Number	5	2	6	16	7	14
Initial Q (Qb), veh	0	0	0	0	0	0
Ped-Bike Adj(A_pbT)	1.00			1.00	1.00	1.00
Parking Bus, Adj	1.00	1.00	1.00	1.00	1.00	1.00
Adj Sat Flow, veh/h/ln	1900	1900	1900	1900	1900	1900
Adj Flow Rate, veh/h	91	2588	1604	35	2	91
Adj No. of Lanes	1	2	2	1	0	0
Peak Hour Factor	0.82	0.82	0.82	0.82	0.82	0.82
Percent Heavy Veh, %	0	0	0	0	0	0
Cap, veh/h	116	2657	2273	1017	6	251
Arrive On Green	0.06	0.74	0.63	0.63	0.16	0.16
Sat Flow, veh/h	1810	3705	3705	1615	34	1570
Grp Volume(v), veh/h	91	2588	1604	35	94	0
Grp Sat Flow(s),veh/h/ln	1810	1805	1805	1615	1621	0
Q Serve(g_s), s	5.0	66.9	29.6	0.8	5.2	0.0
Cycle Q Clear(g_c), s	5.0	66.9	29.6	0.8	5.2	0.0
Prop In Lane	1.00			1.00	0.02	0.97
Lane Grp Cap(c), veh/h	116	2657	2273	1017	259	0
V/C Ratio(X)	0.78	0.97	0.71	0.03	0.36	0.00
Avail Cap(c_a), veh/h	208	2657	2273	1017	259	0
HCM Platoon Ratio	1.00	1.00	1.00	1.00	1.00	1.00
Upstream Filter(I)	0.30	0.30	1.00	1.00	1.00	0.00
Uniform Delay (d), s/veh	46.1	12.3	12.3	7.0	37.5	0.0
Incr Delay (d2), s/veh	1.3	5.2	1.9	0.1	3.9	0.0
Initial Q Delay(d3),s/veh	0.0	0.0	0.0	0.0	0.0	0.0
%ile BackOfQ(50%),veh/ln	2.5	34.3	15.1	0.4	2.6	0.0
LnGrp Delay(d),s/veh	47.4	17.5	14.2	7.1	41.3	0.0
LnGrp LOS	D	B	B	A	D	
Approach Vol, veh/h		2679	1639		94	
Approach Delay, s/veh		18.5	14.1		41.3	
Approach LOS		B	B		D	

Timer	1	2	3	4	5	6	7	8
Assigned Phs		2		4	5	6		
Phs Duration (G+Y+Rc), s		79.4		20.6	10.6	68.8		
Change Period (Y+Rc), s		5.8		4.6	* 4.2	5.8		
Max Green Setting (Gmax), s		73.6		16.0	* 12	57.9		
Max Q Clear Time (g_c+I1), s		68.9		7.2	7.0	31.6		
Green Ext Time (p_c), s		4.6		0.1	0.0	24.1		

Intersection Summary	
HCM 2010 Ctrl Delay	17.4
HCM 2010 LOS	B

Notes

Movement	EBL	EBT	EBR	WBL	WBT	WBR	NBL	NBT	NBR	SBL	SBT	SBR
Lane Configurations												
Traffic Volume (veh/h)	87	1953	12	12	1190	15	99	2	37	3	4	20
Future Volume (veh/h)	87	1953	12	12	1190	15	99	2	37	3	4	20
Number	5	2	12	1	6	16	3	8	18	7	4	14
Initial Q (Qb), veh	0	0	0	0	0	0	0	0	0	0	0	0
Ped-Bike Adj(A_pbT)	1.00		1.00	1.00		1.00	1.00		1.00	1.00		1.00
Parking Bus, Adj	1.00	1.00	1.00	1.00	1.00	1.00	1.00	1.00	1.00	1.00	1.00	1.00
Adj Sat Flow, veh/h/ln	1900	1900	1900	1900	1900	1900	1900	1900	1900	1900	1900	1900
Adj Flow Rate, veh/h	106	2382	13	15	1451	18	121	2	40	4	5	22
Adj No. of Lanes	1	3	1	1	3	1	0	1	0	0	1	1
Peak Hour Factor	0.82	0.82	0.82	0.82	0.82	0.82	0.82	0.82	0.82	0.82	0.82	0.82
Percent Heavy Veh, %	0	0	0	0	0	0	0	0	0	0	0	0
Cap, veh/h	131	2936	914	30	2646	824	361	13	105	241	287	471
Arrive On Green	0.07	0.57	0.57	0.02	0.51	0.51	0.29	0.29	0.29	0.29	0.29	0.29
Sat Flow, veh/h	1810	5187	1615	1810	5187	1615	1060	45	359	679	985	1615
Grp Volume(v), veh/h	106	2382	13	15	1451	18	163	0	0	9	0	22
Grp Sat Flow(s),veh/h/ln	1810	1729	1615	1810	1729	1615	1464	0	0	1664	0	1615
Q Serve(g_s), s	6.9	44.2	0.4	1.0	22.8	0.7	9.8	0.0	0.0	0.0	0.0	1.2
Cycle Q Clear(g_c), s	6.9	44.2	0.4	1.0	22.8	0.7	10.5	0.0	0.0	0.4	0.0	1.2
Prop In Lane	1.00		1.00	1.00		1.00	0.74		0.25	0.44		1.00
Lane Grp Cap(c), veh/h	131	2936	914	30	2646	824	479	0	0	529	0	471
V/C Ratio(X)	0.81	0.81	0.01	0.51	0.55	0.02	0.34	0.00	0.00	0.02	0.00	0.05
Avail Cap(c_a), veh/h	157	2936	914	75	2646	824	479	0	0	529	0	471
HCM Platoon Ratio	1.00	1.00	1.00	1.00	1.00	1.00	1.00	1.00	1.00	1.00	1.00	1.00
Upstream Filter(I)	1.00	1.00	1.00	1.00	1.00	1.00	1.00	0.00	0.00	1.00	0.00	1.00
Uniform Delay (d), s/veh	54.8	20.9	11.4	58.5	20.0	14.6	33.8	0.0	0.0	30.2	0.0	30.5
Incr Delay (d2), s/veh	19.3	2.6	0.0	4.9	0.8	0.0	1.9	0.0	0.0	0.1	0.0	0.2
Initial Q Delay(d3),s/veh	0.0	0.0	0.0	0.0	0.0	0.0	0.0	0.0	0.0	0.0	0.0	0.0
%ile BackOfQ(50%),veh/ln	4.2	21.6	0.2	0.5	11.1	0.3	4.6	0.0	0.0	0.2	0.0	0.6
LnGrp Delay(d),s/veh	74.1	23.4	11.4	63.4	20.8	14.6	35.7	0.0	0.0	30.3	0.0	30.7
LnGrp LOS	E	C	B	E	C	B	D			C		C
Approach Vol, veh/h		2501			1484			163			31	
Approach Delay, s/veh		25.5			21.2			35.7			30.6	
Approach LOS		C			C			D			C	

Timer	1	2	3	4	5	6	7	8
Assigned Phs	1	2		4	5	6		8
Phs Duration (G+Y+Rc), s	6.2	73.7		40.1	12.9	67.0		40.1
Change Period (Y+Rc), s	* 4.2	5.8		5.1	* 4.2	5.8		5.1
Max Green Setting (Gmax), s	* 5	64.9		35.0	* 10	59.5		35.0
Max Q Clear Time (g_c+I1), s	3.0	46.2		3.2	8.9	24.8		12.5
Green Ext Time (p_c), s	0.0	16.6		0.7	0.0	28.2		0.6

Intersection Summary	
HCM 2010 Ctrl Delay	24.4
HCM 2010 LOS	C

Notes

Movement	WBL	WBR	NBT	NBR	SBL	SBT
Lane Configurations						
Traffic Volume (veh/h)	16	6	1846	33	1	722
Future Volume (veh/h)	16	6	1846	33	1	722
Number	3	18	2	12	1	6
Initial Q (Qb), veh	0	0	0	0	0	0
Ped-Bike Adj(A_pbT)	1.00	1.00		1.00	1.00	
Parking Bus, Adj	1.00	1.00	1.00	1.00	1.00	1.00
Adj Sat Flow, veh/h/ln	1900	1900	1900	1900	1900	1900
Adj Flow Rate, veh/h	19	7	2198	39	1	860
Adj No. of Lanes	1	1	2	0	1	2
Peak Hour Factor	0.84	0.84	0.84	0.84	0.84	0.84
Percent Heavy Veh, %	0	0	0	0	0	0
Cap, veh/h	96	86	2827	50	2	2985
Arrive On Green	0.05	0.05	0.78	0.78	0.00	0.83
Sat Flow, veh/h	1810	1615	3724	64	1810	3705
Grp Volume(v), veh/h	19	7	1090	1147	1	860
Grp Sat Flow(s),veh/h/ln	1810	1615	1805	1889	1810	1805
Q Serve(g_s), s	0.9	0.4	30.3	30.8	0.0	4.9
Cycle Q Clear(g_c), s	0.9	0.4	30.3	30.8	0.0	4.9
Prop In Lane	1.00	1.00		0.03	1.00	
Lane Grp Cap(c), veh/h	96	86	1406	1471	2	2985
V/C Ratio(X)	0.20	0.08	0.78	0.78	0.40	0.29
Avail Cap(c_a), veh/h	205	183	1406	1471	103	2985
HCM Platoon Ratio	1.00	1.00	1.00	1.00	1.00	1.00
Upstream Filter(I)	1.00	1.00	1.00	1.00	0.93	0.93
Uniform Delay (d), s/veh	40.8	40.5	5.6	5.6	44.9	1.8
Incr Delay (d2), s/veh	0.4	0.1	4.2	4.2	32.4	0.2
Initial Q Delay(d3),s/veh	0.0	0.0	0.0	0.0	0.0	0.0
%ile BackOfQ(50%),veh/ln	0.5	0.2	16.2	17.3	0.0	2.5
LnGrp Delay(d),s/veh	41.1	40.7	9.8	9.8	77.3	2.0
LnGrp LOS	D	D	A	A	E	A
Approach Vol, veh/h	26		2237			861
Approach Delay, s/veh	41.0		9.8			2.1
Approach LOS	D		A			A

Timer	1	2	3	4	5	6	7	8
Assigned Phs	1	2				6		8
Phs Duration (G+Y+Rc), s	4.3	76.3				80.6		9.4
Change Period (Y+Rc), s	* 4.2	6.2				6.2		4.6
Max Green Setting (Gmax), s	* 5.1	59.7				69.0		10.2
Max Q Clear Time (g_c+I1), s	2.0	32.8				6.9		2.9
Green Ext Time (p_c), s	0.0	18.4				29.1		0.0

Intersection Summary	
HCM 2010 Ctrl Delay	7.9
HCM 2010 LOS	A

Notes

Movement	EBL	EBT	EBR	WBL	WBT	WBR	NBL	NBT	NBR	SBL	SBT	SBR
Lane Configurations												
Traffic Volume (veh/h)	942	877	148	22	609	47	114	222	21	11	80	451
Future Volume (veh/h)	942	877	148	22	609	47	114	222	21	11	80	451
Number	5	2	12	1	6	16	3	8	18	7	4	14
Initial Q (Qb), veh	0	0	0	0	0	0	0	0	0	0	0	0
Ped-Bike Adj(A_pbT)	1.00		1.00	1.00		0.99	1.00		1.00	1.00		1.00
Parking Bus, Adj	1.00	1.00	1.00	1.00	1.00	1.00	1.00	1.00	1.00	1.00	1.00	1.00
Adj Sat Flow, veh/h/ln	1900	1900	1900	1900	1900	1900	1900	1900	1900	1900	1900	1900
Adj Flow Rate, veh/h	1024	953	153	24	662	44	124	241	9	12	87	458
Adj No. of Lanes	2	3	1	1	3	0	2	2	1	1	2	1
Peak Hour Factor	0.92	0.92	0.92	0.92	0.92	0.92	0.92	0.92	0.92	0.92	0.92	0.92
Percent Heavy Veh, %	0	0	0	0	0	0	0	0	0	0	0	0
Cap, veh/h	2130	4706	1465	42	1540	102	146	1124	503	25	1023	1438
Arrive On Green	0.61	0.91	0.91	0.02	0.31	0.31	0.04	0.31	0.31	0.01	0.28	0.28
Sat Flow, veh/h	3510	5187	1615	1810	4967	328	3510	3610	1615	1810	3610	1615
Grp Volume(v), veh/h	1024	953	153	24	460	246	124	241	9	12	87	458
Grp Sat Flow(s),veh/h/ln	1755	1729	1615	1810	1729	1837	1755	1805	1615	1810	1805	1615
Q Serve(g_s), s	19.4	2.5	1.2	1.6	12.7	12.8	4.2	5.9	0.5	0.8	2.1	3.6
Cycle Q Clear(g_c), s	19.4	2.5	1.2	1.6	12.7	12.8	4.2	5.9	0.5	0.8	2.1	3.6
Prop In Lane	1.00		1.00	1.00		0.18	1.00		1.00	1.00		1.00
Lane Grp Cap(c), veh/h	2130	4706	1465	42	1072	570	146	1124	503	25	1023	1438
V/C Ratio(X)	0.48	0.20	0.10	0.58	0.43	0.43	0.85	0.21	0.02	0.48	0.09	0.32
Avail Cap(c_a), veh/h	2130	4706	1465	87	1072	570	146	1124	503	75	1023	1438
HCM Platoon Ratio	1.00	1.00	1.00	1.00	1.00	1.00	1.00	1.00	1.00	1.00	1.00	1.00
Upstream Filter(I)	1.00	1.00	1.00	1.00	1.00	1.00	1.00	1.00	1.00	1.00	1.00	1.00
Uniform Delay (d), s/veh	13.1	0.6	0.6	58.0	32.9	33.0	57.1	30.5	28.6	58.8	31.6	11.2
Incr Delay (d2), s/veh	0.1	0.1	0.1	4.7	1.3	2.4	33.2	0.4	0.1	5.3	0.2	0.6
Initial Q Delay(d3),s/veh	0.0	0.0	0.0	0.0	0.0	0.0	0.0	0.0	0.0	0.0	0.0	0.0
%ile BackOfQ(50%),veh/ln	9.4	1.2	0.6	0.8	6.3	6.9	2.7	3.0	0.2	0.4	1.1	7.7
LnGrp Delay(d),s/veh	13.2	0.7	0.7	62.7	34.2	35.4	90.3	30.9	28.7	64.1	31.7	11.8
LnGrp LOS	B	A	A	E	C	D	F	C	C	E	C	B
Approach Vol, veh/h		2130			730			374			557	
Approach Delay, s/veh		6.7			35.5			50.6			16.1	
Approach LOS		A			D			D			B	

Timer	1	2	3	4	5	6	7	8
Assigned Phs	1	2	3	4	5	6	7	8
Phs Duration (G+Y+Rc), s	7.0	115.0	9.2	40.2	78.9	43.0	5.8	43.6
Change Period (Y+Rc), s	* 4.2	5.8	* 4.2	6.2	5.8	* 5.8	* 4.2	* 6.2
Max Green Setting (Gmax), s	* 5.8	54.8	* 5	34.0	23.4	* 37	* 5	* 35
Max Q Clear Time (g_c+I1), s	3.6	4.5	6.2	5.6	21.4	14.8	2.8	7.9
Green Ext Time (p_c), s	0.0	8.0	0.0	2.0	0.7	2.6	0.0	2.0

Intersection Summary	
HCM 2010 Ctrl Delay	18.0
HCM 2010 LOS	B

Notes

Movement	EBL	EBT	EBR	WBL	WBT	WBR	NBL	NBT	NBR	SBL	SBT	SBR
Lane Configurations												
Traffic Volume (veh/h)	0	713	132	684	203	0	0	0	0	839	3	313
Future Volume (veh/h)	0	713	132	684	203	0	0	0	0	839	3	313
Number	5	2	12	1	6	16				7	4	14
Initial Q (Qb), veh	0	0	0	0	0	0				0	0	0
Ped-Bike Adj(A_pbT)	1.00		1.00	1.00		1.00				1.00		1.00
Parking Bus, Adj	1.00	1.00	1.00	1.00	1.00	1.00				1.00	1.00	1.00
Adj Sat Flow, veh/h/ln	0	1900	1900	1900	1900	0				1900	1900	1900
Adj Flow Rate, veh/h	0	810	140	777	231	0				953	3	283
Adj No. of Lanes	0	2	1	2	2	0				2	1	0
Peak Hour Factor	0.88	0.88	0.88	0.88	0.88	0.88				0.88	0.88	0.88
Percent Heavy Veh, %	0	0	0	0	0	0				0	0	0
Cap, veh/h	0	1212	542	853	2225	0				1055	5	481
Arrive On Green	0.00	0.34	0.34	0.08	0.20	0.00				0.30	0.30	0.30
Sat Flow, veh/h	0	3705	1615	3510	3705	0				3510	17	1601
Grp Volume(v), veh/h	0	810	140	777	231	0				953	0	286
Grp Sat Flow(s),veh/h/ln	0	1805	1615	1755	1805	0				1755	0	1618
Q Serve(g_s), s	0.0	23.1	7.6	26.4	6.2	0.0				31.3	0.0	18.0
Cycle Q Clear(g_c), s	0.0	23.1	7.6	26.4	6.2	0.0				31.3	0.0	18.0
Prop In Lane	0.00		1.00	1.00		0.00				1.00		0.99
Lane Grp Cap(c), veh/h	0	1212	542	853	2225	0				1055	0	486
V/C Ratio(X)	0.00	0.67	0.26	0.91	0.10	0.00				0.90	0.00	0.59
Avail Cap(c_a), veh/h	0	1212	542	951	2225	0				1141	0	526
HCM Platoon Ratio	1.00	1.00	1.00	0.33	0.33	1.00				1.00	1.00	1.00
Upstream Filter(I)	0.00	1.00	1.00	0.66	0.66	0.00				1.00	0.00	1.00
Uniform Delay (d), s/veh	0.0	34.1	29.0	53.9	20.8	0.0				40.3	0.0	35.7
Incr Delay (d2), s/veh	0.0	2.9	1.2	8.0	0.1	0.0				9.7	0.0	1.5
Initial Q Delay(d3),s/veh	0.0	0.0	0.0	0.0	0.0	0.0				0.0	0.0	0.0
%ile BackOfQ(50%),veh/ln	0.0	12.0	3.6	13.8	3.2	0.0				16.5	0.0	8.2
LnGrp Delay(d),s/veh	0.0	37.1	30.1	61.9	20.9	0.0				50.0	0.0	37.2
LnGrp LOS		D	C	E	C					D		D
Approach Vol, veh/h		950			1008						1239	
Approach Delay, s/veh		36.0			52.5						47.0	
Approach LOS		D			D						D	

Timer	1	2	3	4	5	6	7	8
Assigned Phs	1	2		4		6		
Phs Duration (G+Y+Rc), s	33.6	45.3		41.1		78.9		
Change Period (Y+Rc), s	4.5	5.0		5.0		5.0		
Max Green Setting (Gmax), s	32.5	34.0		39.0		71.0		
Max Q Clear Time (g_c+I1), s	28.4	25.1		33.3		8.2		
Green Ext Time (p_c), s	0.8	3.2		2.8		4.9		

Intersection Summary	
HCM 2010 Ctrl Delay	45.5
HCM 2010 LOS	D

Movement	EBL	EBT	EBR	WBL	WBT	WBR	NBL	NBT	NBR	SBL	SBT	SBR
Lane Configurations												
Traffic Volume (veh/h)	509	1042	0	0	837	1643	51	0	294	0	0	0
Future Volume (veh/h)	509	1042	0	0	837	1643	51	0	294	0	0	0
Number	5	2	12	1	6	16	3	8	18			
Initial Q (Qb), veh	0	0	0	0	0	0	0	0	0			
Ped-Bike Adj(A_pbT)	1.00		1.00	1.00		1.00	1.00		1.00			
Parking Bus, Adj	1.00	1.00	1.00	1.00	1.00	1.00	1.00	1.00	1.00			
Adj Sat Flow, veh/h/ln	1900	1900	0	0	1900	1900	1900	1900	1900			
Adj Flow Rate, veh/h	606	1240	0	0	996	0	61	0	182			
Adj No. of Lanes	2	2	0	0	2	1	0	1	1			
Peak Hour Factor	0.84	0.84	0.84	0.84	0.84	0.84	0.84	0.84	0.84			
Percent Heavy Veh, %	0	0	0	0	0	0	0	0	0			
Cap, veh/h	659	2286	0	0	1503	672	513	0	458			
Arrive On Green	0.38	1.00	0.00	0.00	0.42	0.00	0.28	0.00	0.28			
Sat Flow, veh/h	3510	3705	0	0	3705	1615	1810	0	1615			
Grp Volume(v), veh/h	606	1240	0	0	996	0	61	0	182			
Grp Sat Flow(s),veh/h/ln	1755	1805	0	0	1805	1615	1810	0	1615			
Q Serve(g_s), s	19.8	0.0	0.0	0.0	26.7	0.0	3.0	0.0	10.9			
Cycle Q Clear(g_c), s	19.8	0.0	0.0	0.0	26.7	0.0	3.0	0.0	10.9			
Prop In Lane	1.00		0.00	0.00		1.00	1.00		1.00			
Lane Grp Cap(c), veh/h	659	2286	0	0	1503	672	513	0	458			
V/C Ratio(X)	0.92	0.54	0.00	0.00	0.66	0.00	0.12	0.00	0.40			
Avail Cap(c_a), veh/h	834	2286	0	0	1503	672	513	0	458			
HCM Platoon Ratio	2.00	2.00	1.00	1.00	1.00	1.00	1.00	1.00	1.00			
Upstream Filter(I)	0.51	0.51	0.00	0.00	0.09	0.00	1.00	0.00	1.00			
Uniform Delay (d), s/veh	36.6	0.0	0.0	0.0	28.2	0.0	31.9	0.0	34.7			
Incr Delay (d2), s/veh	6.7	0.5	0.0	0.0	0.2	0.0	0.5	0.0	2.6			
Initial Q Delay(d3),s/veh	0.0	0.0	0.0	0.0	0.0	0.0	0.0	0.0	0.0			
%ile BackOfQ(50%),veh/ln	10.0	0.2	0.0	0.0	13.3	0.0	1.6	0.0	5.2			
LnGrp Delay(d),s/veh	43.3	0.5	0.0	0.0	28.4	0.0	32.4	0.0	37.3			
LnGrp LOS	D	A			C		C		D			
Approach Vol, veh/h		1846			996			243				
Approach Delay, s/veh		14.5			28.4			36.1				
Approach LOS		B			C			D				

Timer	1	2	3	4	5	6	7	8
Assigned Phs		2			5	6		8
Phs Duration (G+Y+Rc), s		81.0			26.0	55.0		39.0
Change Period (Y+Rc), s		5.0			3.5	5.0		5.0
Max Green Setting (Gmax), s		76.0			28.5	44.0		34.0
Max Q Clear Time (g_c+I1), s		2.0			21.8	28.7		12.9
Green Ext Time (p_c), s		15.7			0.8	9.1		0.8

Intersection Summary	
HCM 2010 Ctrl Delay	20.7
HCM 2010 LOS	C

Movement	EBL	EBT	WBT	WBR	SBL	SBR
Lane Configurations						
Traffic Volume (veh/h)	22	1314	2386	7	15	93
Future Volume (veh/h)	22	1314	2386	7	15	93
Number	5	2	6	16	7	14
Initial Q (Qb), veh	0	0	0	0	0	0
Ped-Bike Adj(A_pbT)	1.00			1.00	1.00	1.00
Parking Bus, Adj	1.00	1.00	1.00	1.00	1.00	1.00
Adj Sat Flow, veh/h/ln	1900	1900	1900	1900	1900	1900
Adj Flow Rate, veh/h	25	1493	2711	8	17	106
Adj No. of Lanes	1	2	2	1	0	0
Peak Hour Factor	0.88	0.88	0.88	0.88	0.88	0.88
Percent Heavy Veh, %	0	0	0	0	0	0
Cap, veh/h	43	2816	2604	1165	30	187
Arrive On Green	0.02	0.52	0.72	0.72	0.13	0.13
Sat Flow, veh/h	1810	3705	3705	1615	225	1403
Grp Volume(v), veh/h	25	1493	2711	8	124	0
Grp Sat Flow(s),veh/h/ln	1810	1805	1805	1615	1641	0
Q Serve(g_s), s	1.6	32.8	86.6	0.2	8.5	0.0
Cycle Q Clear(g_c), s	1.6	32.8	86.6	0.2	8.5	0.0
Prop In Lane	1.00			1.00	0.14	0.85
Lane Grp Cap(c), veh/h	43	2816	2604	1165	219	0
V/C Ratio(X)	0.59	0.53	1.04	0.01	0.57	0.00
Avail Cap(c_a), veh/h	75	2816	2604	1165	219	0
HCM Platoon Ratio	0.67	0.67	1.00	1.00	1.00	1.00
Upstream Filter(I)	0.80	0.80	1.00	1.00	1.00	0.00
Uniform Delay (d), s/veh	58.5	14.1	16.7	4.7	48.8	0.0
Incr Delay (d2), s/veh	3.7	0.6	29.4	0.0	10.2	0.0
Initial Q Delay(d3),s/veh	0.0	0.0	0.0	0.0	0.0	0.0
%ile BackOfQ(50%),veh/ln	0.9	16.5	53.0	0.1	4.5	0.0
LnGrp Delay(d),s/veh	62.2	14.7	46.1	4.7	59.0	0.0
LnGrp LOS	E	B	F	A	E	
Approach Vol, veh/h		1518	2719		124	
Approach Delay, s/veh		15.5	46.0		59.0	
Approach LOS		B	D		E	

Timer	1	2	3	4	5	6	7	8
Assigned Phs		2		4	5	6		
Phs Duration (G+Y+Rc), s		99.4		20.6	7.0	92.4		
Change Period (Y+Rc), s		5.8		4.6	* 4.2	5.8		
Max Green Setting (Gmax), s		93.6		16.0	* 5	84.4		
Max Q Clear Time (g_c+I1), s		34.8		10.5	3.6	88.6		
Green Ext Time (p_c), s		49.4		0.1	0.0	0.0		

Intersection Summary	
HCM 2010 Ctrl Delay	35.8
HCM 2010 LOS	D

Notes

Movement	EBL	EBT	EBR	WBL	WBT	WBR	NBL	NBT	NBR	SBL	SBT	SBR
Lane Configurations												
Traffic Volume (veh/h)	20	1249	26	39	2198	3	71	4	20	7	2	94
Future Volume (veh/h)	20	1249	26	39	2198	3	71	4	20	7	2	94
Number	5	2	12	1	6	16	3	8	18	7	4	14
Initial Q (Qb), veh	0	0	0	0	0	0	0	0	0	0	0	0
Ped-Bike Adj(A_pbT)	1.00		1.00	1.00		1.00	1.00		1.00	1.00		1.00
Parking Bus, Adj	1.00	1.00	1.00	1.00	1.00	1.00	1.00	1.00	1.00	1.00	1.00	1.00
Adj Sat Flow, veh/h/ln	1900	1900	1900	1900	1900	1900	1900	1900	1900	1900	1900	1900
Adj Flow Rate, veh/h	24	1469	31	46	2586	3	84	5	19	8	2	104
Adj No. of Lanes	1	3	1	1	3	1	0	1	0	0	1	1
Peak Hour Factor	0.85	0.85	0.85	0.85	0.85	0.85	0.85	0.85	0.85	0.85	0.85	0.85
Percent Heavy Veh, %	0	0	0	0	0	0	0	0	0	0	0	0
Cap, veh/h	42	2697	840	142	3056	952	376	27	74	420	99	492
Arrive On Green	0.02	0.52	0.52	0.08	0.59	0.59	0.30	0.30	0.30	0.30	0.30	0.30
Sat Flow, veh/h	1810	5187	1615	1810	5187	1615	1051	87	243	1195	326	1615
Grp Volume(v), veh/h	24	1469	31	46	2586	3	108	0	0	10	0	104
Grp Sat Flow(s),veh/h/ln	1810	1729	1615	1810	1729	1615	1382	0	0	1521	0	1615
Q Serve(g_s), s	1.5	21.8	1.1	2.8	47.0	0.1	6.0	0.0	0.0	0.0	0.0	5.5
Cycle Q Clear(g_c), s	1.5	21.8	1.1	2.8	47.0	0.1	6.6	0.0	0.0	0.4	0.0	5.5
Prop In Lane	1.00		1.00	1.00		1.00	0.78		0.18	0.80		1.00
Lane Grp Cap(c), veh/h	42	2697	840	142	3056	952	476	0	0	519	0	492
V/C Ratio(X)	0.57	0.54	0.04	0.32	0.85	0.00	0.23	0.00	0.00	0.02	0.00	0.21
Avail Cap(c_a), veh/h	79	2697	840	142	3056	952	476	0	0	519	0	492
HCM Platoon Ratio	1.00	1.00	1.00	1.00	1.00	1.00	1.00	1.00	1.00	1.00	1.00	1.00
Upstream Filter(I)	1.00	1.00	1.00	1.00	1.00	1.00	1.00	0.00	0.00	1.00	0.00	1.00
Uniform Delay (d), s/veh	55.6	18.5	13.5	50.1	19.4	9.7	30.1	0.0	0.0	28.0	0.0	29.7
Incr Delay (d2), s/veh	4.4	0.8	0.1	0.5	3.1	0.0	1.1	0.0	0.0	0.1	0.0	1.0
Initial Q Delay(d3),s/veh	0.0	0.0	0.0	0.0	0.0	0.0	0.0	0.0	0.0	0.0	0.0	0.0
%ile BackOfQ(50%),veh/ln	0.8	10.5	0.5	1.4	23.1	0.0	2.7	0.0	0.0	0.2	0.0	2.6
LnGrp Delay(d),s/veh	60.0	19.3	13.6	50.6	22.5	9.7	31.2	0.0	0.0	28.0	0.0	30.7
LnGrp LOS	E	B	B	D	C	A	C			C		C
Approach Vol, veh/h		1524			2635			108			114	
Approach Delay, s/veh		19.8			22.9			31.2			30.5	
Approach LOS		B			C			C			C	

Timer	1	2	3	4	5	6	7	8
Assigned Phs	1	2		4	5	6		8
Phs Duration (G+Y+Rc), s	14.9	65.6		40.1	6.9	73.7		40.1
Change Period (Y+Rc), s	5.8	* 5.8		5.1	* 4.2	5.8		5.1
Max Green Setting (Gmax), s	5.1	* 60		35.0	* 5	59.9		35.0
Max Q Clear Time (g_c+I1), s	4.8	23.8		7.5	3.5	49.0		8.6
Green Ext Time (p_c), s	0.0	8.4		0.6	0.0	8.7		0.6

Intersection Summary	
HCM 2010 Ctrl Delay	22.2
HCM 2010 LOS	C

Notes

Movement	WBL	WBR	NBT	NBR	SBL	SBT
Lane Configurations						
Traffic Volume (veh/h)	36	14	999	39	16	2039
Future Volume (veh/h)	36	14	999	39	16	2039
Number	3	18	2	12	1	6
Initial Q (Qb), veh	0	0	0	0	0	0
Ped-Bike Adj(A_pbT)	1.00	1.00		1.00	1.00	
Parking Bus, Adj	1.00	1.00	1.00	1.00	1.00	1.00
Adj Sat Flow, veh/h/ln	1900	1900	1900	1900	1900	1900
Adj Flow Rate, veh/h	47	18	1297	51	21	2648
Adj No. of Lanes	1	1	2	0	1	2
Peak Hour Factor	0.77	0.77	0.77	0.77	0.77	0.77
Percent Heavy Veh, %	0	0	0	0	0	0
Cap, veh/h	161	144	2555	100	41	2855
Arrive On Green	0.09	0.09	0.72	0.72	0.02	0.79
Sat Flow, veh/h	1810	1615	3636	139	1810	3705
Grp Volume(v), veh/h	47	18	660	688	21	2648
Grp Sat Flow(s),veh/h/ln	1810	1615	1805	1875	1810	1805
Q Serve(g_s), s	2.2	0.9	14.5	14.5	1.0	51.8
Cycle Q Clear(g_c), s	2.2	0.9	14.5	14.5	1.0	51.8
Prop In Lane	1.00	1.00		0.07	1.00	
Lane Grp Cap(c), veh/h	161	144	1302	1353	41	2855
V/C Ratio(X)	0.29	0.12	0.51	0.51	0.51	0.93
Avail Cap(c_a), veh/h	201	179	1302	1353	105	2855
HCM Platoon Ratio	1.00	1.00	1.00	1.00	1.00	1.00
Upstream Filter(I)	1.00	1.00	1.00	1.00	0.09	0.09
Uniform Delay (d), s/veh	38.3	37.7	5.5	5.5	43.5	7.4
Incr Delay (d2), s/veh	0.4	0.1	1.4	1.4	0.3	0.7
Initial Q Delay(d3),s/veh	0.0	0.0	0.0	0.0	0.0	0.0
%ile BackOfQ(50%),veh/ln	1.1	0.4	7.7	8.0	0.5	25.3
LnGrp Delay(d),s/veh	38.7	37.9	6.9	6.9	43.8	8.1
LnGrp LOS	D	D	A	A	D	A
Approach Vol, veh/h	65		1348			2669
Approach Delay, s/veh	38.5		6.9			8.4
Approach LOS	D		A			A

Timer	1	2	3	4	5	6	7	8
Assigned Phs	1	2				6		8
Phs Duration (G+Y+Rc), s	6.2	71.1				77.4		12.6
Change Period (Y+Rc), s	* 4.2	6.2				6.2		4.6
Max Green Setting (Gmax), s	* 5.2	59.8				69.2		10.0
Max Q Clear Time (g_c+I1), s	3.0	16.5				53.8		4.2
Green Ext Time (p_c), s	0.0	34.9				14.1		0.0

Intersection Summary	
HCM 2010 Ctrl Delay	8.4
HCM 2010 LOS	A

Notes

Movement	EBL	EBT	EBR	WBL	WBT	WBR	NBL	NBT	NBR	SBL	SBT	SBR
Lane Configurations												
Traffic Volume (veh/h)	678	488	112	19	863	31	168	205	27	51	238	1194
Future Volume (veh/h)	678	488	112	19	863	31	168	205	27	51	238	1194
Number	5	2	12	1	6	16	3	8	18	7	4	14
Initial Q (Qb), veh	0	0	0	0	0	0	0	0	0	0	0	0
Ped-Bike Adj(A_pbT)	1.00		1.00	1.00		1.00	1.00		1.00	1.00		1.00
Parking Bus, Adj	1.00	1.00	1.00	1.00	1.00	1.00	1.00	1.00	1.00	1.00	1.00	1.00
Adj Sat Flow, veh/h/ln	1900	1900	1900	1900	1900	1900	1900	1900	1900	1900	1900	1900
Adj Flow Rate, veh/h	827	595	128	23	1052	27	205	250	23	62	290	1373
Adj No. of Lanes	2	3	1	1	3	0	2	2	1	1	2	1
Peak Hour Factor	0.82	0.82	0.82	0.82	0.82	0.82	0.82	0.82	0.82	0.82	0.82	0.82
Percent Heavy Veh, %	0	0	0	0	0	0	0	0	0	0	0	0
Cap, veh/h	1613	3807	1185	40	1474	38	170	1098	491	80	1023	1200
Arrive On Green	0.46	0.73	0.73	0.02	0.28	0.28	0.05	0.30	0.30	0.04	0.28	0.28
Sat Flow, veh/h	3510	5187	1615	1810	5201	133	3510	3610	1613	1810	3610	1615
Grp Volume(v), veh/h	827	595	128	23	699	380	205	250	23	62	290	1373
Grp Sat Flow(s),veh/h/ln	1755	1729	1615	1810	1729	1876	1755	1805	1613	1810	1805	1615
Q Serve(g_s), s	20.0	4.1	4.1	1.5	21.8	21.8	5.8	6.2	1.2	4.1	7.5	34.0
Cycle Q Clear(g_c), s	20.0	4.1	4.1	1.5	21.8	21.8	5.8	6.2	1.2	4.1	7.5	34.0
Prop In Lane	1.00		1.00	1.00		0.07	1.00		1.00	1.00		1.00
Lane Grp Cap(c), veh/h	1613	3807	1185	40	980	532	170	1098	491	80	1023	1200
V/C Ratio(X)	0.51	0.16	0.11	0.57	0.71	0.71	1.21	0.23	0.05	0.78	0.28	1.14
Avail Cap(c_a), veh/h	1613	3807	1185	86	980	532	170	1098	491	97	1023	1200
HCM Platoon Ratio	1.00	1.00	1.00	1.00	1.00	1.00	1.00	1.00	1.00	1.00	1.00	1.00
Upstream Filter(I)	1.00	1.00	1.00	1.00	1.00	1.00	1.00	1.00	1.00	1.00	1.00	1.00
Uniform Delay (d), s/veh	22.9	4.8	10.0	58.1	38.6	38.6	57.1	31.2	29.5	56.8	33.5	15.4
Incr Delay (d2), s/veh	0.1	0.1	0.2	4.6	4.4	8.0	136.1	0.5	0.2	21.9	0.7	75.3
Initial Q Delay(d3),s/veh	0.0	0.0	0.0	0.0	0.0	0.0	0.0	0.0	0.0	0.0	0.0	0.0
%ile BackOfQ(50%),veh/ln	9.7	2.0	1.8	0.8	11.0	12.5	6.0	3.2	0.6	2.5	3.8	39.3
LnGrp Delay(d),s/veh	23.0	4.9	10.2	62.7	43.1	46.6	193.2	31.7	29.7	78.6	34.2	90.7
LnGrp LOS	C	A	B	E	D	D	F	C	C	E	C	F
Approach Vol, veh/h		1550			1102			478			1725	
Approach Delay, s/veh		15.0			44.7			100.9			80.8	
Approach LOS		B			D			F			F	

Timer	1	2	3	4	5	6	7	8
Assigned Phs	1	2	3	4	5	6	7	8
Phs Duration (G+Y+Rc), s	6.9	93.9	11.2	40.2	60.9	39.8	9.5	41.9
Change Period (Y+Rc), s	* 4.2	5.8	5.4	* 6.2	5.8	* 5.8	* 4.2	5.4
Max Green Setting (Gmax), s	* 5.7	54.1	5.8	* 34	25.8	* 34	* 6.4	34.2
Max Q Clear Time (g_c+I1), s	3.5	6.1	7.8	36.0	22.0	23.8	6.1	8.2
Green Ext Time (p_c), s	0.0	4.6	0.0	0.0	1.0	3.2	0.0	1.3

Intersection Summary	
HCM 2010 Ctrl Delay	53.6
HCM 2010 LOS	D

Notes

APPENDIX 6.8:

OPENING YEAR CUMULATIVE (2020) WITH PROJECT CONDITIONS INTERSECTION OPERATIONS ANALYSIS WORKSHEETS WITH IMPROVEMENTS

This Page Intentionally Left Blank

Movement	EBL	EBT	EBR	WBL	WBT	WBR	NBL	NBT	NBR	SBL	SBT	SBR
Lane Configurations												
Traffic Volume (veh/h)	0	717	44	313	335	0	0	0	0	1581	3	369
Future Volume (veh/h)	0	717	44	313	335	0	0	0	0	1581	3	369
Number	5	2	12	1	6	16				7	4	14
Initial Q (Qb), veh	0	0	0	0	0	0				0	0	0
Ped-Bike Adj(A_pbT)	1.00		1.00	1.00		1.00				1.00		1.00
Parking Bus, Adj	1.00	1.00	1.00	1.00	1.00	1.00				1.00	1.00	1.00
Adj Sat Flow, veh/h/ln	0	1900	1900	1900	1900	0				1900	1900	1900
Adj Flow Rate, veh/h	0	788	45	344	368	0				1737	3	340
Adj No. of Lanes	0	2	1	2	2	0				2	1	0
Peak Hour Factor	0.91	0.91	0.91	0.91	0.91	0.91				0.91	0.91	0.91
Percent Heavy Veh, %	0	0	0	0	0	0				0	0	0
Cap, veh/h	0	918	411	395	1460	0				1798	7	821
Arrive On Green	0.00	0.25	0.25	0.15	0.54	0.00				0.51	0.51	0.51
Sat Flow, veh/h	0	3705	1615	3510	3705	0				3510	14	1603
Grp Volume(v), veh/h	0	788	45	344	368	0				1737	0	343
Grp Sat Flow(s),veh/h/ln	0	1805	1615	1755	1805	0				1755	0	1617
Q Serve(g_s), s	0.0	25.0	2.6	11.5	6.5	0.0				57.3	0.0	15.8
Cycle Q Clear(g_c), s	0.0	25.0	2.6	11.5	6.5	0.0				57.3	0.0	15.8
Prop In Lane	0.00		1.00	1.00		0.00				1.00		0.99
Lane Grp Cap(c), veh/h	0	918	411	395	1460	0				1798	0	828
V/C Ratio(X)	0.00	0.86	0.11	0.87	0.25	0.00				0.97	0.00	0.41
Avail Cap(c_a), veh/h	0	918	411	395	1460	0				1814	0	836
HCM Platoon Ratio	1.00	1.00	1.00	1.33	1.33	1.00				1.00	1.00	1.00
Upstream Filter(I)	0.00	1.00	1.00	0.92	0.92	0.00				1.00	0.00	1.00
Uniform Delay (d), s/veh	0.0	42.7	34.3	50.2	18.0	0.0				28.3	0.0	18.1
Incr Delay (d2), s/veh	0.0	10.2	0.5	16.7	0.4	0.0				13.9	0.0	0.3
Initial Q Delay(d3),s/veh	0.0	0.0	0.0	0.0	0.0	0.0				0.0	0.0	0.0
%ile BackOfQ(50%),veh/ln	0.0	13.8	1.2	6.5	3.3	0.0				31.2	0.0	7.1
LnGrp Delay(d),s/veh	0.0	52.9	34.8	66.9	18.4	0.0				42.1	0.0	18.4
LnGrp LOS		D	C	E	B					D		B
Approach Vol, veh/h		833			712						2080	
Approach Delay, s/veh		51.9			41.8						38.2	
Approach LOS		D			D						D	

Timer	1	2	3	4	5	6	7	8
Assigned Phs	1	2		4		6		
Phs Duration (G+Y+Rc), s	18.0	35.5		66.5		53.5		
Change Period (Y+Rc), s	4.5	5.0		5.0		5.0		
Max Green Setting (Gmax), s	13.5	30.0		62.0		48.0		
Max Q Clear Time (g_c+I1), s	13.5	27.0		59.3		8.5		
Green Ext Time (p_c), s	0.0	1.5		2.2		5.3		

Intersection Summary	
HCM 2010 Ctrl Delay	42.1
HCM 2010 LOS	D

Movement	EBL	EBT	EBR	WBL	WBT	WBR	NBL	NBT	NBR	SBL	SBT	SBR
Lane Configurations												
Traffic Volume (veh/h)	438	1860	0	0	554	860	93	4	414	0	0	0
Future Volume (veh/h)	438	1860	0	0	554	860	93	4	414	0	0	0
Number	5	2	12	1	6	16	3	8	18			
Initial Q (Qb), veh	0	0	0	0	0	0	0	0	0			
Ped-Bike Adj(A_pbT)	1.00		1.00	1.00		1.00	1.00		1.00			
Parking Bus, Adj	1.00	1.00	1.00	1.00	1.00	1.00	1.00	1.00	1.00			
Adj Sat Flow, veh/h/ln	1900	1900	0	0	1900	1900	1900	1900	1900			
Adj Flow Rate, veh/h	503	2138	0	0	637	0	107	5	422			
Adj No. of Lanes	2	2	0	0	2	1	0	1	1			
Peak Hour Factor	0.87	0.87	0.87	0.87	0.87	0.87	0.87	0.87	0.87			
Percent Heavy Veh, %	0	0	0	0	0	0	0	0	0			
Cap, veh/h	567	2286	0	0	1598	715	491	23	458			
Arrive On Green	0.16	0.63	0.00	0.00	0.44	0.00	0.28	0.28	0.28			
Sat Flow, veh/h	3510	3705	0	0	3705	1615	1732	81	1615			
Grp Volume(v), veh/h	503	2138	0	0	637	0	112	0	422			
Grp Sat Flow(s),veh/h/ln	1755	1805	0	0	1805	1615	1813	0	1615			
Q Serve(g_s), s	16.8	63.9	0.0	0.0	14.3	0.0	5.7	0.0	30.4			
Cycle Q Clear(g_c), s	16.8	63.9	0.0	0.0	14.3	0.0	5.7	0.0	30.4			
Prop In Lane	1.00		0.00	0.00		1.00	0.96		1.00			
Lane Grp Cap(c), veh/h	567	2286	0	0	1598	715	514	0	458			
V/C Ratio(X)	0.89	0.94	0.00	0.00	0.40	0.00	0.22	0.00	0.92			
Avail Cap(c_a), veh/h	717	2286	0	0	1598	715	514	0	458			
HCM Platoon Ratio	1.00	1.00	1.00	1.00	1.00	1.00	1.00	1.00	1.00			
Upstream Filter(I)	0.25	0.25	0.00	0.00	0.61	0.00	1.00	0.00	1.00			
Uniform Delay (d), s/veh	49.2	19.8	0.0	0.0	22.6	0.0	32.8	0.0	41.7			
Incr Delay (d2), s/veh	2.6	2.6	0.0	0.0	0.5	0.0	1.0	0.0	26.5			
Initial Q Delay(d3),s/veh	0.0	0.0	0.0	0.0	0.0	0.0	0.0	0.0	0.0			
%ile BackOfQ(50%),veh/ln	8.4	32.3	0.0	0.0	7.3	0.0	3.0	0.0	17.0			
LnGrp Delay(d),s/veh	51.9	22.4	0.0	0.0	23.1	0.0	33.8	0.0	68.3			
LnGrp LOS	D	C			C		C		E			
Approach Vol, veh/h		2641			637			534				
Approach Delay, s/veh		28.0			23.1			61.0				
Approach LOS		C			C			E				

Timer	1	2	3	4	5	6	7	8
Assigned Phs		2			5	6		8
Phs Duration (G+Y+Rc), s		81.0			22.9	58.1		39.0
Change Period (Y+Rc), s		5.0			3.5	5.0		5.0
Max Green Setting (Gmax), s		76.0			24.5	48.0		34.0
Max Q Clear Time (g_c+I1), s		65.9			18.8	16.3		32.4
Green Ext Time (p_c), s		8.3			0.6	19.6		0.4

Intersection Summary	
HCM 2010 Ctrl Delay	31.8
HCM 2010 LOS	C

Movement	EBL	EBT	WBT	WBR	SBL	SBR
Lane Configurations						
Traffic Volume (veh/h)	75	2200	1340	29	2	75
Future Volume (veh/h)	75	2200	1340	29	2	75
Number	5	2	6	16	7	14
Initial Q (Qb), veh	0	0	0	0	0	0
Ped-Bike Adj(A_pbT)	1.00			1.00	1.00	1.00
Parking Bus, Adj	1.00	1.00	1.00	1.00	1.00	1.00
Adj Sat Flow, veh/h/ln	1900	1900	1900	1900	1900	1900
Adj Flow Rate, veh/h	91	2683	1634	35	2	91
Adj No. of Lanes	1	2	2	1	0	0
Peak Hour Factor	0.82	0.82	0.82	0.82	0.82	0.82
Percent Heavy Veh, %	0	0	0	0	0	0
Cap, veh/h	116	2657	2273	1017	6	251
Arrive On Green	0.06	0.74	0.63	0.63	0.16	0.16
Sat Flow, veh/h	1810	3705	3705	1615	34	1570
Grp Volume(v), veh/h	91	2683	1634	35	94	0
Grp Sat Flow(s),veh/h/ln	1810	1805	1805	1615	1621	0
Q Serve(g_s), s	5.0	73.6	30.6	0.8	5.2	0.0
Cycle Q Clear(g_c), s	5.0	73.6	30.6	0.8	5.2	0.0
Prop In Lane	1.00			1.00	0.02	0.97
Lane Grp Cap(c), veh/h	116	2657	2273	1017	259	0
V/C Ratio(X)	0.78	1.01	0.72	0.03	0.36	0.00
Avail Cap(c_a), veh/h	208	2657	2273	1017	259	0
HCM Platoon Ratio	1.00	1.00	1.00	1.00	1.00	1.00
Upstream Filter(I)	0.23	0.23	1.00	1.00	1.00	0.00
Uniform Delay (d), s/veh	46.1	13.2	12.5	7.0	37.5	0.0
Incr Delay (d2), s/veh	1.0	10.9	2.0	0.1	3.9	0.0
Initial Q Delay(d3),s/veh	0.0	0.0	0.0	0.0	0.0	0.0
%ile BackOfQ(50%),veh/ln	2.5	39.8	15.6	0.4	2.6	0.0
LnGrp Delay(d),s/veh	47.1	24.1	14.5	7.1	41.3	0.0
LnGrp LOS	D	F	B	A	D	
Approach Vol, veh/h		2774	1669		94	
Approach Delay, s/veh		24.8	14.4		41.3	
Approach LOS		C	B		D	

Timer	1	2	3	4	5	6	7	8
Assigned Phs		2		4	5	6		
Phs Duration (G+Y+Rc), s		79.4		20.6	10.6	68.8		
Change Period (Y+Rc), s		5.8		4.6	* 4.2	5.8		
Max Green Setting (Gmax), s		73.6		16.0	* 12	57.9		
Max Q Clear Time (g_c+I1), s		75.6		7.2	7.0	32.6		
Green Ext Time (p_c), s		0.0		0.1	0.0	23.5		

Intersection Summary	
HCM 2010 Ctrl Delay	21.3
HCM 2010 LOS	C

Notes

Movement	EBL	EBT	EBR	WBL	WBT	WBR	NBL	NBT	NBR	SBL	SBT	SBR
Lane Configurations												
Traffic Volume (veh/h)	87	2031	12	13	1215	15	99	2	40	3	4	20
Future Volume (veh/h)	87	2031	12	13	1215	15	99	2	40	3	4	20
Number	5	2	12	1	6	16	3	8	18	7	4	14
Initial Q (Qb), veh	0	0	0	0	0	0	0	0	0	0	0	0
Ped-Bike Adj(A_pbT)	1.00		1.00	1.00		1.00	1.00		1.00	1.00		1.00
Parking Bus, Adj	1.00	1.00	1.00	1.00	1.00	1.00	1.00	1.00	1.00	1.00	1.00	1.00
Adj Sat Flow, veh/h/ln	1900	1900	1900	1900	1900	1900	1900	1900	1900	1900	1900	1900
Adj Flow Rate, veh/h	106	2477	13	16	1482	18	121	2	44	4	5	22
Adj No. of Lanes	1	3	1	1	3	1	0	1	0	0	1	1
Peak Hour Factor	0.82	0.82	0.82	0.82	0.82	0.82	0.82	0.82	0.82	0.82	0.82	0.82
Percent Heavy Veh, %	0	0	0	0	0	0	0	0	0	0	0	0
Cap, veh/h	131	2932	913	31	2646	824	354	13	113	241	286	471
Arrive On Green	0.07	0.57	0.57	0.02	0.51	0.51	0.29	0.29	0.29	0.29	0.29	0.29
Sat Flow, veh/h	1810	5187	1615	1810	5187	1615	1035	46	387	676	981	1615
Grp Volume(v), veh/h	106	2477	13	16	1482	18	167	0	0	9	0	22
Grp Sat Flow(s),veh/h/ln	1810	1729	1615	1810	1729	1615	1468	0	0	1658	0	1615
Q Serve(g_s), s	6.9	47.7	0.4	1.1	23.5	0.7	10.0	0.0	0.0	0.0	0.0	1.2
Cycle Q Clear(g_c), s	6.9	47.7	0.4	1.1	23.5	0.7	10.8	0.0	0.0	0.4	0.0	1.2
Prop In Lane	1.00		1.00	1.00		1.00	0.72		0.26	0.44		1.00
Lane Grp Cap(c), veh/h	131	2932	913	31	2646	824	480	0	0	527	0	471
V/C Ratio(X)	0.81	0.84	0.01	0.51	0.56	0.02	0.35	0.00	0.00	0.02	0.00	0.05
Avail Cap(c_a), veh/h	157	2932	913	75	2646	824	480	0	0	527	0	471
HCM Platoon Ratio	1.00	1.00	1.00	1.00	1.00	1.00	1.00	1.00	1.00	1.00	1.00	1.00
Upstream Filter(I)	1.00	1.00	1.00	1.00	1.00	1.00	1.00	0.00	0.00	1.00	0.00	1.00
Uniform Delay (d), s/veh	54.8	21.7	11.4	58.5	20.2	14.6	33.9	0.0	0.0	30.2	0.0	30.5
Incr Delay (d2), s/veh	19.3	3.2	0.0	4.8	0.9	0.0	2.0	0.0	0.0	0.1	0.0	0.2
Initial Q Delay(d3),s/veh	0.0	0.0	0.0	0.0	0.0	0.0	0.0	0.0	0.0	0.0	0.0	0.0
%ile BackOfQ(50%),veh/ln	4.2	23.3	0.2	0.6	11.3	0.3	4.7	0.0	0.0	0.2	0.0	0.6
LnGrp Delay(d),s/veh	74.1	24.9	11.5	63.3	21.0	14.6	35.8	0.0	0.0	30.3	0.0	30.7
LnGrp LOS	E	C	B	E	C	B	D			C		C
Approach Vol, veh/h		2596			1516			167			31	
Approach Delay, s/veh		26.8			21.4			35.8			30.6	
Approach LOS		C			C			D			C	

Timer	1	2	3	4	5	6	7	8
Assigned Phs	1	2		4	5	6		8
Phs Duration (G+Y+Rc), s	6.3	73.6		40.1	12.9	67.0		40.1
Change Period (Y+Rc), s	* 4.2	5.8		5.1	* 4.2	5.8		5.1
Max Green Setting (Gmax), s	* 5	64.9		35.0	* 10	59.5		35.0
Max Q Clear Time (g_c+I1), s	3.1	49.7		3.2	8.9	25.5		12.8
Green Ext Time (p_c), s	0.0	14.0		0.7	0.0	28.6		0.6

Intersection Summary	
HCM 2010 Ctrl Delay	25.3
HCM 2010 LOS	C

Notes

Movement	WBL	WBR	NBT	NBR	SBL	SBT
Lane Configurations						
Traffic Volume (veh/h)	26	6	1851	38	1	736
Future Volume (veh/h)	26	6	1851	38	1	736
Number	3	18	2	12	1	6
Initial Q (Qb), veh	0	0	0	0	0	0
Ped-Bike Adj(A_pbT)	1.00	1.00		1.00	1.00	
Parking Bus, Adj	1.00	1.00	1.00	1.00	1.00	1.00
Adj Sat Flow, veh/h/ln	1900	1900	1900	1900	1900	1900
Adj Flow Rate, veh/h	31	7	2204	45	1	876
Adj No. of Lanes	1	1	2	0	1	2
Peak Hour Factor	0.84	0.84	0.84	0.84	0.84	0.84
Percent Heavy Veh, %	0	0	0	0	0	0
Cap, veh/h	123	110	2764	56	2	2931
Arrive On Green	0.07	0.07	0.76	0.76	0.00	0.81
Sat Flow, veh/h	1810	1615	3713	74	1810	3705
Grp Volume(v), veh/h	31	7	1096	1153	1	876
Grp Sat Flow(s),veh/h/ln	1810	1615	1805	1887	1810	1805
Q Serve(g_s), s	1.5	0.4	32.8	33.4	0.0	5.4
Cycle Q Clear(g_c), s	1.5	0.4	32.8	33.4	0.0	5.4
Prop In Lane	1.00	1.00		0.04	1.00	
Lane Grp Cap(c), veh/h	123	110	1379	1441	2	2931
V/C Ratio(X)	0.25	0.06	0.79	0.80	0.40	0.30
Avail Cap(c_a), veh/h	205	183	1379	1441	103	2931
HCM Platoon Ratio	1.00	1.00	1.00	1.00	1.00	1.00
Upstream Filter(I)	1.00	1.00	1.00	1.00	0.92	0.92
Uniform Delay (d), s/veh	39.8	39.2	6.4	6.5	44.9	2.1
Incr Delay (d2), s/veh	0.4	0.1	4.8	4.8	32.2	0.2
Initial Q Delay(d3),s/veh	0.0	0.0	0.0	0.0	0.0	0.0
%ile BackOfQ(50%),veh/ln	0.7	0.2	17.7	18.9	0.0	2.8
LnGrp Delay(d),s/veh	40.2	39.3	11.2	11.2	77.1	2.3
LnGrp LOS	D	D	B	B	E	A
Approach Vol, veh/h	38		2249			877
Approach Delay, s/veh	40.0		11.2			2.4
Approach LOS	D		B			A

Timer	1	2	3	4	5	6	7	8
Assigned Phs	1	2				6		8
Phs Duration (G+Y+Rc), s	4.3	74.9				79.3		10.7
Change Period (Y+Rc), s *	4.2	6.2				6.2		4.6
Max Green Setting (Gmax), s	5.1	59.7				69.0		10.2
Max Q Clear Time (g_c+I1), s	2.5	35.4				7.4		3.5
Green Ext Time (p_c), s	0.0	17.3				29.6		0.0

Intersection Summary	
HCM 2010 Ctrl Delay	9.1
HCM 2010 LOS	A

Notes

Movement	EBL	EBT	EBR	WBL	WBT	WBR	NBL	NBT	NBR	SBL	SBT	SBR
Lane Configurations												
Traffic Volume (veh/h)	1023	877	148	22	609	60	114	222	21	16	80	477
Future Volume (veh/h)	1023	877	148	22	609	60	114	222	21	16	80	477
Number	5	2	12	1	6	16	3	8	18	7	4	14
Initial Q (Qb), veh	0	0	0	0	0	0	0	0	0	0	0	0
Ped-Bike Adj(A_pbT)	1.00		1.00	1.00		0.99	1.00		1.00	1.00		1.00
Parking Bus, Adj	1.00	1.00	1.00	1.00	1.00	1.00	1.00	1.00	1.00	1.00	1.00	1.00
Adj Sat Flow, veh/h/ln	1900	1900	1900	1900	1900	1900	1900	1900	1900	1900	1900	1900
Adj Flow Rate, veh/h	1112	953	153	24	662	58	124	241	9	17	87	486
Adj No. of Lanes	2	3	1	1	3	0	2	2	1	1	2	1
Peak Hour Factor	0.92	0.92	0.92	0.92	0.92	0.92	0.92	0.92	0.92	0.92	0.92	0.92
Percent Heavy Veh, %	0	0	0	0	0	0	0	0	0	0	0	0
Cap, veh/h	2097	4509	1404	42	1368	119	146	1108	496	33	1023	1422
Arrive On Green	0.60	0.87	0.87	0.02	0.28	0.28	0.04	0.31	0.31	0.02	0.28	0.28
Sat Flow, veh/h	3510	5187	1615	1810	4855	422	3510	3610	1615	1810	3610	1615
Grp Volume(v), veh/h	1112	953	153	24	470	250	124	241	9	17	87	486
Grp Sat Flow(s),veh/h/ln	1755	1729	1615	1810	1729	1819	1755	1805	1615	1810	1805	1615
Q Serve(g_s), s	22.4	3.5	1.6	1.6	13.6	13.7	4.2	5.9	0.5	1.1	2.1	4.0
Cycle Q Clear(g_c), s	22.4	3.5	1.6	1.6	13.6	13.7	4.2	5.9	0.5	1.1	2.1	4.0
Prop In Lane	1.00		1.00	1.00		0.23	1.00		1.00	1.00		1.00
Lane Grp Cap(c), veh/h	2097	4509	1404	42	974	512	146	1108	496	33	1023	1422
V/C Ratio(X)	0.53	0.21	0.11	0.58	0.48	0.49	0.85	0.22	0.02	0.52	0.09	0.34
Avail Cap(c_a), veh/h	2097	4509	1404	87	974	512	146	1108	496	75	1023	1422
HCM Platoon Ratio	1.00	1.00	1.00	1.00	1.00	1.00	1.00	1.00	1.00	1.00	1.00	1.00
Upstream Filter(I)	1.00	1.00	1.00	1.00	1.00	1.00	1.00	1.00	1.00	1.00	1.00	1.00
Uniform Delay (d), s/veh	14.2	1.3	1.1	58.0	35.8	35.9	57.1	30.9	29.0	58.4	31.6	9.9
Incr Delay (d2), s/veh	0.1	0.1	0.2	4.7	1.7	3.3	33.2	0.5	0.1	4.7	0.2	0.7
Initial Q Delay(d3),s/veh	0.0	0.0	0.0	0.0	0.0	0.0	0.0	0.0	0.0	0.0	0.0	0.0
%ile BackOfQ(50%),veh/ln	10.8	1.7	0.8	0.8	6.7	7.3	2.7	3.0	0.2	0.6	1.1	7.7
LnGrp Delay(d),s/veh	14.4	1.4	1.3	62.7	37.5	39.2	90.3	31.3	29.0	63.1	31.7	10.5
LnGrp LOS	B	A	A	E	D	D	F	C	C	E	C	B
Approach Vol, veh/h		2218			744			374			590	
Approach Delay, s/veh		7.9			38.9			50.8			15.2	
Approach LOS		A			D			D			B	

Timer	1	2	3	4	5	6	7	8
Assigned Phs	1	2	3	4	5	6	7	8
Phs Duration (G+Y+Rc), s	7.0	110.2	9.2	40.2	77.6	39.6	6.4	43.0
Change Period (Y+Rc), s	* 4.2	5.8	* 4.2	6.2	5.8	* 5.8	* 4.2	* 6.2
Max Green Setting (Gmax), s	* 5.8	54.8	* 5	34.0	26.8	* 34	* 5	* 35
Max Q Clear Time (g_c+I1), s	3.6	5.5	6.2	6.0	24.4	15.7	3.1	7.9
Green Ext Time (p_c), s	0.0	8.4	0.0	2.1	0.9	2.6	0.0	2.1

Intersection Summary	
HCM 2010 Ctrl Delay	18.9
HCM 2010 LOS	B

Notes

Movement	EBL	EBT	EBR	WBL	WBT	WBR	NBL	NBT	NBR	SBL	SBT	SBR
Lane Configurations												
Traffic Volume (veh/h)	0	713	132	704	203	0	0	0	0	874	3	313
Future Volume (veh/h)	0	713	132	704	203	0	0	0	0	874	3	313
Number	5	2	12	1	6	16				7	4	14
Initial Q (Qb), veh	0	0	0	0	0	0				0	0	0
Ped-Bike Adj(A_pbT)	1.00		1.00	1.00		1.00				1.00		1.00
Parking Bus, Adj	1.00	1.00	1.00	1.00	1.00	1.00				1.00	1.00	1.00
Adj Sat Flow, veh/h/ln	0	1900	1900	1900	1900	0				1900	1900	1900
Adj Flow Rate, veh/h	0	810	140	800	231	0				993	3	283
Adj No. of Lanes	0	2	1	2	2	0				2	1	0
Peak Hour Factor	0.88	0.88	0.88	0.88	0.88	0.88				0.88	0.88	0.88
Percent Heavy Veh, %	0	0	0	0	0	0				0	0	0
Cap, veh/h	0	1163	520	873	2196	0				1083	5	494
Arrive On Green	0.00	0.32	0.32	0.08	0.20	0.00				0.31	0.31	0.31
Sat Flow, veh/h	0	3705	1615	3510	3705	0				3510	17	1601
Grp Volume(v), veh/h	0	810	140	800	231	0				993	0	286
Grp Sat Flow(s),veh/h/ln	0	1805	1615	1755	1805	0				1755	0	1618
Q Serve(g_s), s	0.0	23.5	7.7	27.1	6.3	0.0				32.7	0.0	17.8
Cycle Q Clear(g_c), s	0.0	23.5	7.7	27.1	6.3	0.0				32.7	0.0	17.8
Prop In Lane	0.00		1.00	1.00		0.00				1.00		0.99
Lane Grp Cap(c), veh/h	0	1163	520	873	2196	0				1083	0	499
V/C Ratio(X)	0.00	0.70	0.27	0.92	0.11	0.00				0.92	0.00	0.57
Avail Cap(c_a), veh/h	0	1163	520	951	2196	0				1141	0	526
HCM Platoon Ratio	1.00	1.00	1.00	0.33	0.33	1.00				1.00	1.00	1.00
Upstream Filter(I)	0.00	1.00	1.00	0.64	0.64	0.00				1.00	0.00	1.00
Uniform Delay (d), s/veh	0.0	35.6	30.2	53.8	21.3	0.0				40.0	0.0	34.9
Incr Delay (d2), s/veh	0.0	3.5	1.3	8.4	0.1	0.0				11.3	0.0	1.4
Initial Q Delay(d3),s/veh	0.0	0.0	0.0	0.0	0.0	0.0				0.0	0.0	0.0
%ile BackOfQ(50%),veh/ln	0.0	12.3	3.6	14.2	3.2	0.0				17.6	0.0	8.1
LnGrp Delay(d),s/veh	0.0	39.0	31.5	62.2	21.4	0.0				51.3	0.0	36.2
LnGrp LOS		D	C	E	C					D		D
Approach Vol, veh/h		950			1031						1279	
Approach Delay, s/veh		37.9			53.1						47.9	
Approach LOS		D			D						D	

Timer	1	2	3	4	5	6	7	8
Assigned Phs	1	2		4		6		
Phs Duration (G+Y+Rc), s	34.3	43.6		42.0		78.0		
Change Period (Y+Rc), s	4.5	5.0		5.0		5.0		
Max Green Setting (Gmax), s	32.5	34.0		39.0		71.0		
Max Q Clear Time (g_c+I1), s	29.1	25.5		34.7		8.3		
Green Ext Time (p_c), s	0.7	3.1		2.3		4.9		

Intersection Summary	
HCM 2010 Ctrl Delay	46.6
HCM 2010 LOS	D

Movement	EBL	EBT	EBR	WBL	WBT	WBR	NBL	NBT	NBR	SBL	SBT	SBR
Lane Configurations												
Traffic Volume (veh/h)	509	1077	0	0	857	1695	51	0	297	0	0	0
Future Volume (veh/h)	509	1077	0	0	857	1695	51	0	297	0	0	0
Number	5	2	12	1	6	16	3	8	18			
Initial Q (Qb), veh	0	0	0	0	0	0	0	0	0			
Ped-Bike Adj(A_pbT)	1.00		1.00	1.00		1.00	1.00		1.00			
Parking Bus, Adj	1.00	1.00	1.00	1.00	1.00	1.00	1.00	1.00	1.00			
Adj Sat Flow, veh/h/ln	1900	1900	0	0	1900	1900	1900	1900	1900			
Adj Flow Rate, veh/h	606	1282	0	0	1020	0	61	0	186			
Adj No. of Lanes	2	2	0	0	2	1	0	1	1			
Peak Hour Factor	0.84	0.84	0.84	0.84	0.84	0.84	0.84	0.84	0.84			
Percent Heavy Veh, %	0	0	0	0	0	0	0	0	0			
Cap, veh/h	656	2286	0	0	1506	674	513	0	458			
Arrive On Green	0.37	1.00	0.00	0.00	0.42	0.00	0.28	0.00	0.28			
Sat Flow, veh/h	3510	3705	0	0	3705	1615	1810	0	1615			
Grp Volume(v), veh/h	606	1282	0	0	1020	0	61	0	186			
Grp Sat Flow(s),veh/h/ln	1755	1805	0	0	1805	1615	1810	0	1615			
Q Serve(g_s), s	19.8	0.0	0.0	0.0	27.5	0.0	3.0	0.0	11.2			
Cycle Q Clear(g_c), s	19.8	0.0	0.0	0.0	27.5	0.0	3.0	0.0	11.2			
Prop In Lane	1.00		0.00	0.00		1.00	1.00		1.00			
Lane Grp Cap(c), veh/h	656	2286	0	0	1506	674	513	0	458			
V/C Ratio(X)	0.92	0.56	0.00	0.00	0.68	0.00	0.12	0.00	0.41			
Avail Cap(c_a), veh/h	775	2286	0	0	1506	674	513	0	458			
HCM Platoon Ratio	2.00	2.00	1.00	1.00	1.00	1.00	1.00	1.00	1.00			
Upstream Filter(I)	0.47	0.47	0.00	0.00	0.09	0.00	1.00	0.00	1.00			
Uniform Delay (d), s/veh	36.7	0.0	0.0	0.0	28.4	0.0	31.9	0.0	34.8			
Incr Delay (d2), s/veh	7.6	0.5	0.0	0.0	0.2	0.0	0.5	0.0	2.7			
Initial Q Delay(d3),s/veh	0.0	0.0	0.0	0.0	0.0	0.0	0.0	0.0	0.0			
%ile BackOfQ(50%),veh/ln	10.1	0.1	0.0	0.0	13.8	0.0	1.6	0.0	5.4			
LnGrp Delay(d),s/veh	44.3	0.5	0.0	0.0	28.6	0.0	32.4	0.0	37.5			
LnGrp LOS	D	A			C		C		D			
Approach Vol, veh/h		1888			1020			247				
Approach Delay, s/veh		14.5			28.6			36.2				
Approach LOS		B			C			D				

Timer	1	2	3	4	5	6	7	8
Assigned Phs		2			5	6		8
Phs Duration (G+Y+Rc), s		81.0			25.9	55.1		39.0
Change Period (Y+Rc), s		5.0			3.5	5.0		5.0
Max Green Setting (Gmax), s		76.0			26.5	46.0		34.0
Max Q Clear Time (g_c+I1), s		2.0			21.8	29.5		13.2
Green Ext Time (p_c), s		16.7			0.6	9.8		0.8

Intersection Summary	
HCM 2010 Ctrl Delay	20.8
HCM 2010 LOS	C

Movement	EBL	EBT	WBT	WBR	SBL	SBR
Lane Configurations						
Traffic Volume (veh/h)	22	1352	2457	7	15	93
Future Volume (veh/h)	22	1352	2457	7	15	93
Number	5	2	6	16	7	14
Initial Q (Qb), veh	0	0	0	0	0	0
Ped-Bike Adj(A_pbT)	1.00			1.00	1.00	1.00
Parking Bus, Adj	1.00	1.00	1.00	1.00	1.00	1.00
Adj Sat Flow, veh/h/ln	1900	1900	1900	1900	1900	1900
Adj Flow Rate, veh/h	25	1536	2792	8	17	106
Adj No. of Lanes	1	2	2	1	0	0
Peak Hour Factor	0.88	0.88	0.88	0.88	0.88	0.88
Percent Heavy Veh, %	0	0	0	0	0	0
Cap, veh/h	43	2816	2604	1165	30	187
Arrive On Green	0.02	0.78	0.72	0.72	0.13	0.13
Sat Flow, veh/h	1810	3705	3705	1615	225	1403
Grp Volume(v), veh/h	25	1536	2792	8	124	0
Grp Sat Flow(s),veh/h/ln	1810	1805	1805	1615	1641	0
Q Serve(g_s), s	1.6	19.6	86.6	0.2	8.5	0.0
Cycle Q Clear(g_c), s	1.6	19.6	86.6	0.2	8.5	0.0
Prop In Lane	1.00			1.00	0.14	0.85
Lane Grp Cap(c), veh/h	43	2816	2604	1165	219	0
V/C Ratio(X)	0.59	0.55	1.07	0.01	0.57	0.00
Avail Cap(c_a), veh/h	75	2816	2604	1165	219	0
HCM Platoon Ratio	1.00	1.00	1.00	1.00	1.00	1.00
Upstream Filter(I)	0.78	0.78	1.00	1.00	1.00	0.00
Uniform Delay (d), s/veh	58.0	5.1	16.7	4.7	48.8	0.0
Incr Delay (d2), s/veh	3.7	0.6	40.6	0.0	10.2	0.0
Initial Q Delay(d3),s/veh	0.0	0.0	0.0	0.0	0.0	0.0
%ile BackOfQ(50%),veh/ln	0.9	9.8	57.0	0.1	4.5	0.0
LnGrp Delay(d),s/veh	61.7	5.7	57.3	4.7	59.0	0.0
LnGrp LOS	E	A	F	A	E	
Approach Vol, veh/h		1561	2800		124	
Approach Delay, s/veh		6.5	57.2		59.0	
Approach LOS		A	E		E	

Timer	1	2	3	4	5	6	7	8
Assigned Phs		2		4	5	6		
Phs Duration (G+Y+Rc), s		99.4		20.6	7.0	92.4		
Change Period (Y+Rc), s		5.8		4.6	* 4.2	5.8		
Max Green Setting (Gmax), s		93.6		16.0	* 5	84.4		
Max Q Clear Time (g_c+I1), s		21.6		10.5	3.6	88.6		
Green Ext Time (p_c), s		60.3		0.1	0.0	0.0		

Intersection Summary	
HCM 2010 Ctrl Delay	39.6
HCM 2010 LOS	D

Notes

Movement	EBL	EBT	EBR	WBL	WBT	WBR	NBL	NBT	NBR	SBL	SBT	SBR
Lane Configurations												
Traffic Volume (veh/h)	20	1287	26	41	2269	3	71	4	21	7	2	94
Future Volume (veh/h)	20	1287	26	41	2269	3	71	4	21	7	2	94
Number	5	2	12	1	6	16	3	8	18	7	4	14
Initial Q (Qb), veh	0	0	0	0	0	0	0	0	0	0	0	0
Ped-Bike Adj(A_pbT)	1.00		1.00	1.00		1.00	1.00		1.00	1.00		1.00
Parking Bus, Adj	1.00	1.00	1.00	1.00	1.00	1.00	1.00	1.00	1.00	1.00	1.00	1.00
Adj Sat Flow, veh/h/ln	1900	1900	1900	1900	1900	1900	1900	1900	1900	1900	1900	1900
Adj Flow Rate, veh/h	24	1514	31	48	2669	3	84	5	20	8	2	104
Adj No. of Lanes	1	3	1	1	3	1	0	1	0	0	1	1
Peak Hour Factor	0.85	0.85	0.85	0.85	0.85	0.85	0.85	0.85	0.85	0.85	0.85	0.85
Percent Heavy Veh, %	0	0	0	0	0	0	0	0	0	0	0	0
Cap, veh/h	42	2749	856	62	2807	874	373	27	77	420	99	492
Arrive On Green	0.02	0.53	0.53	0.03	0.54	0.54	0.30	0.30	0.30	0.30	0.30	0.30
Sat Flow, veh/h	1810	5187	1615	1810	5187	1615	1042	88	254	1193	326	1615
Grp Volume(v), veh/h	24	1514	31	48	2669	3	109	0	0	10	0	104
Grp Sat Flow(s),veh/h/ln	1810	1729	1615	1810	1729	1615	1384	0	0	1519	0	1615
Q Serve(g_s), s	1.5	22.3	1.1	3.0	55.9	0.1	6.1	0.0	0.0	0.0	0.0	5.5
Cycle Q Clear(g_c), s	1.5	22.3	1.1	3.0	55.9	0.1	6.7	0.0	0.0	0.4	0.0	5.5
Prop In Lane	1.00		1.00	1.00		1.00	0.77		0.18	0.80		1.00
Lane Grp Cap(c), veh/h	42	2749	856	62	2807	874	477	0	0	519	0	492
V/C Ratio(X)	0.57	0.55	0.04	0.77	0.95	0.00	0.23	0.00	0.00	0.02	0.00	0.21
Avail Cap(c_a), veh/h	79	2749	856	80	2807	874	477	0	0	519	0	492
HCM Platoon Ratio	1.00	1.00	1.00	1.00	1.00	1.00	1.00	1.00	1.00	1.00	1.00	1.00
Upstream Filter(I)	1.00	1.00	1.00	1.00	1.00	1.00	1.00	0.00	0.00	1.00	0.00	1.00
Uniform Delay (d), s/veh	55.6	17.9	12.9	55.1	24.9	12.1	30.1	0.0	0.0	28.0	0.0	29.7
Incr Delay (d2), s/veh	4.4	0.8	0.1	21.4	8.9	0.0	1.1	0.0	0.0	0.1	0.0	1.0
Initial Q Delay(d3),s/veh	0.0	0.0	0.0	0.0	0.0	0.0	0.0	0.0	0.0	0.0	0.0	0.0
%ile BackOfQ(50%),veh/ln	0.8	10.7	0.5	1.9	28.7	0.0	2.8	0.0	0.0	0.2	0.0	2.6
LnGrp Delay(d),s/veh	60.0	18.7	13.0	76.5	33.8	12.1	31.2	0.0	0.0	28.0	0.0	30.7
LnGrp LOS	E	B	B	E	C	B	C			C		C
Approach Vol, veh/h		1569			2720			109			114	
Approach Delay, s/veh		19.2			34.6			31.2			30.5	
Approach LOS		B			C			C			C	

Timer	1	2	3	4	5	6	7	8
Assigned Phs	1	2		4	5	6		8
Phs Duration (G+Y+Rc), s	8.1	66.8		40.1	6.9	68.0		40.1
Change Period (Y+Rc), s	* 4.2	5.8		5.1	* 4.2	5.8		5.1
Max Green Setting (Gmax), s	* 5.1	59.8		35.0	* 5	59.9		35.0
Max Q Clear Time (g_c+I1), s	5.0	24.3		7.5	3.5	57.9		8.7
Green Ext Time (p_c), s	0.0	30.8		0.6	0.0	1.9		0.6

Intersection Summary	
HCM 2010 Ctrl Delay	29.0
HCM 2010 LOS	C

Notes

Movement	WBL	WBR	NBT	NBR	SBL	SBT
Lane Configurations						
Traffic Volume (veh/h)	41	14	1011	51	16	2045
Future Volume (veh/h)	41	14	1011	51	16	2045
Number	3	18	2	12	1	6
Initial Q (Qb), veh	0	0	0	0	0	0
Ped-Bike Adj(A_pbT)	1.00	1.00		1.00	1.00	
Parking Bus, Adj	1.00	1.00	1.00	1.00	1.00	1.00
Adj Sat Flow, veh/h/ln	1900	1900	1900	1900	1900	1900
Adj Flow Rate, veh/h	53	18	1313	66	21	2656
Adj No. of Lanes	1	1	2	0	1	2
Peak Hour Factor	0.77	0.77	0.77	0.77	0.77	0.77
Percent Heavy Veh, %	0	0	0	0	0	0
Cap, veh/h	167	149	2513	126	41	2844
Arrive On Green	0.09	0.09	0.72	0.72	0.02	0.79
Sat Flow, veh/h	1810	1615	3593	176	1810	3705
Grp Volume(v), veh/h	53	18	677	702	21	2656
Grp Sat Flow(s),veh/h/ln	1810	1615	1805	1869	1810	1805
Q Serve(g_s), s	2.5	0.9	15.2	15.3	1.0	53.2
Cycle Q Clear(g_c), s	2.5	0.9	15.2	15.3	1.0	53.2
Prop In Lane	1.00	1.00		0.09	1.00	
Lane Grp Cap(c), veh/h	167	149	1297	1343	41	2844
V/C Ratio(X)	0.32	0.12	0.52	0.52	0.51	0.93
Avail Cap(c_a), veh/h	201	179	1297	1343	105	2844
HCM Platoon Ratio	1.00	1.00	1.00	1.00	1.00	1.00
Upstream Filter(I)	1.00	1.00	1.00	1.00	0.09	0.09
Uniform Delay (d), s/veh	38.2	37.5	5.7	5.7	43.5	7.7
Incr Delay (d2), s/veh	0.4	0.1	1.5	1.5	0.3	0.8
Initial Q Delay(d3),s/veh	0.0	0.0	0.0	0.0	0.0	0.0
%ile BackOfQ(50%),veh/ln	1.3	0.4	8.1	8.4	0.5	25.8
LnGrp Delay(d),s/veh	38.6	37.6	7.2	7.2	43.8	8.5
LnGrp LOS	D	D	A	A	D	A
Approach Vol, veh/h	71		1379			2677
Approach Delay, s/veh	38.4		7.2			8.7
Approach LOS	D		A			A

Timer	1	2	3	4	5	6	7	8
Assigned Phs	1	2				6		8
Phs Duration (G+Y+Rc), s	6.2	70.9				77.1		12.9
Change Period (Y+Rc), s *	4.2	6.2				6.2		4.6
Max Green Setting (Gmax), s	5.3	59.8				69.2		10.0
Max Q Clear Time (g_c+I1), s	3.0	17.3				55.2		4.5
Green Ext Time (p_c), s	0.0	34.7				13.0		0.0

Intersection Summary	
HCM 2010 Ctrl Delay	8.7
HCM 2010 LOS	A

Notes

Movement	EBL	EBT	EBR	WBL	WBT	WBR	NBL	NBT	NBR	SBL	SBT	SBR
Lane Configurations												
Traffic Volume (veh/h)	717	488	112	19	863	37	168	205	27	63	238	1268
Future Volume (veh/h)	717	488	112	19	863	37	168	205	27	63	238	1268
Number	5	2	12	1	6	16	3	8	18	7	4	14
Initial Q (Qb), veh	0	0	0	0	0	0	0	0	0	0	0	0
Ped-Bike Adj(A_pbT)	1.00		1.00	1.00		1.00	1.00		1.00	1.00		1.00
Parking Bus, Adj	1.00	1.00	1.00	1.00	1.00	1.00	1.00	1.00	1.00	1.00	1.00	1.00
Adj Sat Flow, veh/h/ln	1900	1900	1900	1900	1900	1900	1900	1900	1900	1900	1900	1900
Adj Flow Rate, veh/h	874	595	128	23	1052	34	205	250	23	77	290	1463
Adj No. of Lanes	2	3	1	1	3	0	2	2	1	1	2	1
Peak Hour Factor	0.82	0.82	0.82	0.82	0.82	0.82	0.82	0.82	0.82	0.82	0.82	0.82
Percent Heavy Veh, %	0	0	0	0	0	0	0	0	0	0	0	0
Cap, veh/h	1752	4012	1249	40	1463	47	170	1065	476	97	1023	1264
Arrive On Green	0.50	0.77	0.77	0.02	0.28	0.28	0.05	0.30	0.30	0.05	0.28	0.28
Sat Flow, veh/h	3510	5187	1615	1810	5162	167	3510	3610	1613	1810	3610	1615
Grp Volume(v), veh/h	874	595	128	23	705	381	205	250	23	77	290	1463
Grp Sat Flow(s),veh/h/ln	1755	1729	1615	1810	1729	1871	1755	1805	1613	1810	1805	1615
Q Serve(g_s), s	19.9	3.5	4.1	1.5	22.0	22.0	5.8	6.3	1.2	5.0	7.5	34.0
Cycle Q Clear(g_c), s	19.9	3.5	4.1	1.5	22.0	22.0	5.8	6.3	1.2	5.0	7.5	34.0
Prop In Lane	1.00		1.00	1.00		0.09	1.00		1.00	1.00		1.00
Lane Grp Cap(c), veh/h	1752	4012	1249	40	980	530	170	1065	476	97	1023	1264
V/C Ratio(X)	0.50	0.15	0.10	0.57	0.72	0.72	1.21	0.23	0.05	0.80	0.28	1.16
Avail Cap(c_a), veh/h	1752	4012	1249	86	980	530	170	1065	476	97	1023	1264
HCM Platoon Ratio	1.00	1.00	1.00	1.00	1.00	1.00	1.00	1.00	1.00	1.00	1.00	1.00
Upstream Filter(I)	1.00	1.00	1.00	1.00	1.00	1.00	1.00	1.00	1.00	1.00	1.00	1.00
Uniform Delay (d), s/veh	20.0	3.5	10.0	58.1	38.7	38.7	57.1	32.0	30.3	56.2	33.5	13.0
Incr Delay (d2), s/veh	0.1	0.1	0.2	4.6	4.5	8.2	136.1	0.5	0.2	33.7	0.7	80.2
Initial Q Delay(d3),s/veh	0.0	0.0	0.0	0.0	0.0	0.0	0.0	0.0	0.0	0.0	0.0	0.0
%ile BackOfQ(50%),veh/ln	9.6	1.7	1.8	0.8	11.1	12.5	6.0	3.2	0.6	3.4	3.8	42.0
LnGrp Delay(d),s/veh	20.1	3.6	10.2	62.7	43.2	46.9	193.2	32.6	30.4	89.9	34.2	93.2
LnGrp LOS	C	A	B	E	D	D	F	C	C	F	C	F
Approach Vol, veh/h		1597			1109			478			1830	
Approach Delay, s/veh		13.2			44.9			101.3			83.7	
Approach LOS		B			D			F			F	

Timer	1	2	3	4	5	6	7	8
Assigned Phs	1	2	3	4	5	6	7	8
Phs Duration (G+Y+Rc), s	6.9	98.6	11.2	40.2	65.7	39.8	10.6	40.8
Change Period (Y+Rc), s	* 4.2	5.8	5.4	* 6.2	5.8	* 5.8	* 4.2	5.4
Max Green Setting (Gmax), s	* 5.7	54.1	5.8	* 34	25.8	* 34	* 6.4	34.2
Max Q Clear Time (g_c+I1), s	3.5	6.1	7.8	36.0	21.9	24.0	7.0	8.3
Green Ext Time (p_c), s	0.0	4.8	0.0	0.0	1.1	3.2	0.0	1.3

Intersection Summary	
HCM 2010 Ctrl Delay	54.3
HCM 2010 LOS	D

Notes

APPENDIX 6.9:

OPENING YEAR CUMULATIVE (2020) WITHOUT PROJECT CONDITIONS OFF-RAMP QUEUING ANALYSIS WORKSHEETS WITH IMPROVEMENTS

This Page Intentionally Left Blank

1: I-215 SB On Ramp/I-215 SB Off Ramp & Harley Knox Blvd./Harley Knox. Blvd.

1/6/2016

Lane Group	EBT	EBR	WBL	WBT	SBL	SBT
Lane Group Flow (vph)	788	48	336	368	1660	408
v/c Ratio	0.85	0.11	0.87	0.25	0.92	0.41
Control Delay	53.1	7.2	58.2	26.0	36.9	4.8
Queue Delay	0.0	0.0	0.0	0.0	0.0	0.0
Total Delay	53.1	7.2	58.2	26.0	36.9	4.8
Queue Length 50th (ft)	309	0	143	116	587	29
Queue Length 95th (ft)	#412	24	#213	158	#721	87
Internal Link Dist (ft)	844			267		1109
Turn Bay Length (ft)		100	80			
Base Capacity (vph)	922	456	393	1456	1809	995
Starvation Cap Reductn	0	0	0	0	0	0
Spillback Cap Reductn	0	0	0	0	0	0
Storage Cap Reductn	0	0	0	0	0	0
Reduced v/c Ratio	0.85	0.11	0.85	0.25	0.92	0.41

Intersection Summary

95th percentile volume exceeds capacity, queue may be longer.
Queue shown is maximum after two cycles.

Lane Group	EBL	EBT	WBT	WBR	NBT	NBR
Lane Group Flow (vph)	503	2057	629	968	112	467
v/c Ratio	0.82	0.90	0.41	0.60	0.22	0.95
Control Delay	29.0	6.2	25.2	1.7	34.3	67.6
Queue Delay	0.8	0.9	0.0	0.0	0.0	0.0
Total Delay	29.8	7.1	25.2	1.7	34.3	67.6
Queue Length 50th (ft)	188	156	175	0	66	323
Queue Length 95th (ft)	m195	142	226	0	111	#503
Internal Link Dist (ft)		267	594		929	
Turn Bay Length (ft)	60			100		265
Base Capacity (vph)	714	2286	1548	1615	513	493
Starvation Cap Reductn	54	73	0	0	0	0
Spillback Cap Reductn	0	0	0	0	0	0
Storage Cap Reductn	0	0	0	0	0	0
Reduced v/c Ratio	0.76	0.93	0.41	0.60	0.22	0.95

Intersection Summary

95th percentile volume exceeds capacity, queue may be longer.
Queue shown is maximum after two cycles.

m Volume for 95th percentile queue is metered by upstream signal.

1: I-215 SB On Ramp/I-215 SB Off Ramp & Harley Knox Blvd./Harley Knox. Blvd.

6/28/2016

Lane Group	EBT	EBR	WBL	WBT	SBL	SBT
Lane Group Flow (vph)	810	150	777	231	953	359
v/c Ratio	0.71	0.27	0.89	0.11	0.87	0.48
Control Delay	41.1	18.2	22.3	2.6	48.4	5.5
Queue Delay	0.3	0.0	1.5	0.0	0.2	0.0
Total Delay	41.3	18.2	23.8	2.6	48.6	5.5
Queue Length 50th (ft)	300	44	277	24	351	2
Queue Length 95th (ft)	370	97	196	17	420	62
Internal Link Dist (ft)	844			267		1109
Turn Bay Length (ft)		100	80			
Base Capacity (vph)	1146	563	948	2178	1138	765
Starvation Cap Reductn	0	0	60	0	0	0
Spillback Cap Reductn	51	0	0	0	12	0
Storage Cap Reductn	0	0	0	0	0	0
Reduced v/c Ratio	0.74	0.27	0.88	0.11	0.85	0.47

Intersection Summary

Lane Group	EBL	EBT	WBT	WBR	NBT	NBR
Lane Group Flow (vph)	606	1240	996	1956	61	350
v/c Ratio	0.85	0.54	0.69	1.23	0.12	0.68
Control Delay	39.6	5.9	19.7	123.2	32.8	36.6
Queue Delay	4.7	2.3	1.4	0.0	0.0	0.0
Total Delay	44.3	8.2	21.1	123.2	32.8	36.6
Queue Length 50th (ft)	232	118	280	~987	35	187
Queue Length 95th (ft)	241	122	m302	m#925	65	265
Internal Link Dist (ft)		267	594		929	
Turn Bay Length (ft)	60			100		265
Base Capacity (vph)	831	2286	1442	1595	511	515
Starvation Cap Reductn	159	869	0	0	0	0
Spillback Cap Reductn	0	0	252	0	0	0
Storage Cap Reductn	0	0	0	0	0	0
Reduced v/c Ratio	0.90	0.88	0.84	1.23	0.12	0.68

Intersection Summary

~ Volume exceeds capacity, queue is theoretically infinite.
Queue shown is maximum after two cycles.

95th percentile volume exceeds capacity, queue may be longer.
Queue shown is maximum after two cycles.

m Volume for 95th percentile queue is metered by upstream signal.

APPENDIX 6.10:

OPENING YEAR CUMULATIVE (2020) WITH PROJECT CONDITIONS OFF-RAMP QUEUING ANALYSIS WORKSHEETS WITH IMPROVEMENTS

This Page Intentionally Left Blank

Lane Group	EBT	EBR	WBL	WBT	SBL	SBT
Lane Group Flow (vph)	788	48	344	368	1737	408
v/c Ratio	0.87	0.11	0.89	0.25	0.96	0.41
Control Delay	54.5	7.2	60.4	26.1	41.9	4.8
Queue Delay	0.0	0.0	0.0	0.0	0.2	0.0
Total Delay	54.5	7.2	60.4	26.1	42.1	4.8
Queue Length 50th (ft)	309	0	146	116	642	29
Queue Length 95th (ft)	#412	24	#221	158	#828	87
Internal Link Dist (ft)	844			267		1109
Turn Bay Length (ft)		100	80			
Base Capacity (vph)	907	450	393	1444	1809	995
Starvation Cap Reductn	0	0	0	0	0	0
Spillback Cap Reductn	0	0	0	0	4	0
Storage Cap Reductn	0	0	0	0	0	0
Reduced v/c Ratio	0.87	0.11	0.88	0.25	0.96	0.41

Intersection Summary

95th percentile volume exceeds capacity, queue may be longer.
Queue shown is maximum after two cycles.

Lane Group	EBL	EBT	WBT	WBR	NBT	NBR
Lane Group Flow (vph)	503	2138	637	989	112	476
v/c Ratio	0.82	0.94	0.41	0.61	0.22	0.97
Control Delay	28.9	7.6	25.3	1.7	34.3	71.4
Queue Delay	0.8	2.1	0.0	0.0	0.0	0.0
Total Delay	29.7	9.7	25.3	1.7	34.3	71.4
Queue Length 50th (ft)	186	158	177	0	66	333
Queue Length 95th (ft)	m190	144	228	0	111	#520
Internal Link Dist (ft)		267	594		929	
Turn Bay Length (ft)	60			100		265
Base Capacity (vph)	714	2286	1548	1615	513	493
Starvation Cap Reductn	54	72	0	0	0	0
Spillback Cap Reductn	0	0	0	0	0	0
Storage Cap Reductn	0	0	0	0	0	0
Reduced v/c Ratio	0.76	0.97	0.41	0.61	0.22	0.97

Intersection Summary

95th percentile volume exceeds capacity, queue may be longer.
Queue shown is maximum after two cycles.

m Volume for 95th percentile queue is metered by upstream signal.

1: I-215 SB On Ramp/I-215 SB Off Ramp & Harley Knox Blvd./Harley Knox. Blvd.

6/28/2016

Lane Group	EBT	EBR	WBL	WBT	SBL	SBT
Lane Group Flow (vph)	810	150	800	231	993	359
v/c Ratio	0.73	0.27	0.90	0.11	0.89	0.47
Control Delay	42.3	18.4	22.5	2.7	50.2	5.4
Queue Delay	0.3	0.0	2.1	0.0	0.4	0.0
Total Delay	42.6	18.4	24.7	2.7	50.6	5.4
Queue Length 50th (ft)	303	44	284	24	372	2
Queue Length 95th (ft)	370	97	199	16	444	62
Internal Link Dist (ft)	844			267		1109
Turn Bay Length (ft)		100	80			
Base Capacity (vph)	1114	549	948	2162	1138	765
Starvation Cap Reductn	0	0	62	0	0	0
Spillback Cap Reductn	50	0	0	0	15	0
Storage Cap Reductn	0	0	0	0	0	0
Reduced v/c Ratio	0.76	0.27	0.90	0.11	0.88	0.47

Intersection Summary

Lane Group	EBL	EBT	WBT	WBR	NBT	NBR
Lane Group Flow (vph)	606	1282	1020	2018	61	354
v/c Ratio	0.85	0.56	0.71	1.27	0.12	0.70
Control Delay	38.9	5.8	19.6	140.3	32.8	38.4
Queue Delay	4.7	3.1	1.8	0.0	0.0	0.0
Total Delay	43.6	8.8	21.4	140.3	32.8	38.4
Queue Length 50th (ft)	232	118	290	~1090	35	196
Queue Length 95th (ft)	240	122	m300	m#937	65	276
Internal Link Dist (ft)		267	594		929	
Turn Bay Length (ft)	60			100		265
Base Capacity (vph)	831	2286	1442	1595	511	509
Starvation Cap Reductn	159	869	0	0	0	0
Spillback Cap Reductn	0	0	255	0	0	0
Storage Cap Reductn	0	0	0	0	0	0
Reduced v/c Ratio	0.90	0.90	0.86	1.27	0.12	0.70

Intersection Summary

~ Volume exceeds capacity, queue is theoretically infinite.
Queue shown is maximum after two cycles.

95th percentile volume exceeds capacity, queue may be longer.
Queue shown is maximum after two cycles.

m Volume for 95th percentile queue is metered by upstream signal.