Leighton and Associates, Inc.
A LEIGHTON GROUP COMPANY

TRANSMITTAL

To: Highland Fairview Properties, LLC
14225 Corporate Way
Moreno Valley, California 92553

Date: March 23, 2012
Revised January 23, 2013
Project No. 111061-126

Attention: Mr. Wayne Peterson, Vice President of Community Planning

Transmitted:	The Following:	For:
X Herewith	___Draft Report	___Your Use
___Via Courier	X Final Report	X As Requested
___Client Pick Up	___Extra Report	
___Fed Ex	___Proposal	

Subject: Preliminary Geotechnical Evaluation for Environmental Impact Report, World Logistics Center Specific Plan, South of Highway 60 between Redlands Boulevard and Gilman Springs Road, City of Moreno Valley, California

LEIGHTON AND ASSOCIATES, INC.

By Simon Saiid/Robert F. Riha

Copies to: (3) Addressee and pdf on CD

41715 Enterprise Circle N. Suite 103 ■ Temecula CA 92590-5626
(951) 296-0530 ■ Fax (951) 296-0534 ■ www.leightongroup.com

PRELIMINARY GEOTECHNICAL EVALUATION FOR ENVIRONMENTAL IMPACT REPORT WORLD LOGISTICS CENTER SPECIFIC PLAN SOUTH OF HIGHWAY 60 BETWEEN REDLANDS BOULEVARD AND GILMAN SPRINGS ROAD CITY OF MORENO VALLEY, CALIFORNIA

Prepared For:

Highland Fairview Properties, LLC
14225 Corporate Way
Moreno Valley, California 92553

Project No. 111061-126

March 23, 2012
Revised January 23, 2013

Leighton and Associates, Inc.
A LEIGHTON GROUP COMPANY

Leighton and Associates, Inc.
A LEIGHTON GROUP COMPANY

March 23, 2012
Revised January 23, 2013

Project No. 111061-126

Highland Fairview Properties, LLC
14225 Corporate Way
Moreno Valley, California 92553

Attention: Mr. Wayne Peterson, Vice President of Community Planning

Subject: Preliminary Geotechnical Evaluation for Environmental Impact Report, "World Logistics Center Specific Plan", South of SR 60 between Redlands Boulevard and Gilman Springs Road, City of Moreno Valley, California

In accordance with your request and authorization, we are pleased to present this updated preliminary geotechnical evaluation for the "World Logistics Center" Specific Plan area located in the City of Moreno Valley, California. This revised report was prepared to incorporate review comments by City of Moreno Valley (See References). It is our opinion that the subject property is considered suitable for proposed development provided our recommendations included in this report are implemented during the various phases of site development. However, it should be anticipated that additional geotechnical studies may be required based on future site development plans to determine limits of fault zones in areas not previously explored, confirm structural setbacks from known fault zones, and verify/provide specific remedial earthwork and foundation design recommendations for individual buildings/lots.

If you have any questions regarding this report, please do not hesitate to contact this office. We appreciate this opportunity to be of service.

Respectfully submitted,
LEIGHTON AND ASSOCIATES, INC.

REGISTERED PROFESSIONAL ENGINEER SIMON I. SAIID No. 2641 Exp. GEOTECHNICAL STATE OF CALIFORNIA

Simon I. Saiid
GE 2641 (Exp. 09/30/13)
Principal Engineer

REGISTERED GEOLOGIST ROBERT F. RIHA No. 1921 CERTIFIED ENGINEERING GEOLOGIST STATE OF CALIFORNIA

Robert F. Riha
CEG 1921 (Exp. 02/28/14)
Vice President/ Principal Geologist

Distribution: (3) Addressee, pdf copy on CD

41715 Enterprise Circle N. Suite 103 ■ Temecula CA 92590-5626
(951) 296-0530 ■ Fax (951) 296-0534 ■ www.leightongroup.com

TABLE OF CONTENTS

Section Page

1.0 INTRODUCTION 1
1.1 Purpose and Scope 1
1.2 Previous Studies 1
1.3 Site Description 1
1.4 Proposed Development 3
2.0 FIELD EXPLORATIONS AND LABORATORY TESTING 4
2.1 Previous Field Explorations 4
2.2 Previous Laboratory Testing 4
3.0 SUMMARY OF GEOTECHNICAL CONDITIONS 5
3.1 Regional Geology 5
3.2 Site Geologic Units 5
3.2.1 Undocumented Fill 6
3.2.2 Topsoil 6
3.2.3 Alluvium 6
3.2.4 Landslide Materials 7
3.2.5 San Timoteo Formation 8
3.2.6 Granitic Bedrock 8
3.3 Surface Water and Groundwater 8
4.0 FAULTING AND SEISMICITY 9
4.1 Regional Faulting and Fault Activity 9
4.2 Local Faulting and Fault Activity 10
4.3 Seismic Design Parameters 12
4.4 Secondary Seismic Hazards 13
4.4.1 Ground Rupture 13
4.4.2 Tsunamis and Seiches 14
4.4.3 Landsliding 14
4.4.4 Rock Falls 14
4.4.5 Ground Fissuring and Subsidence 14
4.4.6 Liquefaction 15
4.4.7 Seismic Densification 15
5.0 CONCLUSIONS 17
6.0 PRELIMINARY RECOMMENDATIONS 19
6.1 General Discussion/Remedial Grading 19
6.1.1 Fault Area Restrictions 19
6.2 General Earthwork Considerations 20
6.2.1 Structural Fills 20
6.2.2 Shrinkage and Subsidence 21
6.2.3 Import Soils 21
6.2.4 Trench Excavation and Backfill 22
6.3 Preliminary Foundation and Slab Design 23
6.3.1 Minimum Footing Dimensions and Embedment 23

6.3.2 Allowable Vertical Bearing 23
6.3.3 Interior Floor Slab Design 24
6.4 Settlement 24
6.4.1 Settlement from Building Loads 25
6.4.2 Dynamic Settlement 25
6.5 Footing Setback 25
6.6 Lateral Resistance and Earth Pressures for Retaining Wall Design 26
6.7 Site Soil Corrosivity 28
6.7.1 Ferrous Corrosivity 28
6.7.2 Sulfate Attack 29
6.7.3 Corrosivity Test Results 29
6.8 Slope Stability 30
6.8.1 Natural Drainage Slopes 30
6.9 Drainage 31
6.10 Preliminary Pavement Design Parameters 31
7.0 GEOTECHNICAL REVIEW 34
7.1 Plans and Specifications 34
7.2 Future Investigations 34
7.3 Construction Review 34
8.0 LIMITATIONS 36

Accompanying Figures, Tables, Plates and Appendices

Figures

Figure 1 – Site Location Map End of Text
Figure 2 – Regional Geologic Map End of Text
Figure 3 – Earthquake Fault Zone Map End of Text

Tables

Table 1 – 2010 CBC Seismic Coefficients
Table 2 – Wall Design Earth Pressures
Table 3 – Relationship between Soil Resistivity and Soil Corrosivity
Table 4 – Relationship between Sulfate Concentration and Sulfate Exposure
Table 5 – Results of Corrosivity Testing
Table 6 – Preliminary Asphalt Pavement Section Thickness

Plates

Plate 1 – Field Exploration Map In Pocket

Appendices

Appendix A – References
Appendix B – General Earthwork and Grading Specifications
Appendix C – ASFE, Information Regarding Geotechnical Engineering Studies

1.0 INTRODUCTION

1.1 Purpose and Scope

This preliminary geotechnical evaluation report presents the results of our review of the geotechnical constraints and opportunities associated with the World Logistics Center Specific Plan area generally located south of Highway 60 with Redlands Boulevard forming the western boundary and Gilman Springs the eastern boundary in the City of Moreno Valley, California (see Figure 1). The purpose of this report was to update our previous geotechnical and geologic findings and preliminary recommendations based on the revised specific plan area (Parsons Brinkerhoff, 2012). Additional site specific geologic and geotechnical studies may be needed when site development plans are prepared. Our scope of services for this report included the following:

- Review of provided site development plans, existing soils reports and relevant geologic maps (see References).
- A site reconnaissance on June 6, 2011 and February 7, 2012.
- Preparation of this illustrated report (6 copies) summarizing our findings, conclusions and recommendations.

1.2 Previous Studies

Leighton previously conducted several geotechnical and site specific fault studies for the overall specific plan area and adjacent sites (see References). These studies included a preliminary geotechnical investigation (Leighton, 2007a), supplemental fault investigation (Leighton, 2007b, 2012) and updated geotechnical report (Leighton, 2008c). A supplemental fault study is currently ongoing within the property between Theodore Street and Gilman Springs Road, north of Alessandro Road. Pertinent information and findings provided in these studies are referred to as necessary or included herein for ease of reference. In case of conflict, this report should supersede the conclusions and recommendations of previous referenced reports.

1.3 Site Description

The site is located in the eastern portion of the City of Moreno Valley, with a small portion located within an unincorporated area of Riverside County. The property is generally bounded by Gilman Springs Road on the east, Redlands

Boulevard on the west, SR-60/Eucalyptus Avenue on the north, and the San Jacinto Wildlife preserve on the south as depicted on the *Site Location Map* (Figure 1). The majority of the property has been utilized for various agricultural and farming purposes. Most roads traversing the site are paved; however, a few "dirt" roads, residential buildings and a San Diego Gas and Electric natural gas compressor station were visible during our site reconnaissance.

Gas lines from three major gas companies, namely Southern California Gas (SCG), San Diego Gas & Electric and Questar Line 90 transect the subject site. The SCG gas line is parallel to Cottonwood Avenue near Redlands Boulevard in the west, and parallel to Alessandro Boulevard near Gilman Springs Road in the east. This same gas line is also parallel to Virginia Road from Alessandro Boulevard in the north to the San Jacinto Wildlife area in the south. The gas line from Questar Line 90 is parallel to and about 600 feet south of Alessandro Boulevard up to Theodore Street, and is then along Alessandro Boulevard over to Gilman Springs Road. A water line also traverses the site, west to east along an easterly projection of Dracaea Avenue.

Topographically, the site generally slopes in a southeasterly direction towards the offsite historic Mystic Lake. The prominent Mount Russell is located near the southwest corner of the property with a high point elevation onsite of about 2,500 feet (msl). The maximum relief of site elevations between north and south sides is estimated to be 350 feet. Based on review of available maps, site elevations range from approximately 1,430 feet above mean sea level (msl) at the southeastern corner to approximately 1,780 feet (msl) at several prominent ridges along SR-60 near the off ramp to Gilman Springs Road. Four (4) distinct unnamed drainage channels transect the site in a general north-south direction. The easterly slopes of Mount Russell lie adjacent and partially within the southwest corner of the property. Vegetation on site generally consists of a minimal growth of annual weeds and grasses as well as selected dry farming crops. A few trees and local moderately thick native scrub vegetation exist near and within the existing drainages and non-farmed properties.

Access towers and irrigation pipelines were observed throughout the site, which are possibly related to past agricultural activities. Overhead and underground utility lines are present along the perimeter boundaries. The property north of Eucalyptus Ave. and south of SR-60 contains the Metropolitan Water District Inland Feeder Pipeline. A portion of this property was used as a staging area during construction of the Inland Feeder Riverside Badlands Tunnel from

October 1998 through July 2001 (Arabashi et al, 2003). The tunnel entry point is referred to as the Gilman Portal and contains a below ground outlet structure, associated access roads and fencing. A considerable stockpile of various soils, gravels and rock fragments is located west of the existing northwest to southeast drainage and Theodore Street. These materials are assumed to be spoils from the Inland Feeder tunnel and pipeline alignment construction.

Although no other significant structures were observed, some isolated minor structures and grading activities associated with past agricultural use should be expected. Such structures may include buried remnants of foundations, agricultural debris, pavements, and septic systems. Stockpiles of demolition debris and concrete rubble were also locally observed. Based on field observations, the adjacent properties are primarily used for residential and agricultural purposes and have similar topography.

1.4 Proposed Development

Based on information provided, we understand that cut and fill grading up to 50 feet may be required to create pads for commercial and industrial developments. It is also our understanding that large buildings/distribution centers are expected to consist of concrete tilt-up walls, a steel truss roof structures founded on conventional isolated pad and continuous perimeter wall footings with a slab on grade floor systems. Although structural loads are not known to us at this time, typical column loads are expected to range up to 125 kips and perimeter bearing wall loads are to range up to 6 kips per lineal foot.

The preliminary grading and foundation design recommendations presented in this report are for planning purposes and additional site investigations should be performed once site grading and foundation plans become available for individual building sites.

2.0 FIELD EXPLORATIONS AND LABORATORY TESTING

2.1 Previous Field Explorations

Our previous field explorations conducted for this site are as follows:

- Forty nine (49) exploratory borings (B-6 through B-54) were completed on November 12, 2007 through January 23, 2008. Results of field and laboratory testing are presented in our referenced report (Leighton, 2008c).
- Eighty (80) exploratory test pits (TP-1 through TP-80) were excavated on November 2007. Results of field and laboratory testing are presented in our referenced report (Leighton, 2007b).
- Seven (7) cone penetration tests (CPT-1 through CPT-7) extending to a maximum depth of approximately 80.5 feet below the existing ground surface were conducted in 2006. Detailed results including CPT logs are presented in our referenced report (Leighton, 2006).
- Subsurface fault studies were also performed by Leighton (2007a, 2004, 2012) which included twelve (12) fault trenches with a total length of 16,118 lineal feet (3.05 miles) ranging in depth from 18 to 40 feet.

Approximate locations of previous geotechnical borings, test pits, CPT soundings, and fault trenches are depicted on the *Field Exploration Map*, Plate 1. Work performed by others are also referenced in this report and shown on Plate 1.

2.2 Previous Laboratory Testing

Laboratory testing performed during our previous studies on representative samples included collapse and/or swell potential, expansion index, direct shear, gradation, in-situ moisture and density, maximum dry density and optimum moisture content, R-value, and soluble sulfate concentration, pH, chloride concentration and resistivity. As a part of this geotechnical evaluation, we reviewed pertinent laboratory testing performed during these previous investigations.

3.0 SUMMARY OF GEOTECHNICAL CONDITIONS

3.1 Regional Geology

The World Logistics Center project is located within the Peninsular Ranges Province, which is characterized by northwest trending elongated mountain ranges and valleys. The Peninsular Ranges Province is divided into three major fault bounded tectonic blocks within the San Andreas Fault System, which consist of (from west to east): Santa Ana, Perris, and San Jacinto Blocks. The site is situated near the northeastern boundary of the relatively stable Perris Block.

The Perris Block, approximately 20 miles by 50 miles in extent, is bounded by the San Jacinto Fault Zone to the northeast, the Elsinore Fault Zone to the southwest, the Cucamonga Fault Zone to the northwest and to the southeast by the poorly defined boundary of the Temecula Basin. The Perris Block has had a complex tectonic history in response to movement on the Elsinore and San Jacinto Fault Zones. Thin sedimentary and volcanic materials locally mantle the crystalline bedrock. Alluvial and colluvial deposits fill the lower valley areas.

The study area is located within the northern portion of the San Jacinto Valley, a fault-bounded tectonic basin that has evolved from movement along the San Jacinto fault system resulting in a down-dropped northwest-trending trough. The elongate transtensional basin is believed to have formed as a result of a right step of the fault zone between the Casa Loma and Claremont strands of the fault zone (Morton and Matti, 1993).

As mapped by the USGS (2006), the natural geologic units on the subject property include; various young alluvial deposits, older alluvial-fan deposits, landslide deposits, San Timoteo formation, and granitic bedrock, see the *Regional Geologic Map*, (Figure 2).

3.2 Site Geologic Units

The earth materials encountered or observed on site consist of undocumented fill, topsoil, alluvium, landslide materials, San Timoteo Formation and granitic bedrock. These units are discussed in the following sections in order of increasing age.

3.2.1 Undocumented Fill

Undocumented fills are related to grading activities to construct onsite access roads, Inland Feeder Pipeline, stockpiled fill materials, perimeter unimproved dirt roads, site agricultural leveling (drainage ditch backfill) and exploratory fault trenches (Leighton, 2004). The approximate location of the fault trenches are depicted on Plate 1. All undocumented fills are considered unsuitable for support of additional fill or structures or other planned improvements in their present condition. In areas where the planned grading will not remove the undocumented fill soils, they should be removed and recompacted in accordance with Section 6.1 of this report. Undocumented fill materials cleared of debris and significant organic materials are suitable for use as compacted fills. It should be noted that the most recent previous fault trenches were backfilled with compacted fill (Leighton, 2007a).

3.2.2 Topsoil

Topsoil is mantling the majority of the site (Leighton, 2007a). The thickness of the topsoil was generally uniform, and limited to the upper 12 to 18-inches of the existing ground surface. Topsoil generally consisted of yellow brown, silty sand, silty clay to sandy clay with scattered gravel sized clasts. There are abundant in-filled animal burrows (Krotovina) containing finer silt and sands. Topsoil includes recently tilled soil. Topsoil cleared of debris and significant organic materials is suitable for use as compacted fill.

3.2.3 Alluvium

Alluvial soil was encountered in all exploratory borings, fault trenches, and test pits excavated at the site. The alluvial soils were deposited as part of a complex depositional environment and generally include interbedded fine sands and silts with varying amounts of clay. The yellow-brown to medium gray recent alluvial soils (younger alluvium) are found in drainages and believed to constitute the upper surficial materials (upper 3 to 10 feet). The deeper materials (older alluvium and older fan-deposits) are generally dark yellow-brown to dark gray and consist of silty fine sand to sandy silt with interbedded lenses of silt clay. The alluvium along the southeastern side of the site is significantly denser and contains considerable amounts of coarser sands and gravel. Pertinent engineering characteristics of the encountered alluvium are summarized below:

- ***Compressibility Characteristics***: The alluvium is generally loose in the upper 10 to 15 feet in most areas with an average N-value on the order of 4 to 10. At depths greater than 15 feet, the alluvium is generally medium dense with an average N-value on the order of 10 to 30. Based on the results of our laboratory testing on representative samples, the coefficient of compressibility (Cc) is expected to vary significantly depending on depth and location. Typical Cc value ranging from 0.01 to 0.10 is calculated based on applied loads of 1 to 2 kips. However, higher Cc (0.15 to 0.25) can be encountered in localized areas such as in the vicinity of Boring B-14 at a depth of 25 feet. The results of our testing also indicate a high rebound potential during unloading for some of the tested alluvium. This rebound affect may cause some elevation rise in areas of significant excavation.
- ***Expansion Potential***: The results of the laboratory testing on representative samples indicate that the Expansion Index (EI) of the onsite soils is expected to vary from one location to another. The results indicate the presence of very low to high expansive soils (0<EI<131) in accordance with the classification of the California Building Code (CBC). However, the majority of the site materials are expected to have an EI of less than 51. The more expansive soils (EI>51) are expected to be localized and associated with interbedded silt and clay layers.
- ***Collapse Potential:*** The 'hydro-collapse' potential was evaluated in the laboratory on representative soil samples in accordance with the consolidation test procedure per ASTM D4546. The test specimens were inundated with water at confining pressures ranging from 1 or 2 kips per square-foot, approximating those pressures that may be exerted after completion of grading. The test results indicate that the potential for 'hydro-collapse' is generally lower than 5 percent (moderate trouble). However, higher collapse potential should be expected in localized areas and may range up to 9 percent as encountered in Borings B-8 and B-10.

3.2.4 Landslide Materials

A large older landslide has been mapped primarily offsite on the north easterly flanks of Mount Russell, near the southwest portion of the property (See Figure 2). The landslide appears to have originated on the

higher slopes (offsite) and moved northeast, partially onto the subject property. The majority of the landslide material is offsite and not affecting the planned development areas. If development is proposed in this area, additional study for determination of landslide stability or remedial measures such as buttressing or removal of slide debris may be required.

3.2.5 San Timoteo Formation

The Pleistocene aged San Timoteo Formation is observed in surface exposures in the northeastern portion of the property and encountered at depth in some of our exploratory borings B-6, B-7 and B-17 (Leighton, 2006). The San Timoteo Formation locally consists of poorly to moderately consolidated sands, silts, sandy gravels and gravel conglomerates. The non-porous, medium dense to dense San Timoteo formation materials are considered suitable to support additional fill or foundation loads.

3.2.6 Granitic Bedrock

The southwest elevated corner of the site (Mount Russell) is comprised of heterogeneous granitic bedrock. Several large boulders are visible on the easterly facing slopes that may be concern for rock fall hazard to development located west of Davis Road/Theodore Street. The location of these boulders relative to site development should be reviewed when development plans become available.

3.3 Surface Water and Groundwater

Surface water and groundwater was not observed or encountered up to the maximum explored depth of 81 feet. According to the Riverside County General Plan Safety Element (2003), depths of groundwater within the subject site are reported to be in excess of 100 feet below existing ground surface. Two deep test wells were constructed southeast of the subject site in August 1980 (Mann, 1991). These wells were drilled to depths of 1110 feet and 1350 feet below existing ground surface. Groundwater was reported at 106 feet in one of the wells. Groundwater is not anticipated to be a constraint during grading or future development. However, localized perched groundwater conditions may occur due to heavy rainfall or irrigation.

4.0 FAULTING AND SEISMICITY

4.1 Regional Faulting and Fault Activity

The subject site, like the rest of Southern California, is located within a seismically active region as a result of being located near the active margin between the North American and Pacific tectonic plates. The principal source of seismic activity is movement along the northwest-trending regional fault systems such as the San Andreas, San Jacinto, and Elsinore Fault Zones. Currently, these fault systems accommodate up to approximately 55 millimeters per year (mm/yr) of slip between the plates. The onsite San Jacinto Fault Zone is estimated to accommodate slip of approximately 12 mm/yr (WGCEP, 1995). However, geodetic measurements between 1973 and 1981 show that the San Jacinto and San Andreas Faults currently have comparable strain rates. King (1983) and Morton (1993) have estimated an average slip rate of as much as 20 mm/yr for the San Jacinto Fault. The San Jacinto Fault zone presents an appreciable seismic hazard in Southern California.

By definition of the California Geological Survey, an active fault is a fault, which has had surface displacement within Holocene time (about the last 11,000 years). This definition is used in delineating Earthquake Fault Zones as mandated by the Alquist-Priolo Geologic Hazards Zones Act of 1972 and as most recently revised in 2007 (Bryant, 2007) as the Alquist-Priolo Earthquake Fault Zoning Act and Earthquake Fault Zones. The intent of this act is to require fault investigations on sites located within Earthquake Fault Zones to assure that certain inhabited structures are not constructed across the traces of active faults.

The nearest Alquist-Priolo zoned “active faults” is the onsite Claremont Segment of the San Jacinto Fault Zone, (see Figure 3). The nearest offsite fault zones include: Casa Loma Segment of the San Jacinto Fault Zone, located 1.6 miles (2.5 km) to the south, the San Andreas Fault Zone, located 12.7 miles (20.5 km) northeast, and the Glen Ivy Segment of the Elsinore Fault is located approximately 22.7 miles (36.6 km) to the southwest of the site (Blake, 2000b and Bryant, 2007). Additionally, an un-named fault splay is mapped at the northwest property boundary, near the SR-60/Theodore Street interchange (see Plate 1).

4.2 Local Faulting and Fault Activity

Historically, the San Jacinto fault zone has produced earthquakes in the magnitude range of 6.2Mw to 7.2Mw ('Mw' is the Moment Magnitude as defined by the U.S.G.S). Of all the fault systems in California, the San Jacinto Fault and San Andreas Fault are among the most active. Since the recording of seismic events in the mid-19th century, at least 6 major earthquakes have occurred along the San Jacinto Fault Zone (Blake, 2000a). Each of these major quakes have produced moderate to severe damage to buildings and roads, and have resulted in several fatalities over this time-period (Von Hake, 1971). Hundreds of minor earthquakes (magnitude 1.0 to 2.9) occur annually in the San Jacinto Valley. The majority of these earthquakes occur in the bedrock underlying the alluvium unit typically at depths of 3 to 5 miles (5-8 km).

A table of major quakes (□6.0Mw) within 20 miles of the study area in the last 200 years, (Blake, 2000a) is presented in the following table.

Date	Moment Magnitude	Intensity	Distance from Study Area
1880	6.0 Mw	X	0.8 miles (1.3 km)
1923	6.25 Mw	IX	6.7 miles (10.7 km)
1899	6.4 Mw	VIII	14.2 miles (22.8 km)
1918	6.8 Mw	VIII	16.3 miles (26.2 km)

Evidence for recent (latest-prehistoric and possibly historic) fault ruptures have been identified within many trenches crossing the fault zone in other areas of the San Jacinto Valley (Kahle, 1987; Lohr, 1980; Lor, 1997; etc.). Observations of Holocene faulting exposed in exploratory trenches in the area indicate that evidence of active faulting extends upward to within roughly the upper eight feet of the modern ground surface. Given the relatively short recurrence interval of earthquakes and fault rupture for the San Jacinto Valley area fault zones, a reasonable conclusion is that frequent faulting may have resulted in a higher number of recent surface rupture events in this area. Faults and related geologic structures resulting from these events should therefore be more easily recognizable in younger near surface sedimentary deposits.

The site is located along the Claremont Segment and near the Casa Loma Segment of the San Jacinto Fault Zone. Data published by the Southern California Earthquake Center (SCEC, 2007); the Working Group of California Earthquake Probabilities, (WGCEP, 1995); the United States Geological Survey

(USGS, 2007); Katherine Kendrick, (Kendrick, 2005); and Dr. Tom Rockwell, (Rockwell, 2003); all suggest a 60 to 200 year recurrence interval between surface ruptures for fault segments within this portion of the San Jacinto Fault Zone. Earthquake activity within this fault zone occurs on a more frequent interval than many other active fault zones in Southern California.

For example, assuming a characteristic recurrence model and a conservative value of 200 years for the return time between rupture events, the onsite faults could experience approximately 10 faulting events during the Late Holocene time period (~2000 y.b.p.). Assuming not every earthquake event is large enough to generate surface ground rupture for the entire length of the fault segment, and that multiple fault splays may exist with each zone, we can further hypothesize that even if only every third of the events are sufficiently large and generates ruptures within the zone being addressed, one should still see faulting readily apparent in middle to late Holocene deposits, if they are within the active fault zone.

Based upon historical accounts of ground rupture during earthquakes in the San Jacinto/Moreno Valley area of 1899, 1916, and 1918, ground rupture is believed to occur at normal recurrence intervals which may not provide adequate time for erosion to conceal fault features. Carl A. Von Hake noted in, *Earthquake Information Bulletin, Volume 3, Number 2, March - April 1971*, that severe damage, and ground rupture/subsidence has occurred in association with the previously mentioned earthquakes on the San Jacinto Fault Zone.

The onsite Claremont Segment of the San Jacinto Fault Zone is considered to be an **active** fault which has evidence of displacement of Holocene soils. The eastern portion of the site is transected by an Earthquake Fault Zone (EFZ) as created by the Alquist-Priolo Earthquake Fault Zoning Act (Bryant, 2007). The western portion of the site is crossed by the City of Moreno Valley Seismic Zone and the postulated trace of the Casa Loma Fault (Dibblee, 1981, Park, 1995). A detailed fault investigation was performed by Leighton for the postulated extension of the Casa Loma fault and the associated City of Moreno Valley Seismic Zone (Leighton, 2004, 2007). The postulated Farm Road Strand (Park, 1995) was not encountered in our exploratory fault trench T-7 (Leighton, 2007a). During this fault study it was determined by Leighton and the City of Moreno Valley's consulting geologist that the postulated Farm Road Strand did not exist as previously interpreted (Leighton, 2007, Eberhart, 2007). This 30 to 40 foot deep exploratory trench was located south of and adjacent to Alessandro

Boulevard and east of Theodore Street at the postulated location of the Farm Road Strand (See Plate 1).

Although no active faulting was observed at the projection of the Casa Loma fault or postulated Farm Road Strand, some local discontinuous fracturing was observed and documented (Leighton 2004, 2007a, and 2012). It is Leighton's opinion that a "special foundation or grading remediation zone" for the areas supporting structures intended for human occupancy be created where co-seismic deformation is observed. This area should be determined after the conclusion of recommended subsurface evaluations and when building locations are being considered for planning purposes. California Code of Regulations, Section 3601 states, "A structure for human occupancy is any structure used or intended for supporting or sheltering any use of occupancy, which is expected to have a human occupancy rate of more than 2,000 person-hours per year". Additional fault study and structural setback determination should be anticipated. Specific remedial earthwork and foundation recommendations will need to be evaluated when development plans become available. Structures intended for human occupancy should **not** be located within any structural setback zone as determined by those studies.

4.3 Seismic Design Parameters

The nearest known active fault and source of the design earthquake is the San Jacinto Valley Segment (Claremont Segment) of the San Jacinto Fault located along the eastern boundary of the site. The effect of strong seismic shaking may be reduced to prevent structure failure by adhering to the 2010 California Building Code (CBC) and seismic design parameters suggested by the Structural Engineers Association of California.

Due to the large size of this project, we are providing below two sets of parameters: Area 1 generally represents the western portion of the site and Area 2 represents the eastern portion of the site. These parameters should give a general range for the seismic design coefficients expected on this site, which should be confirmed for each lot/building once site development plans become available.

Table 1. 2010 CBC Seismic Coefficients

CBC Categorization/Coefficient	Design Value (g)	
	Area 1 Lat: 33.9211 Long: 117.1556	Area 2 Lat: 33.9107 Long: 117.0936
Site Class (Table 1613.5.2) – D		
Mapped Spectral Response Acceleration at 0.2s Period, S_s	**1.86**	**1.96**
Mapped Spectral Response Acceleration at 1s Period, S_1	**0.71**	**0.76**
Short Period Site Coefficient at 0.2s Period, F_a	1.0	1.0
Long Period Site Coefficient at 1s Period, F_v	1.5	1.5
Adjusted Spectral Response Acceleration at 0.2s Period, S_{MS}	**1.86**	**1.96**
Adjusted Spectral Response Acceleration at 1s Period, S_{M1}	**1.06**	**1.14**
Design Spectral Response Acceleration at 0.2s Period, S_{DS}	**1.24**	**1.31**
Design Spectral Response Acceleration at 1s Period, S_{D1}	**0.71**	**0.76**

The above design values were calculated utilizing a software program published by United States Geological Survey (USGS) Department which follows the procedures stated in American Society of Civil Engineers (ASCE) Publication ASCE 7-05 and CBC Chapter 16, Section 1613. Site-specific response spectrum should be performed if buildings are to be located within the mapped AP Zone.

4.4 Secondary Seismic Hazards

Secondary hazards generally associated with severe ground shaking during an earthquake are ground rupture, tsunamis and seiches, landsliding, rockfalls, ground fissuring and subsidence, liquefaction, and seismic densification. These hazards are discussed in the following sections.

4.4.1 Ground Rupture

Ground rupture is generally considered most likely to occur along pre-existing active (Holocene) faults. Our review of previous investigations and data gathered during the previous fault trenching investigation has identified through-going recent (Holocene) faults near the eastern boundary. As such, the potential for site ground rupture along this fault zone is considered high and structural setbacks are recommended and lifeline utilities that cross the fault zones should be evaluated for the effects caused by possible ground rupture.

4.4.2 Tsunamis and Seiches

Due to the distance to large bodies of water (inland seas, large rivers, and oceans) from the site, the possibility of tsunamis is considered nil. An examination of ridge top elevations surrounding Perris Lake compared to the current elevation of the lake reveals that there is little likelihood that seiches from Perris Lake could overcome these observed ridge top elevations. The ephemeral Mystic Lake is projected to be approximately 70 feet below the south project boundary (low point). Seiches on Mystic Lake to affect this site are considered unlikely.

4.4.3 Landsliding

Landslides have been previously mapped by others and identified by us during our field investigation within the property. This large bedrock landslide exists, primarily offsite on the north eastern flank of Mount Russel (see Figure 2). This landslide complex is not anticipated to impact this development as currently planned, however, additional review should be performed if development is planned for this vicinity. Land sliding within the low lying portions of the property due to seismic activity is not anticipated within the site due to the flat-lying nature of the site and the anticipated design grades.

4.4.4 Rock Falls

The steep sloping hillsides in the area located generally southeast of the intersection of Theodore Street and Alessandro Boulevard, southwest corner of the World Logistics Center project contains many potentially loose boulders. The potential for rock fall due to either erosion or seismic ground shaking is considered high in this area. Remedial measures such as rock removal, anchoring, catchment areas, rock fences, or setbacks may be required if development is planned along these slopes. The potential hazard from individual rocks should be assessed as site development plans are provided.

4.4.5 Ground Fissuring and Subsidence

No evidence of recent ground fissuring was observed or been reported within the project boundary, or projecting into the property from immediately adjacent properties. Regional subsidence was reported in various areas of San Jacinto Valley as a result of ground water withdrawal and regional tectonics (Morton, 1994). Subsidence and resulting ground

fissuring is documented approximately 6,600 feet south of the site (Figure 3). Localized discontinuous subsurface features likely related to past historic ground shaking or liquefaction events were observed (Leighton, 2004, 2007a and 2012) and discussed in Section 4.2 of this report.

4.4.6 Liquefaction

Liquefaction of cohesionless soils or soils of low plasticity can be caused by strong vibratory motion due to earthquakes. Research and historical data indicate that loose granular soils or soils of low plasticity below a near surface groundwater table are most susceptible to liquefaction. Liquefaction is characterized by a loss of shear strength in the affected soil layers, thereby causing the soil to flow as a viscous fluid. This effect may be manifested at the ground surface by settlement and/or sand boils. In order for the potential effects of liquefaction to be manifested at the ground surface, the soils generally have to be granular or of low plasticity, loose to medium dense, saturated relatively near the ground surface and must be subjected to a sufficient magnitude and duration of ground shaking.

Groundwater was not encountered during this or our past subsurface explorations on this site to a maximum depth of 81 feet. The subject site is not within a liquefaction hazard zone (Riverside County, 2003). Groundwater within the subject site is reported to be in excess of 100 feet below existing ground surface (see Section 3.3). Due to deep groundwater, relatively dense alluvial soils and interbedded clay layers underlying the site, it is our opinion that potential for liquefaction at the subject site is very low.

4.4.7 Seismic Densification

Ground accelerations generated from a seismic event can produce settlements in dry or moist sands (granular earth materials) with relative low density. We anticipate that the near-surface loose soil deposits susceptible to such seismically induced settlement will be removed and recompacted during grading. The potential total seismic densification is anticipated to be on the order of 1 inch. Due to relatively homogenous subsurface conditions (alluvial deposits in the upper 35 to 50 feet) the differential settlement is expected to be less than ½ inch over 40 lateral feet, provided that the recommendations for remedial grading (see Section

6.1.1) are adhered to. Additional evaluation of seismic densification during future site development plan reviews are recommended

5.0 CONCLUSIONS

Based on the results of this preliminary geotechnical evaluation, it is our opinion that the planned site development is feasible from a geotechnical standpoint. The following is a summary of the major geotechnical constraints or opportunities that may affect site development:

- The existing onsite soils are generally suitable for reuse as fill during proposed grading provided they are free of organic material and debris. If encountered, the medium to high expansive soils (51<EI<131) should not generally be placed within the upper 5 feet of finished grades.
- The results of our testing indicate a high rebound potential during unloading for some of the tested alluvium. This rebound affect may cause some elevation rise in areas of significant excavation.
- Undocumented fills and the upper low density alluvium are potentially compressible and should be removed and recompacted prior to construction of settlement-sensitive structures. Depth of removal will generally depend on type of structure and/or footing size and loads. Where high collapse potential exist (>5%) percent, deeper removal and/or special ground improvements techniques may be required.
- All loosely placed exploratory fault trench backfill should be removed and recompacted in accordance with the recommendations in Section 6.1. The approximate locations of the trenches are depicted on the *Field Exploration Map* (Plate 1). Trenches excavated as part of Leighton's work (Leighton 2007a, 2012) have been backfilled with properly compacted fill and will not require re-excavation and compaction. Previously excavated trenches will require removal and recompaction.
- Due to the variable nature of site alluvial soils, cut slopes in excess of 5 feet in vertical height should be constructed as replacement fill slopes.
- The onsite earth materials can be generally excavated with heavy-duty conventional grading equipment in good working condition.
- Evidence of active faulting has been identified along the eastern boundary and structural setbacks have been recommended. The limit of recommended preliminary fault setback zone based on recent fault trenching is presented on the accompanying *Field Exploration Map* (Plate 1). This structural setback may vary pending future studies and cut or fill thickness near the fault zone.

- Structural setbacks from the edges of the unnamed drainages that are to remain in their natural state should also be considered. When the project plans are further developed, the design and natural slopes adjacent to structural improvements should be evaluated by Leighton.
- Where co-seismic deformation (fractures) as observed in the previous exploratory trenches (Leighton, 2004, 2007a) specific remedial grading and foundation recommendations will need to be evaluated when development plans become available.
- The onsite soils possess a very low to high expansion potential and negligible sulfate exposure to concrete. Limited laboratory test data also show that the onsite soils may have a mild to moderate corrosion potential for buried metal improvements.
- Strong ground shaking and settlement (seismic densification) may occur at this site due to local earthquake activity. Additional evaluations of seismically induced settlement should be performed when grading and development plans become available.
- Groundwater was not encountered up to the maximum explored depth of 81 feet during our site investigations. Shallow groundwater is not expected to be a factor during site grading.
- Perched water may develop in areas of soils with contrasting permeability's, possibly resulting in saturated fills or seepage from slopes. This condition is often a result of site water use and irrigation practices.
- Fill slopes are anticipated for the proposed development. Unprotected slope faces will be susceptible to erosion. This risk may be reduced by planting the slopes as soon as possible after grading, and by maintaining proper erosion control measures.

6.0 PRELIMINARY RECOMMENDATIONS

6.1 General Discussion/Remedial Grading

The proposed development of this site appears feasible from a geotechnical viewpoint. The presence of relatively compressible and locally expansive alluvium is a major geotechnical concern on this site. One of the most practical and cost effective methods to mitigate the loose/compressible alluvium is the removal and recompaction of the compressible materials prior to construction of structural improvements. For planning purposes, we anticipate overexcavation and recompaction of the upper 5 to 10 feet of alluvium beneath all settlement-sensitive structures/heavy foundations to reduce the potential for excessive differential settlement. The overexcavation may extend to a depth of 15 to 20 feet in areas where high collapse potential (>5%) or coseismic deformation is encountered. Moreover, due to the presence of potentially expansive soils on this site, selective grading procedures should be anticipated in certain areas to ensure that expansive soil is not placed within 5 feet of finish grades. The depth of removal/over-excavation is expected to be shallower (2 to 5 feet) below pavement and in hardscape areas.

Due to the limited nature of our investigations and the variable soils conditions encountered, the recommendations included below are considered preliminary. Building specific investigations will be needed to further delineate the extent of the compressible and expansive alluvium on individual pads so that differential settlement can be further verified or evaluated in view of the actual foundation plan and imposed fill or structural loads.

Active faulting has been identified onsite and preliminary fault setback zones have been provided (see Plate 1). Additional fault studies may be needed if structures are planned adjacent to the “preliminary setback zones” or other areas within the State Earthquake Fault Zone or other mapped faults.

6.1.1 Fault Area Restrictions

The location of the surface projection of the onsite active faults or limits of significant fault zones exposed in our exploratory trenches were surveyed by the project civil engineer at the time of our investigation (Leighton 2007a). Based on the distance between our exploratory trenches and understanding of onsite faulting, we preliminarily recommend a 100-foot setback on either side of the encountered fault zone at each trench, as

projected between trenches T-8 through T-10 and as shown on the accompanying *Field Exploration Map* (Plate 1).

The faults encountered within the fault setback zone have a dipping component and cut or fill grading which significantly changes the present grades will shift the fault setback zones. The preliminary fault setback zone presented on the *Field Exploration Map (*Plate 1) is simply plotted as a setback from the mapped and surveyed fault zone without adjustment due to overlying cuts or fills. The preliminary fault setback zones should be refined as the grading concept is developed and the scale of plan is increased (i.e. 100-scale minimum).

6.2 General Earthwork Considerations

For planning purposes, earthwork should be performed in accordance with the General Earthwork and Grading Specifications in Appendix B and the following preliminary recommendations below. The recommendations contained in Appendix B are general grading specifications provided for typical grading projects and some of the recommendations may not be strictly applicable to this project. We anticipate that the findings of the recommended additional subsurface investigations may require modification to the recommendations presented herein.

6.2.1 Structural Fills

The onsite soils are generally suitable for reuse as compacted fill, provided they are free of organic materials, debris and oversize materials (greater than 8 inches in greatest dimension). The optimum lift thickness to produce a uniformly compacted fill will depend on the type and size of compaction equipment used. In general, fill should be placed in uniform lifts not exceeding 8 inches in thickness. Fill soils should be placed and compacted to a minimum 90 percent relative compaction (as determined by ASTM Test Method D1557). The compacted soil should be at or near optimum moisture content (±2 percent or depending on the prevailing soil material). If required per project requirements, the upper 12 inches of subgrade for floor slab should be compacted to a minimum 95 percent relative compaction.

The outer portion of fill slopes should be either overbuilt by 2 feet (minimum) and trimmed back to the finished slope configuration or

compacted in vertical increments of 5 feet (maximum) by a sheepsfoot roller as the fill is placed. The slope face should then be trackwalked by dozers of appropriate weight to achieve the final configuration and compaction out to the slope face.

Placement and compaction of fill should be performed in accordance with the City of Moreno Valley Grading Ordinance under the fulltime observation and testing of the geotechnical consultant.

6.2.2 Shrinkage and Subsidence

The volume change of excavated onsite materials upon recompaction is expected to vary with materials, density, insitu moisture content, location and compaction effort. The in-place and compacted densities of soil materials vary and accurate overall determination of shrinkage is difficult to estimate. Therefore, we recommend that site grading include, if possible, a balance area or ability to adjust import or export quantities to accommodate some variation.

For planning purposes, we recommend that the following shrinkage factors be applied:

Depth	Shrinkage (%)
0 to 1 feet	25 to 35
1 to 5 feet	18 to 22
5 to 10 feet	14 to 18
10 to 30 feet	8 to 14

In addition, due to the past and recent agricultural discing of the surface soils, a subsidence value of 0.2 to 0.4 feet should be applied to the existing topographic surface elevations and 0.1 to 0.2 feet to other non-disked areas. In addition, a subsidence factor of 0.10 feet should be applied to the soils below the removal bottoms due to recompaction and surcharging.

6.2.3 Import Soils

If import soils are needed to establish the site design elevations, it should be granular in nature, relatively free of organic material, have an expansion index less than 51 (per ASTM Test Method D4829), and have a low corrosion impact to the proposed improvements. Import soils, if

needed, and potential borrow sites should be evaluated by the geotechnical consultant prior to being imported to the site.

6.2.4 Trench Excavation and Backfill

Utility trenches should be backfilled with compacted fill in accordance with the *Standard Specifications for Public Works Construction*, ("Greenbook"), 2012 Edition. Fill material should be placed in lifts not exceeding 8 inches in uncompacted thickness and should be compacted to at least 90 percent relative compaction (ASTM D 1557). The upper 6 inches of backfill in all pavement areas should be compacted to at least 95 percent relative compaction.

Where granular backfill is used in utility trenches adjacent to moisture sensitive subgrades and foundation soils, we recommend that a cut-off "plug" of impermeable material be placed in these trenches at the perimeter of buildings, and at pavement edges adjacent to irrigated landscaped areas. A "plug" can consist of a 5-foot long section of clayey soils with more than 35-percent passing the No. 200 sieve, or a Controlled Low Strength Material (CLSM) consisting of one sack of Portland-cement plus one sack of bentonite per cubic-yard of sand. CLSM should generally conform to Section 201-6 of the Greenbook. The CLSM plug is intended to reduce the likelihood of water migrating from landscaped areas along permeable trench backfill into the building and pavement subgrades, resulting in wetting of moisture sensitive subgrade earth materials under buildings and pavements.

Excavation of utility trenches should be performed in accordance with the project plans, specifications and the *California Construction Safety Orders* (2010 Edition or more current). The contractor must be responsible for providing a "competent person" as defined in Article 6 of the *California Construction Safety Orders*. Contractors should be advised that sandy soils (such as fills generated from the onsite alluvium) could make excavations particularly unsafe. All safety precautions should be properly implemented at all times. In addition, excavations at or near the toe of slopes and/or parallel to slopes may be highly unstable due to the increased driving force and load on the trench wall. Spoil piles from the excavation(s) and construction equipment should be kept away from the

sides of the trenches. Leighton does not consult in the area of safety engineering.

6.3 Preliminary Foundation and Slab Design

6.3.1 Minimum Footing Dimensions and Embedment

Based on the results of our previous investigations, it is our opinion that the proposed commercial/industrial buildings may be supported on conventional (continuous) footings or isolated spread/pad footings with slab on grade. Foundations and slabs should be designed in accordance with structural considerations and the soils design recommendations presented below.

Footings should be embedded at least 18-inches below lowest adjacent grades. Footing embedments are measured from lowest adjacent finished grade, considered as the top of interior slabs-on-grade or the finished exterior grade, excluding landscape, whichever is lower. Footings located adjacent to utility trenches or vaults should be embedded below an imaginary 1:1 (horizontal to vertical) plane projected upward and outward from the bottom edge of the trench or vault towards the footing. Continuous/strip footings should have a minimum width of 18-inches, while column footings should have a minimum width of 24-inches. Upon the completion of the grading and structural plans, the geotechnical engineer should review the foundation loads and embedment in order to confirm the implementation of the recommendations herein. All footing excavations should be observed by geotechnical engineer before reinforcing steel is placed.

6.3.2 Allowable Vertical Bearing

The shallow foundation recommendations herein assume low expansive soil (EI <51). Foundations designed on soils of Expansion Index (EI) of 51 or greater shall require special design consideration. In accordance with the above footing dimensions and embedment, isolated pad footings (for column loads) and continuous/strip footings may be designed using an allowable bearing capacity of 2,000 psf. The bearing pressure value may be increased by 250 psf for each additional foot of embedment and each additional foot of width to a maximum vertical bearing value of 2,500 psf. These bearing values may be increased by one-third when considering

short-term seismic or wind loads. A sliding coefficient friction of 0.35 should be applied to the design of foundation elements.

Conventional footings/slab may be enhanced by structurally tying the slabs-on-grade to the perimeter and interior footings as designed by the project Structural Engineer. Continuous footings should be designed in accordance with the structural engineer requirements and should have a minimum reinforcement of four No. 5 reinforcing bars (two top and two bottom). Reinforcement of isolated footings should be per the structural engineer's design.

6.3.3 Interior Floor Slab Design

Slab-on-grade floors utilized with conventional foundations should be designed with a minimum thickness as indicated by the project structural engineer consistent with a modulus of subgrade reaction of 150 pounds-per-square-inch per inch (pci) and reinforced in accordance with the structural engineer's recommendations. A slip-sheet or equivalent should be used if crack-sensitive floor coverings (such as ceramic tiles, etc.) are to be placed directly on the concrete slab-on-grade.

It has been a standard of care in this locality to install a moisture retarder (2 inches of sand over an impermeable membrane over an additional 2 inches of sand) underneath all slabs where moisture condensation is undesirable. Moisture vapor retarders may retard but not totally eliminate moisture vapor movement from the underlying soils up through the slabs. Moisture vapor transmission may be additionally reduced by use of concrete additives. It is our opinion that the proposed vapor retarder system be designed or approved by the architect or entire design team including concrete subcontractors and manufacturers of floor coverings.

6.4 Settlement

Settlement of onsite fill materials is expected to occur during and within 90 days following fill placement. However, following the placement of fill and construction of structures, additional settlement may occur due to: (a) new footing/foundation loads, (b) compression within the fill due to the effects of landscaping irrigation, (c) compression of the left-in-place alluvial soils, and (d) dynamic settlements below the removal depths. The settlements below are general estimates/guidelines and

should be further verified based on actual structural loads/footing size and additional subsurface investigation performed for individual buildings.

6.4.1 Settlement from Building Loads

Settlement resulting from buildings located on compacted fill soils (minimum 90 percent relative compaction) is not expected to be significant and is estimated to be less than 2 inches (total) and ½ inch (differential) in 30 feet or the least dimension of the building, whichever is a greater distortion. The majority of settlement associated with building loads is anticipated to occur during construction as the load is applied. These settlements and angular distortions are for imposed building loads and do not include compression within the fill itself, underlying alluvium nor dynamic settlements.

6.4.2 Dynamic Settlement

The earth materials onsite may undergo significant earthquake-induced settlement during the design seismic event. To reduce the effects and magnitude of the earthquake-induced settlements, remedial grading is recommended (see Section 6.1). Following remedial grading, differential dynamic settlements are anticipated be on the order of ½ inch over 40 lateral feet as a result of the design basis earthquake.

6.5 Footing Setback

We recommend a minimum horizontal setback distance from the face of slopes for all structural footings (retaining and decorative walls, building footings, etc.). This distance is measured from the outside bottom edge of the footing horizontally to the slope face (or to the face of a retaining wall) and should be a minimum of H/2, where H is the slope height (in feet). The setback should not be less than 7 feet and need not be greater than 10 feet.

Note that the soils within the structural setback area possess poor lateral stability and improvements (such as retaining walls, sidewalks, fences, pavements, etc.) constructed within this setback area may be subject to lateral movement and/or differential settlement. Potential distress to such improvements may be mitigated by providing a deepened footing or a pier and grade-beam foundation system to support the improvement. The deepened footing should meet the setback as described above.

6.6 Lateral Resistance and Earth Pressures for Retaining Wall Design

For preliminary design purposes, the lateral earth pressure values for level or sloping backfill are recommended for retaining walls (loading dock walls) backfilled with onsite and/or import soils of low expansion potential (expansion potential less than 50 per ASTM Test Method D4829). Where applicable, basement walls or cantilever retaining walls (less than 12 feet in height) should be designed for lateral earth pressures as described in this section. The magnitude of these pressures depends on the amount that the wall can yield horizontally under load. If the wall can yield enough to mobilize full shear strength of backfill soils, then the wall can be designed for "active" pressure. If the wall cannot yield under the applied load, the shear strength of the soil cannot be mobilized and the earth pressure will be higher. Such walls should be designed for "at rest" conditions. If a structure moves toward the soils, the resulting resistance developed by the soil is the "passive" resistance. Retaining walls should be designed using the following equivalent fluid pressures:

Table 2. Wall Design Earth Pressures (Static, Drained Conditions)

Loading Conditions	Equivalent Fluid Density (pcf) For Level Backfill*	Equivalent Fluid Density (pcf) For 2H:1V Backfill*
Active*	35	50
At-Rest*	50	75
Passive**	300	300

*For low-expansive backfill, only.
** Maximum passive pressure not to exceed 3,000 psf at depth.

Foundations placed in properly compacted fill soils may be designed using a coefficient of friction of 0.35 (total frictional resistance equals coefficient of friction [concrete on soil] times the dead load). A design passive resistance value of 250 psf per foot of depth (with a maximum lateral passive value of 2,500 psf) may be used. The allowable lateral resistance can be taken as the sum of the frictional resistance and the passive resistance provided the passive resistance does not exceed two-thirds of the total allowable resistance. The total lateral resistance value may be increased by one-third when considering loads of short duration such as wind or seismic forces.

Unrestrained (yielding) cantilever walls should be designed for the active equivalent fluid weight value provided above for very low to low expansive soils

that are free draining. In the design of walls restrained from movement at the top (non-yielding) such as basement or elevator pit/utility vaults, the at-rest equivalent fluid weight value should be used. These equivalent fluid pressures do not include the effect of traffic or earthquake surcharges in the backfill. Accordingly, an increment of lateral earth pressure equal to $18H^2$ where H is the height of the wall, should be applied at a distance of 0.5 H above the toe of the wall. Under the combined effects of static and earthquake loads on the wall, a factor of safety between 1.1 and 1.2 is acceptable when evaluating the stability (sliding, overturning) of the wall (NAVFAC DM 7.2).

Should a sloping backfill other than a 2 to 1 (horizontal to vertical) be constructed above the wall (or a backfill is loaded by an adjacent surcharge load), the equivalent fluid weight values provided above should be evaluated on an individual case basis by the geotechnical engineer. All retaining wall structures should be provided with appropriate drainage and waterproofing. The outlet pipe should be sloped to drain to a suitable outlet. Typical wall drainage design is illustrated in Appendix D. In light of expansive wall backfill that might be generated during wall installation on this site, Leighton recommends that a 3-foot select backfill zone (rectangular distribution) be used. This select backfill should be very low to low expansive soil. The drainage layer may be used as part of this select backfill zone.

Alternatively, revised equivalent fluid pressure values for medium or highly expansive soil may be provided upon request by the structural consultant and/or developer for this project.

Foundations for retaining walls in competent formational soils or properly compacted fill should be embedded at least 18 inches below lowest adjacent grade with proper footing setback (Section 6.4). At this depth, an allowable vertical bearing capacity of 2,500 psf may be assumed. This vertical bearing value may be increased 500 psf per foot of additional depth to a maximum bearing of 3000 psf for retaining walls.

It is recommended that loading dock walls be designed for restrained conditions (indicated in the previous section of this report) where adjacent to the proposed building. Loading dock walls should be designed to resist lateral earth pressure and any additional lateral pressure caused by surcharge loads on the adjoining slab surface (stock piled goods). Approximately ¼ to ½ of the surcharge loads on the adjoining truck loading dock slab may be added as a uniform surcharge

load in back of the loading dock wall. For example, a stockpiled load of 100 psf may exert 25 to 50 psf on the back of the adjacent loading dock wall. The structural consultant should review the slab/wall connection(s) and the likely wall condition, i.e. restrained or active wall condition.

6.7 Site Soil Corrosivity

6.7.1 Ferrous Corrosivity

Many factors can affect the corrosion potential of soil including soil moisture content, resistivity, permeability and pH, as well as chloride and sulfate concentration. In general, soil resistivity, which is a measure of how easily electrical current flows through soils is the most influential factor. Based on the findings of studies presented in ASTM STP 1013 titled "Effects of Soil Characteristics on Corrosion" (February, 1989), the approximate relationship between soil resistivity and soil corrosiveness was developed as shown in Table 3.

Table 3. Relationship between Soil Resistivity and Soil Corrosivity

Soil Resistivity (ohm-cm)	Classification of Soil Corrosiveness
0 to 900	Very Severely Corrosive
900 to 2,300	Severely Corrosive
2,300 to 5,000	Moderately Corrosive
5,000 to 10,000	Mildly Corrosive
10,000 to >100,000	Very Mildly Corrosive

Acidity is an important factor of soil corrosivity. The lower the pH (the more acidic the environment), the higher the soil corrosivity will be with respect to buried metallic structures and utilities. As soil pH increases above 7 (the neutral value), the soil is increasingly more alkaline and less corrosive to buried steel structures, due to protective surface films, which form on steel in high pH environments. A pH between 5 and 8.5 is generally considered relatively passive from a corrosion standpoint. Chloride and sulfate ion concentrations, and pH appear to play secondary roles in affecting corrosion potential. High chloride levels tend to reduce soil resistivity and break down otherwise protective surface deposits, which can result in corrosion of buried steel or reinforced concrete structures.

6.7.2 Sulfate Attack

Sulfate ions in the soil can lower the soil resistivity and can be highly aggressive to Portland Cement concrete by combining chemically with certain constituents of the concrete, principally tricalcium aluminate. This reaction is accompanied by expansion and eventual disruption of the concrete matrix. Potentially high sulfate content could also cause corrosion of the structural concrete. In accordance with American Concrete Institute (ACI 318-08), Table 4 below provides exposure categories based on water-soluble sulfate in soil.

Table 4. Relationship between Sulfate Concentration and Exposure Category

Sulfate In Water (parts-per-million)	Water-Soluble Sulfate (SO_4) in soil (percentage by weight)	Exposure
0-150	0.00 - 0.10	Negligible
150-1,500	0.10 - 0.20	Moderate[1]
1,500-10,000	0.20 - 2.00	Severe
>10,000	Over 2.00	Very Severe

[1]= seawater

6.7.3 Corrosivity Test Results

To evaluate the corrosion potential of the subsurface soils, we tested a soil sample collected during our subsurface investigation for soluble sulfate and chloride content, pH and Resistivity testing. Results of these tests are summarized in Table 5 below.

Table 5. Results of Corrosivity Testing

Boring Number	Sample Depth (feet)	Sulfate (mg/kg)	Chloride (mg/kg)	PH	Minimum Resistivity (ohm-cm)
B-17	15 to 20	<150	460	7.98	14,385

Note: mg/kg = milligrams per kilogram, or parts-per-million

As shown in Table 5, minimum soil resistivity of 14,385 ohm-centimeters was measured in our laboratory test. Based on resistivity correlation presented in Table 3, it appears that the corrosion potential to buried steel may be characterized as “very mildly corrosive” for the tested soils. Ferrous pipe buried in moist to wet site earth materials should be avoided by using high-density polyethylene (HDPE) or other non-ferrous pipe when possible. Ferrous pipe can be protected by polyethylene bags, tap or

coatings, di-electric fittings or other means to separate the pipe from on-site soils. If buried metal improvements are planned at the site, specific recommendations for corrosion protection will need to be provided by a qualified corrosion engineer. Based on our limited laboratory test, it is our opinion that sulfate exposure may be considered "negligible" for the native subsurface materials sampled at the site.

6.8 Slope Stability

Based on our review of the conceptual grading plans and proposed remedial grading, cut slopes and fill slopes with 2:1 (H:V) slope ratios with maximum heights of 50 to 65 feet are proposed.

Based on the results of our laboratory testing and experience with similar soil types in nearby areas, the proposed 2:1 (horizontal to vertical) cut slopes will be generally grossly stable and have calculated factors of safety in excess of 1.5 under static conditions and 1.1 for seismic conditions for a maximum height of 50 feet. However, for planning purposes, due to the highly variable nature of the onsite alluvium, all cut slopes greater than 5 feet and less than 30 feet in height should be constructed as replacement fills as depicted in Appendix B. Cut slopes greater than 30 feet in height will require additional analysis. Due to proposed onsite stormwater basins and interbedded gravelly sand layers, the installation of a subdrain system and/or interceptor ditches may be needed during replacement fill construction. The subdrain system can be outletted into the site storm drain system or discharged properly into lower elevations. Additional slope stability evaluation should be performed when development plans become available.

In addition, slope faces are inherently subject to erosion, particularly if exposed to rainfall and irrigation. Landscaping and slope maintenance should be conducted as soon as possible in order to increase long-term surficial stability.

6.8.1 Natural Drainage Slopes

Based on our geotechnical evaluation, the existing major drainage courses on the east portion of the World Logistics Center property are over-steepened and subject to slope failure (toppling, slumping) and erosion. If the existing drainage courses are to remain in their natural state (i.e. undisturbed and not filed in), setbacks should be considered based on adjacent planned land use. For planning purposes, a

preliminary setback distance for structures equal to 2X the drainage channel slope height may be used. For landscaping and other non-structural uses, a minimal setback such as ½ the slope height or 7 foot minimum may be considered for improvements such as trails, fences etc. This minimal setback area is subject to effects of possible slop failure.

6.9 Drainage

All drainage should be directed away from structures and pavements by means of approved permanent/temporary drainage devices. Adequate storm drainage of any proposed pad should be provided to avoid wetting of foundation and pavement subgrade soils. Irrigation adjacent to buildings should be avoided wherever possible. As an option, sealed-bottom planter boxes and/or drought resistant vegetation should be used within 5-feet of buildings. Pavements should be separated from irrigated areas by embedded concrete curbs extending below pavement base. Below grade stormwater percolation or retention facilities (if planned) should be located a minimum distance of 15 feet from structural footings. Provisions to prevent the lateral migration of subsurface saturation below adjacent structures or into descending slopes may be needed.

6.10 Preliminary Pavement Design Parameters

For planning and estimating purposes we have made some assumptions based on the anticipated vehicle traffic usage. The appropriate pavement section will depend on the type of subgrade soil, shear strength, traffic load and planned pavement life. Since an evaluation of the actual subgrade soils cannot be made at this time, we have assumed an R-value of 30 based on limited site soil laboratory testing and our professional experience in the site vicinity. The pavement sections are calculated based on Traffic Indexes (TI) as indicated in Table 6 below:

Table 6. Preliminary Asphalt Pavement Section Thickness

General Traffic Condition	Design Traffic Index (TI)	Asphalt Concrete (inches)	Aggregate Base* (inches)
Automobile Parking Stalls	5.0	3.0	6.0
Automobile Drive Lanes	6.0	3.5	7.0
Truck Access & Parking Areas	7.0	4.0	9.0

Site Roadways	9.0	5.5	12.5
	10.0	6.0	14.5

Appropriate Traffic Index (TI) data should be selected by the project civil engineer or traffic engineering consultant and appropriate R-value of the subgrade soils will need to be determined after completion of rough grading to finalize the pavement design. Final pavement sections should be in general accordance with local, county and industry standards. The Caltrans pavement section design calculations were based on a pavement life of approximately 20 years with a normal amount of flexible pavement maintenance. Portland cement concrete should be used, rather than asphalt, in point and impact load areas such as loading docks and trash truck bin loading areas.

Subgrade soils in the upper 6 inches should be properly compacted to at least 95 percent relative compaction (ASTM D1557) and should be moisture-conditioned to optimum or slightly above optimum, and kept in this condition until the pavement section is constructed. Minimum relative compaction requirements for aggregate base should be 95 percent of the maximum laboratory density as determined by ASTM D1557.

Asphalt concrete and aggregate base should conform to *Caltrans Standard Specifications* (Latest Edition) Sections 39 and 26-1.02A, respectively. As an alternative, asphalt concrete can conform to Section 203-6 of the *Standard Specifications for Public Works Construction* (Green Book). Crushed aggregate base or crushed miscellaneous base can conform to Sections 200-2.2 and 200-2.4 of the *Standard Specifications for Public Works Construction* (Green Book), respectively. Pavement subgrades should be compacted to 90 percent and pavement base should be compacted to 95 percent of the ASTM D1557 laboratory maximum density for these materials.

For preliminary planning purposes, fire lanes and truck loading areas may be constructed of Portland Cement Concrete (PCC) with a minimum thickness of 6.0 inches assuming light axle loads and an average daily truck traffic (ADTT) of less than 500. For medium/heavy axle loads and an ADT of 500 or more, a minimum PCC thickness of 7 inches should be used, such as for trash corrals and trash truck aprons, loading docks, etc. All PCC pavement should have a minimum 28-day concrete compressive strength of 3,250 psi and have appropriate joints and saw cuts in accordance with either Portland Cement Association (PCA) or American Concrete Institute (ACI) guidelines. PCC subgrade should be compacted to 95 percent relative compaction in the upper 6 inches. For truck

lanes and ramps, a 4-inch (minimum) layer of Class 2 aggregate base at 95 percent relative compaction should be considered beneath the PCC paving. This 4-inch layer of Class 2 aggregate may be used beneath other areas of PCC pavement to improve performance. The upper 6 inches of the underlying subgrade soils should also be compacted to at least 95 percent relative compaction (ASTM D1557).

The above PCC sections should be re-evaluated following the provision of the precise grading plans. We recommend that the ADT be confirmed by the project civil designer or traffic consultant prior to completion of the project.

Additional details should be added to the plans indicating the pavement thickness transitions, pavement joint dowels, expansion joints and sawcut joints. Use of concrete cutoff or edge barriers should be considered at the perimeter of the common parking or driveway areas when they are adjacent to either open (unfinished) or landscaped areas.

7.0 GEOTECHNICAL REVIEW

Geotechnical review is of paramount importance in engineering practice. The poor performance of many foundation and earthwork projects have attributed to inadequate construction review. We recommend that Leighton be provided the opportunity to review the following items.

7.1 Plans and Specifications

Leighton should review the project rough-grading plans as well as foundation and specifications prior to release for bidding and construction. Such review is necessary to evaluate whether the geotechnical recommendations have been effectively incorporated in plans and other construction documents. Review findings should be reported in writing by the geotechnical engineer. Additional subsurface evaluation may be warranted dependent upon the results of a detailed plan review.

7.2 Future Investigations

It is our opinion that the existing studies completed are sufficient for the current Specific Plan development. Based on our future review of Tentative Tract Map or specific plan, additional clarification studies may be recommended. If structural development is planned near the “preliminary structural setback zone” or other area of the State Earthquake Fault Hazard Zone or other mapped faults, coseismic fracture areas, additional geologic investigation in those areas is recommended. In order to refine the alignment and size of the setbacks, further trenching is necessary to further constrain the faulting as it crosses the property.

Additionally, upon review of grading and development plans, additional subsurface geotechnical exploration may be locally needed to further evaluate the subsurface conditions relative to the planned development for further evaluation of slope stability remedial earthwork and foundation design recommendations.

7.3 Construction Review

Observation and testing should be performed by Leighton during grading and construction. It should be anticipated that the subsurface conditions exposed during construction may vary from those encountered in the borings and other explorations. Reasonably continuous construction observation and review during

site grading and foundation installation allows for evaluation of the actual soil conditions and the ability to provide appropriate revisions during grading and construction, if required.

Site preparation, removal of unsuitable soils, geologic observation and mapping of all earthwork excavations, approval of imported earth materials, fill placement, foundation installation and other site geotechnically-related operations should be observed and tested by Leighton. Additional laboratory tests of subsurface materials to confirm compacted dry density and moisture content, consolidation potential corrosion potential, expansion potential, and resistance value (R-value) should be performed during or prior to grading.

8.0 LIMITATIONS

This preliminary report was necessarily based in part upon data obtained from a limited number of observances, site visits, soil samples, tests, analyses, histories of occurrences, spaced subsurface explorations and limited information on historical events and observations. Such information is necessarily incomplete. The nature of many sites is such that differing characteristics can be experienced within small distances and under various climatic conditions. Changes in subsurface conditions can and do occur over time.

This report was prepared for Highland Fairview Properties, LLC needs, directions, and requirements. This report is not authorized for use by, and is not to be relied upon by any party except Highland Fairview Properties, LLC, and its successors and assigns as owner of the property, with whom Leighton and Associates, Inc. has contracted for the work. Use of or reliance on this report by any other party is at that party's risk. Unauthorized use of or reliance on this report constitutes an agreement to defend and indemnify Leighton and Associates, Inc. from and against any liability which may arise as a result of such use or reliance, regardless of any fault, negligence, or strict liability of Leighton and Associates, Inc.

The client is referred to Appendix C regarding important information provided by the Associated Soil and Foundation Engineers (ASFE) on geotechnical engineering studies and reports and their applicability.

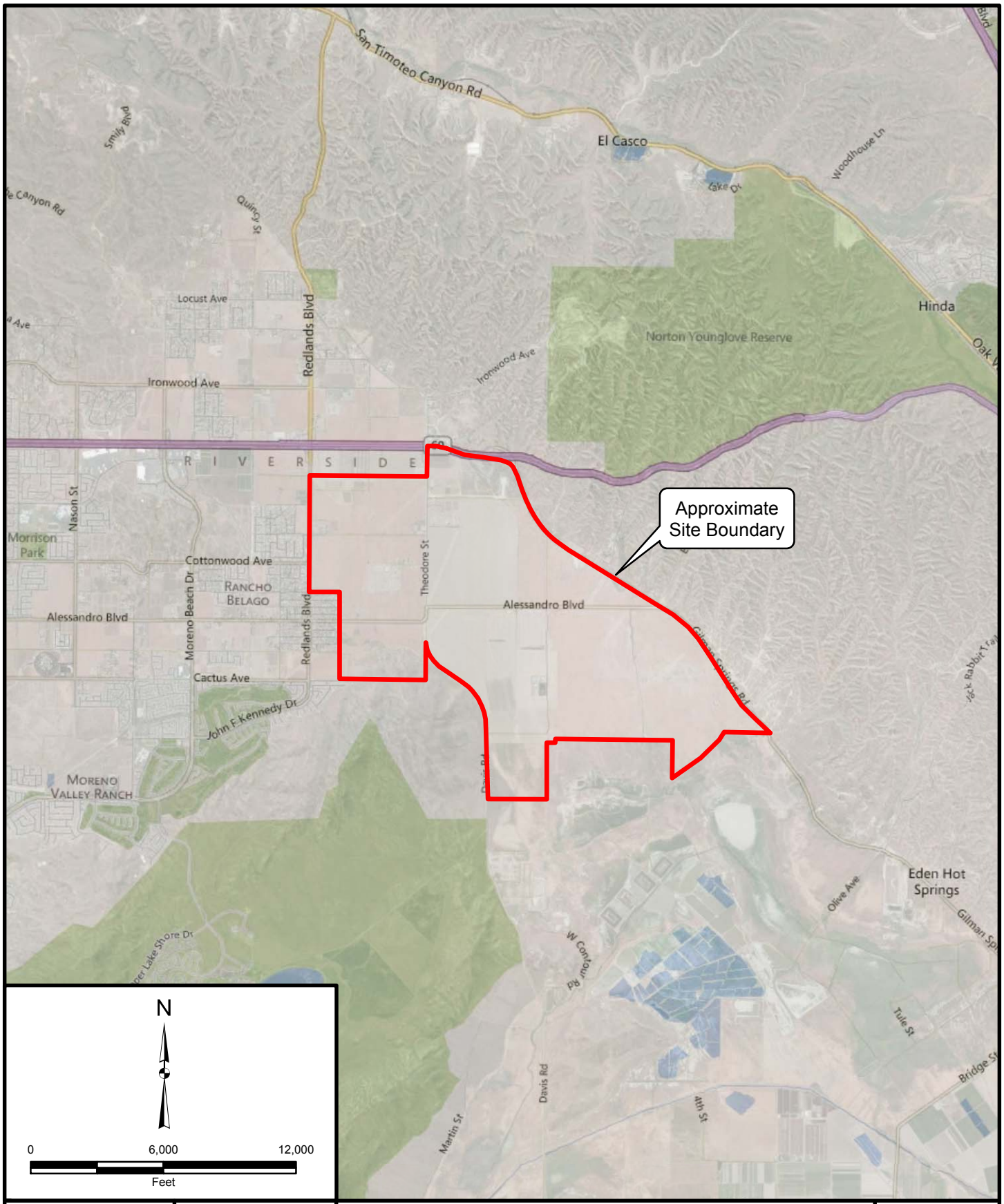

Project: 111061-126	Eng/Geol: SIS/RFR
Scale: 1 " = 6,000 '	Date: January, 2013

Base Map: ESRI Resource Center, 2010

Thematic Info: Leighton

Author: (mmurphy)

SITE LOCATION MAP

World Logistics Center Specific Plan
Moreno Valley, California

Figure 1

Leighton

Map Saved as P:\drafting\111061\126\GIS\of_2011-11-28\Figure1.mxd on 3/23/2012 3:43:20 PM

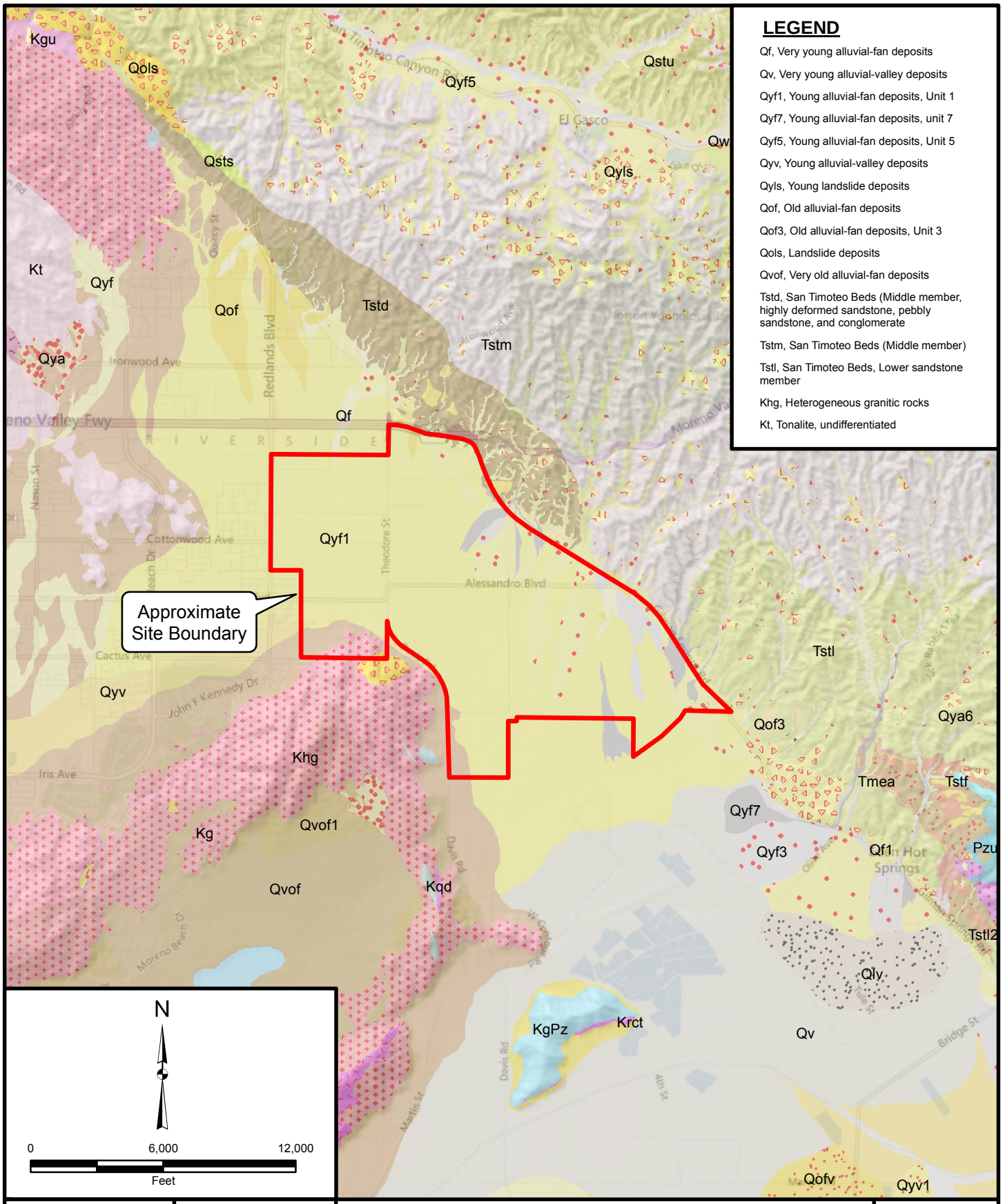

Project: 111061-126	Eng/Geol: SIS/RFR
Scale: 1 " = 6,000 '	Date: January, 2013

Base Map: ESRI Resource Center, 2010
Thematic Info: USGS, 2006, Geologic map of the San Bernardino and Santa Ana 30' x 60' quadrangles, California, Version 1.0, Open File Report 2006-1217
Author: (mmurphy)

REGIONAL GEOLOGY MAP

World Logistics Center Specific Plan
Moreno Valley, California

Figure 2

Leighton

Map Saved as P:\drafting\111061\126\GIS\of_2011-11-28\Figure2.mxd on 3/23/2012 3:31:25 PM

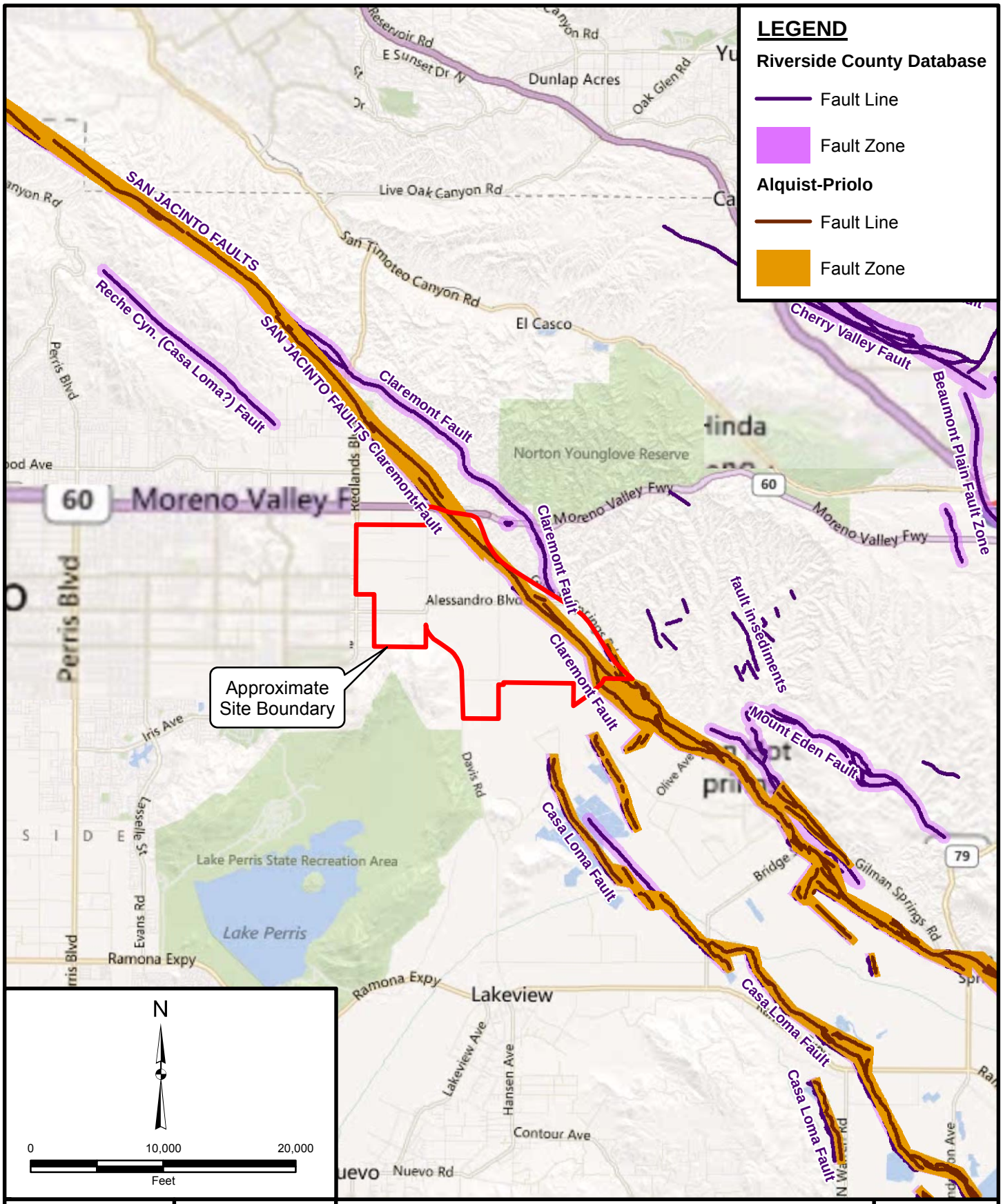

Project: 111061-126	Eng/Geol: SIS/RFR
Scale: 1 " = 10,000 '	Date: January, 2013

Base Map: ESRI Resource Center, 2010
Thematic Info: Riverside County, Alquist-Priolo, Leighton
Author: (mmurphy)

REGIONAL FAULT MAP

World Logistics Center Specific Plan
Moreno Valley, California

Figure 3

Leighton

Map Saved as P:\drafting\111061\126\GIS\of_2011-11-28\Figure3.mxd on 3/23/2012 3:32:01 PM

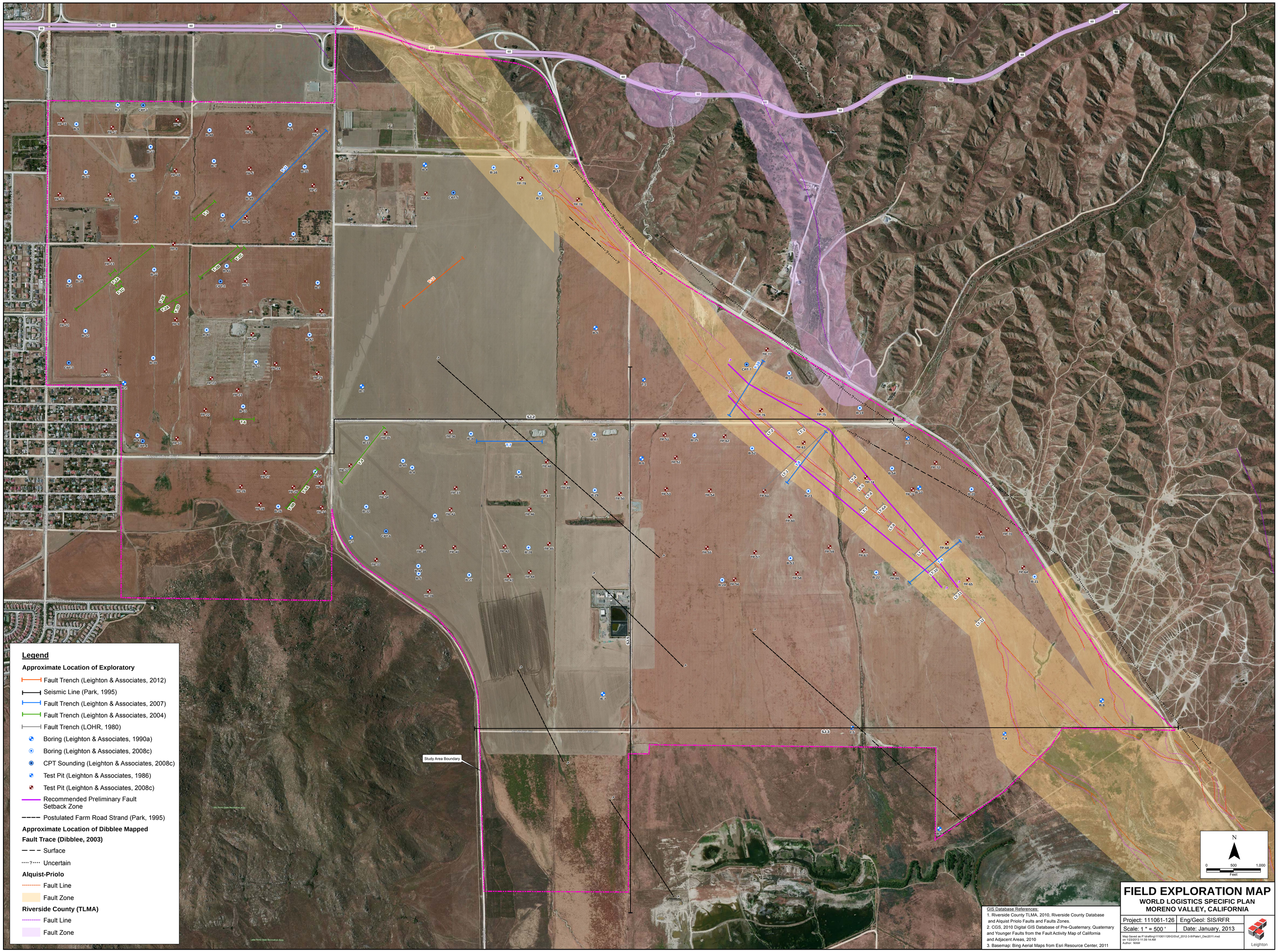

GIS Database References:
1. Riverside County TLMA, 2010, Riverside County Database and Alquist Priolo Faults and Faults Zones.
2. CGS, 2010 Digital GIS Database of Pre-Quaternary, Quaternary and Younger Faults from the Fault Activity Map of California and Adjacent Areas, 2010
3. Basemap: Bing Aerial Maps from Esri Resource Center, 2011

FIELD EXPLORATION MAP

WORLD LOGISTICS SPECIFIC PLAN
MORENO VALLEY, CALIFORNIA

Project: 111061-126	Eng/Geol: SIS/RFR
Scale: 1 " = 500 '	Date: January, 2013

Map Saved as P:\drafting\111061\126\GIS\sf_2012-3\Plate1_Dec2011.mxd
on 1/23/2013 11:39:14 AM
Author: MAM

Leighton

APPENDIX A

References

Arabashi, Jay; Steve Klein, John Waggoner, John Townsend, 2003, Riverside Badlands Tunnel, Inland Feeder Project: The Challenge between Concept and Completion.

Blake, T. F., 2000a, EQSEARCH, Version 4.00, A Computer Program for the Estimation of Peak Horizontal Acceleration from Southern California Historical Earthquake Catalogs, Users Manual, 94pp., with update data, 2006.

Bryant, W. A. and Hart, E. W., 2007, Fault-Rupture Hazard Zones in California, Alquist-Priolo Earthquake Fault Zoning with Index to Earthquake Zones Maps: Department of Conservation, California Geologic Survey, Special Publication 42. Interim Revision.

California Building Code, 2010, Volumes 1-3.

California Geological Survey (formerly California Division of Mines and Geology), 1995, State of California Earthquake Fault Zones, El Casco Quadrangle, 7.5 Minute Series.

California Geological Survey (formerly California Division of Mines and Geology), 1995, State of California Earthquake Fault Zones, Sunnymead Quadrangle, 7.5 Minute Series.

California Geological Survey (formerly California Division of Mines and Geology), 1996, Probabilistic Seismic Hazard Assessment for the State of California, Open-File Report 96-08.

California Geological Survey, 1997, Guidelines for evaluating and mitigating seismic hazards in California: California Geological Survey, Special Publication 117, 74p., 7 chapters, Appendix A,B,C, and D. www.conservation.ca.gov/cgs

Dibblee, Thomas, W., Jr. 1981, South Coast Geological Society, Perris Quadrangle, Edited by Arthur R. Brown.

Dibblee, Thomas, W., Jr. 2003, Geologic Map of the El Casco Quadrangle, Riverside County, California, Edited by John A. Minch.

Eberhart/United Consultants, 2007, City of Moreno Valley Supplemental Fault Investigation Report Approval, Moreno Highlands Development, Moreno Valley, California, dated April 30, 2007.

Kahle, J.E., 1987. The San Jacinto Fault Zone (The Claremont, Casa Loma, and Related Faults) in the Lakeview and El Casco Quadrangles, Riverside County, California. California Division of mines and Geology Fault Evaluation Report FER-179. July 21, 1987.

Kendrick, K. J., McFadden, Les, and Morton, D.M., 1994, Soils and slip rates along the northern San Jacinto Fault, in McGill, S. F., and Ross, T. M., editors, Geological Investigations of an Active Margin: GSA, Cordilleran Section Guidebook, 27th Annual Meeting, San Bernardino, pages 146-151.

Kendrick, K. J., Morton, D. M.., Wells, S.G., and Simpson, R. W., 2002, Spatial and temporal deformation along the northern San Jacinto Fault, southern California: implications for slip rates: BSSA, vol. 92, no. 7, October 2002 issue.

Kendrick, K.J., 2005, Paleoseismicity of the Northern San Jacinto Fault, Colton and San Bernardino, Southern California; Preliminary Results, in Geological Society of America Abstracts with Programs, Vol. 37, No. 7, p. 559.

King, N.E., and Savage, J.C., 1983, Strain-rate profile across the Elsinore, San Jacinto and the San Andreas faults near Palm Springs, California, 1973-81: Geophysical Research Letters, v. 10, no. 1, p. 55-37.

Langan, 2013, Review of Preliminary Geotechnical Evaluation for Environmental Impact Report World Logistics Center Specific Plan South of Highway 60 Between Redlands Boulevard and Gilman Springs Road, City of Moreno Valley, California, Project No. 700012703, dated January 18, 2013.

Leighton and Associates, Inc., 1986, Preliminary Geotechnical Investigation for Environmental Impact Report Purposes, Proposed Moreno Valley International Trade Center, Moreno Valley, California, dated September 19, 1986.

Leighton and Associates, Inc., 1989, Summary of Soil Sampling and Analysis for 650+ Acre Site Located North of Alessandro Boulevard and East of Theodore Street, City of Moreno Valley, Riverside County, California, and Review of SWAT Report Performed on December 4, 1989 by Leighton and Associates, Inc. (L&A), Project No. 40890257-03, dated December 18, 1989.

Leighton and Associates, Inc., 1990, Supplemental Soil/Foundation Liquefaction Investigation, Moreno Highlands, City of Moreno Valley, California, Project no. 6890257-02, dated January 31, 1990.

Leighton and Associates, Inc., 2004, Preliminary Fault Investigation, Tentative Tract Map No. 32501, Moreno Highlands, City of Moreno Valley, California, Project No. 111061-103, dated December 3, 2004.

Leighton and Associates, Inc., 2006, Preliminary Geotechnical Investigation, Moreno Highlands Specific Plan Area, Southeast Corner of Highway 60 and Redlands Boulevard, City of Moreno Valley, Riverside County, California, Project No. 111061-104, dated March 8, 2006.

Leighton and Associates, Inc., 2007a, Supplemental Fault Investigation, Moreno Highlands Development, City of Moreno Valley, California, Project No. 111061-107, dated February 15, 2007.

Leighton and Associates, Inc., 2007b, Preliminary Geotechnical Report, Tentative Parcel Map 35629, Moreno Valley, California, Project No. 111061-108, dated June 15, 2007.

Leighton and Associates, Inc., 2008a, Update Preliminary Geotechnical Report, Tentative Parcel Map 35629, Highland Fairview Corporate Park, City of Moreno Valley, California, Project No. 111061-116, dated April 30, 2008.

Leighton and Associates, Inc., 2008b, Response to Screencheck Draft Environmental Impact Report Review Comments with Respect to Seismic/Faulting, Highland Fairview Corporate Park, Tentative Parcel Map 35629, Moreno Valley, California, Project No. 111061-116, dated June 4, 2008.

Leighton and Associates, Inc., 2008c, Update Geotechnical Report, Moreno Highlands Specific Plan Area, Southeast Corner of Highway 60 and Redlands Boulevard, City of Moreno Valley, California, Project No. 111061-113, dated July 21, 2008.

Leighton and Associates, Inc. 2011, Preliminary Geotechnical Evaluation for Environmental Impact Report, “The Highlands Specific Plan,” South of Highway 60 between Redlands Boulevard and Gilman Springs Road, City of Moreno Valley, California, project No. 111061-126, dated December 13, 2011.

Leighton and Associates Inc., 2012, Supplemental Fault Investigation, Lee Property, Portion of World Logistics Center Specific Plan Area, City of Moreno Valley, California, Project No. 111061-127, dated March 20, 2012.

Leighton and Associates, 2012, Response to Review Comments prepared from City of Moreno Valley Planning Division and Land Development Division, World Logistics Center (WLC) EIR, Moreno Valley, California, Project No. 111061-126, dated November 20, 2012.

Lofgren, Ben E., and Rubin, Meyer, 1975, Radiocarbon Dates indicate rates of the San Jacinto Valley Graben, California: Journal Research v.s. Geological Survey, Vol. 3 No. 1.

Lofgren, Ben E., and Rubin, Meyer, 1976, Land subsidence and aquifer-system compactions in the San Jacinto Valley, Riverside County, California—progress report: Journal Research vs. Geological Survey, Vol. 4 No 1.

Lohr, L.S., 1980, Alquist-Priolo Special Studies Zone Fault Investigation for Parcel Map No. 16950, Job No. 87-80-12, dated December 16, 1980.

Mann, J.F., 1991, Ground Water Resources of Moreno Highlands dated August 30, 1991.

Morton, D.M., and Matti, J.C., 1993, Extension and contraction within an evolving divergent strike-slip fault complex: the San Andreas and San Jacinto fault zones at their convergence in southern California, in Powell, R.E., Weldon, R.J.II, and Matti, J.C., editors, The San Andreas fault system: displacement, palinspastic reconstruction, and geologic evolution: GSA, Memoir 178, p. 217-230.

Morton, D.M., 1974, Surface Deformation in part of the San Jacinto Valley, southern California, *Journal Research U.S. Geologic Survey*, vol. 5, no. 1, pages 117-124, Jan.-Feb. 1977.

Morton, D.M., 1994, Subsidence and ground fissures in the San Jacinto basin area, southern California, in U.S. Geological Survey Subsidence Interest Group Conference: U.S. Geological Survey Open-File Report 94-532, p.29-31.

National Center for Earthquake Engineering Research, (NCEER), 1997, Proceedings of the NCEER Workshop of Liquefaction Resistance of Soils, Technical Report NCEER-97-0022, dated December 31, 1997.

Parsons Brinkerhoff, 2012, Limits of Environmental Analysis, Fig. 3, dated Feb. 2012.

Park, S.K., and Pendergraft, D., Stephenson, W.J., Shedlock, K.M., and Lee, T.C., 1995 Delineation of intrabasin structure in a dilational jog of the San Jacinto fault zone, southern California, *Journal of Geophysical Research*, vol. 100, no. B1, pages 691-702, January 10, 1995.

Pradel, D., 1998, Procedure to Evaluate Earthquake Induced Settlements in Dry Sandy Soils, ASCE Journal of Geotechnical and Geoenvironmental Engineering, Vol. 124, No. 4, dated April 1998.

Riverside County, Department of Transportation and Land Management, Building and Safety Department, Planning Department, Transportation Department, Technical Guidelines for Review of Geotechnical and Geologic Reports, 2000.

Riverside County, 2003, Riverside County General Plan Safety Element and Appendix H, Adopted October 7, 2003, Geotechnical Report (Technical Background Document).

Rockwell, T., et al, 2003, 3,000 years of ground-rupturing earthquakes in the Anza Seismic Gap, San Jacinto Fault, southern California: Time to shake it up?, paper presented at 2003 SCEC Annual Meeting, South. Calif. Earthquake Cent., Oxnard, Calif.

Southern California Earthquake Center (SCEC), 2011, San Jacinto Fault Zone, www.data.scec.org/fault_index/sanjacin.html, website viewed on November 15, 2011.

Tokimatsu, K., and Seed, H.B., 1987, Evaluation of Settlements in Sands Due to Earthquake Shaking, ASCE Journal of Geotechnical Engineering, Vol. 113, No. 8, dated August 1987.

Toppozada, T.R., Borchardt, G., Hallstrom, C., Johnson, C., Per, R., and Lagario, H. 1993, Planning scenario for a major earthquake on the San Jacinto fault Riverside and San Bernardino Counties, California: California Geological Survey, Special Publication 102, 219 p.

Von Hake, Carl A., Earthquake Information Bulletin, Volume 3, Number 2, March - April 1971.

United States Geological Survey, (USGS), 2006, Geologic Map of the San Bernardino and Santa Ana 30'x60' quadrangles, California, Version 1.0, Open File Report 2006-1217.

United States Geological Survey, (U.S.G.S), 2007, Complete Report for San Jacinto fault, San Jacinto Valley Section (Class A) No. 125b, http://earthquakes.usgs.gov/regional/qfaults, website viewed on November 15, 2011.

United States Geological Survey and California Geologic Survey, 2006, Quaternary fault and fold database for the United States, accessed May 19, 2011 from USGS web site: http//earthquakes.usgs.gov/regional/qfaults/

United States Geological Survey, 2011, A Computer Program Published by USGS to calculate Seismic Hazard Curves and Response and Design Parameters based on ASCE 7-05 seismic procedures, Version 5.1.0, Revision ed Feb 2011.

WGCEP - Working Group on California Earthquake Probabilities, 1995, Seismic Hazards in Southern California: Probable Earthquake Probabilities, Bull. Seismol. Soc. Amer., Vol. 85, No. 2, pp 379-439.

APPENDIX B

General Earthwork and Grading Specifications

EARTHWORK AND GRADING SPECIFICATIONS

TABLE OF CONTENTS

Section		Page
1.0	GENERAL	1
1.1	Intent	1
1.2	The Geotechnical Consultant of Record	1
1.3	The Earthwork Contractor	1
2.0	PREPARATION OF AREAS TO BE FILLED	2
2.1	Clearing and Grubbing	2
2.2	Processing	3
2.3	Overexcavation	3
2.4	Benching	3
2.5	Evaluation/Acceptance of Fill Areas	3
3.0	FILL MATERIAL	4
3.1	General	4
3.2	Oversize	4
3.3	Import	4
4.0	FILL PLACEMENT AND COMPACTION	4
4.1	Fill Layers	4
4.2	Fill Moisture Conditioning	5
4.3	Compaction of Fill	5
4.4	Compaction of Fill Slopes	5
4.5	Compaction Testing	5
4.6	Frequency of Compaction Testing	5
4.7	Compaction Test Locations	6
5.0	SUBDRAIN INSTALLATION	6
6.0	EXCAVATION	6
7.0	TRENCH BACKFILLS	6
7.1	Safety	6
7.2	Bedding & Backfill	7
7.3	Lift Thickness	7
7.4	Observation and Testing	7

STANDARD DETAILS

A - Keying and Benching	Rear of Text
B - Oversize Rock Disposal	Rear of Text
C - Canyon Subdrains	Rear of Text
D - Buttress or Replacement Fill Subdrains	Rear of Text
E - Transition Lot Fills and Side Hill Fills	Rear of Text
Retaining Wall	Rear of Text

1.0 General

1.1 Intent

These General Earthwork and Grading Specifications are for the grading and earthwork shown on the approved grading plan(s) and/or indicated in the geotechnical report(s). These Specifications are a part of the recommendations contained in the geotechnical report(s). In case of conflict, the specific recommendations in the geotechnical report shall supersede these more general Specifications. Observations of the earthwork by the project Geotechnical Consultant during the course of grading may result in new or revised recommendations that could supersede these specifications or the recommendations in the geotechnical report(s).

1.2 The Geotechnical Consultant of Record

Prior to commencement of work, the owner shall employ the Geotechnical Consultant of Record (Geotechnical Consultant). The Geotechnical Consultants shall be responsible for reviewing the approved geotechnical report(s) and accepting the adequacy of the preliminary geotechnical findings, conclusions, and recommendations prior to the commencement of the grading.

Prior to commencement of grading, the Geotechnical Consultant shall review the "work plan" prepared by the Earthwork Contractor (Contractor) and schedule sufficient personnel to perform the appropriate level of observation, mapping, and compaction testing.

During the grading and earthwork operations, the Geotechnical Consultant shall observe, map, and document the subsurface exposures to verify the geotechnical design assumptions. If the observed conditions are found to be significantly different than the interpreted assumptions during the design phase, the Geotechnical Consultant shall inform the owner, recommend appropriate changes in design to accommodate the observed conditions, and notify the review agency where required. Subsurface areas to be geotechnically observed, mapped, elevations recorded, and/or tested include natural ground after it has been cleared for receiving fill but before fill is placed, bottoms of all "remedial removal" areas, all key bottoms, and benches made on sloping ground to receive fill.

The Geotechnical Consultant shall observe the moisture-conditioning and processing of the subgrade and fill materials and perform relative compaction testing of fill to determine the attained level of compaction. The Geotechnical Consultant shall provide the test results to the owner and the Contractor on a routine and frequent basis.

1.3 The Earthwork Contractor

The Earthwork Contractor (Contractor) shall be qualified, experienced, and knowledgeable in earthwork logistics, preparation and processing of ground to receive fill, moisture-conditioning and processing of fill, and compacting fill. The Contractor shall review and accept the plans, geotechnical report(s), and these Specifications prior to commencement of grading. The Contractor shall be solely responsible for performing the grading in accordance with the plans and specifications.

The Contractor shall prepare and submit to the owner and the Geotechnical Consultant a work plan that indicates the sequence of earthwork grading, the number of "spreads" of work and the estimated quantities of daily earthwork contemplated for the site prior to commencement of grading. The Contractor shall inform the owner and the Geotechnical Consultant of changes in work schedules and updates to the work plan at least 24 hours in advance of such changes so that appropriate observations and tests can be planned and accomplished. The Contractor shall not assume that the Geotechnical Consultant is aware of all grading operations.

The Contractor shall have the sole responsibility to provide adequate equipment and methods to accomplish the earthwork in accordance with the applicable grading codes and agency ordinances, these Specifications, and the recommendations in the approved geotechnical report(s) and grading plan(s). If, in the opinion of the Geotechnical Consultant, unsatisfactory conditions, such as unsuitable soil, improper moisture condition, inadequate compaction, insufficient buttress key size, adverse weather, etc., are resulting in a quality of work less than required in these specifications, the Geotechnical Consultant shall reject the work and may recommend to the owner that construction be stopped until the conditions are rectified.

2.0 Preparation of Areas to be Filled

2.1 Clearing and Grubbing

Vegetation, such as brush, grass, roots, and other deleterious material shall be sufficiently removed and properly disposed of in a method acceptable to the owner, governing agencies, and the Geotechnical Consultant.

The Geotechnical Consultant shall evaluate the extent of these removals depending on specific site conditions. Earth fill material shall not contain more than 1 percent of organic materials (by volume). No fill lift shall contain more than 5 percent of organic matter. Nesting of the organic materials shall not be allowed.

If potentially hazardous materials are encountered, the Contractor shall stop work in the affected area, and a hazardous material specialist shall be informed immediately for proper evaluation and handling of these materials prior to continuing to work in that area.

As presently defined by the State of California, most refined petroleum products (gasoline, diesel fuel, motor oil, grease, coolant, etc.) have chemical constituents that are considered to be hazardous waste. As such, the indiscriminate dumping or spillage of these fluids onto the ground may constitute a misdemeanor, punishable by fines and/or imprisonment, and shall not be allowed.

2.2 Processing

Existing ground that has been declared satisfactory for support of fill by the Geotechnical Consultant shall be scarified to a minimum depth of 6 inches. Existing ground that is not satisfactory shall be overexcavated as specified in the following section. Scarification shall continue until soils are broken down and free of large clay lumps or clods and the working surface is reasonably uniform, flat, and free of uneven features that would inhibit uniform compaction.

2.3 Overexcavation

In addition to removals and overexcavations recommended in the approved geotechnical report(s) and the grading plan, soft, loose, dry, saturated, spongy, organic-rich, highly fractured or otherwise unsuitable ground shall be overexcavated to competent ground as evaluated by the Geotechnical Consultant during grading.

2.4 Benching

Where fills are to be placed on ground with slopes steeper than 5:1 (horizontal to vertical units), the ground shall be stepped or benched. Please see the Standard Details for a graphic illustration. The lowest bench or key shall be a minimum of 15 feet wide and at least 2 feet deep, into competent material as evaluated by the Geotechnical Consultant. Other benches shall be excavated a minimum height of 4 feet into competent material or as otherwise recommended by the Geotechnical Consultant. Fill placed on ground sloping flatter than 5:1 shall also be benched or otherwise overexcavated to provide a flat subgrade for the fill.

2.5 Evaluation/Acceptance of Fill Areas

All areas to receive fill, including removal and processed areas, key bottoms, and benches, shall be observed, mapped, elevations recorded, and/or tested prior to being accepted by the Geotechnical Consultant as suitable to receive fill. The Contractor shall obtain a written acceptance from the Geotechnical Consultant

prior to fill placement. A licensed surveyor shall provide the survey control for determining elevations of processed areas, keys, and benches.

3.0 Fill Material

3.1 General

Material to be used as fill shall be essentially free of organic matter and other deleterious substances evaluated and accepted by the Geotechnical Consultant prior to placement. Soils of poor quality, such as those with unacceptable gradation, high expansion potential, or low strength shall be placed in areas acceptable to the Geotechnical Consultant or mixed with other soils to achieve satisfactory fill material.

3.2 Oversize

Oversize material defined as rock, or other irreducible material with a maximum dimension greater than 8 inches, shall not be buried or placed in fill unless location, materials, and placement methods are specifically accepted by the Geotechnical Consultant. Placement operations shall be such that nesting of oversized material does not occur and such that oversize material is completely surrounded by compacted or densified fill. Oversize material shall not be placed within 10 vertical feet of finish grade or within 2 feet of future utilities or underground construction.

3.3 Import

If importing of fill material is required for grading, proposed import material shall meet the requirements of Section 3.1. The potential import source shall be given to the Geotechnical Consultant at least 48 hours (2 working days) before importing begins so that its suitability can be determined and appropriate tests performed.

4.0 Fill Placement and Compaction

4.1 Fill Layers

Approved fill material shall be placed in areas prepared to receive fill (per Section 3.0) in near-horizontal layers not exceeding 8 inches in loose thickness. The Geotechnical Consultant may accept thicker layers if testing indicates the grading procedures can adequately compact the thicker layers. Each layer shall be spread evenly and mixed thoroughly to attain relative uniformity of material and moisture throughout.

4.2 Fill Moisture Conditioning

Fill soils shall be watered, dried back, blended, and/or mixed, as necessary to attain a relatively uniform moisture content at or slightly over optimum. Maximum density and optimum soil moisture content tests shall be performed in accordance with the American Society of Testing and Materials (ASTM Test Method D1557).

4.3 Compaction of Fill

After each layer has been moisture-conditioned, mixed, and evenly spread, it shall be uniformly compacted to not less than 90 percent of maximum dry density (ASTM Test Method D1557). Compaction equipment shall be adequately sized and be either specifically designed for soil compaction or of proven reliability to efficiently achieve the specified level of compaction with uniformity.

4.4 Compaction of Fill Slopes

In addition to normal compaction procedures specified above, compaction of slopes shall be accomplished by backrolling of slopes with sheepsfoot rollers at increments of 3 to 4 feet in fill elevation, or by other methods producing satisfactory results acceptable to the Geotechnical Consultant. Upon completion of grading, relative compaction of the fill, out to the slope face, shall be at least 90 percent of maximum density per ASTM Test Method D1557.

4.5 Compaction Testing

Field-tests for moisture content and relative compaction of the fill soils shall be performed by the Geotechnical Consultant. Location and frequency of tests shall be at the Consultant's discretion based on field conditions encountered. Compaction test locations will not necessarily be selected on a random basis. Test locations shall be selected to verify adequacy of compaction levels in areas that are judged to be prone to inadequate compaction (such as close to slope faces and at the fill/bedrock benches).

4.6 Frequency of Compaction Testing

Tests shall be taken at intervals not exceeding 2 feet in vertical rise and/or 1,000 cubic yards of compacted fill soils embankment. In addition, as a guideline, at least one test shall be taken on slope faces for each 5,000 square feet of slope face and/or each 10 feet of vertical height of slope. The Contractor shall assure that fill construction is such that the testing schedule can be accomplished by the Geotechnical Consultant. The Contractor shall stop or slow down the earthwork construction if these minimum standards are not met.

4.7 Compaction Test Locations

The Geotechnical Consultant shall document the approximate elevation and horizontal coordinates of each test location. The Contractor shall coordinate with the project surveyor to assure that sufficient grade stakes are established so that the Geotechnical Consultant can determine the test locations with sufficient accuracy. At a minimum, two grade stakes within a horizontal distance of 100 feet and vertically less than 5 feet apart from potential test locations shall be provided.

5.0 Subdrain Installation

Subdrain systems shall be installed in accordance with the approved geotechnical report(s), the grading plan, and the Standard Details. The Geotechnical Consultant may recommend additional subdrains and/or changes in subdrain extent, location, grade, or material depending on conditions encountered during grading. All subdrains shall be surveyed by a land surveyor/civil engineer for line and grade after installation and prior to burial. Sufficient time should be allowed by the Contractor for these surveys.

6.0 Excavation

Excavations, as well as over-excavation for remedial purposes, shall be evaluated by the Geotechnical Consultant during grading. Remedial removal depths shown on geotechnical plans are estimates only. The actual extent of removal shall be determined by the Geotechnical Consultant based on the field evaluation of exposed conditions during grading. Where fill-over-cut slopes are to be graded, the cut portion of the slope shall be made, evaluated, and accepted by the Geotechnical Consultant prior to placement of materials for construction of the fill portion of the slope, unless otherwise recommended by the Geotechnical Consultant.

7.0 Trench Backfills

7.1 Safety

The Contractor shall follow all OSHA and Cal/OSHA requirements for safety of trench excavations.

7.2 Bedding and Backfill

All bedding and backfill of utility trenches shall be performed in accordance with the applicable provisions of Standard Specifications of Public Works Construction. Bedding material shall have a Sand Equivalent greater than 30 (SE>30). The bedding shall be placed to 1 foot over the top of the conduit and densified by jetting. Backfill shall be placed and densified to a minimum of 90 percent of relative compaction from 1 foot above the top of the conduit to the surface.

The Geotechnical Consultant shall test the trench backfill for relative compaction. At least one test should be made for every 300 feet of trench and 2 feet of fill.

7.3 Lift Thickness

Lift thickness of trench backfill shall not exceed those allowed in the Standard Specifications of Public Works Construction unless the Contractor can demonstrate to the Geotechnical Consultant that the fill lift can be compacted to the minimum relative compaction by his alternative equipment and method.

7.4 Observation and Testing

The jetting of the bedding around the conduits shall be observed by the Geotechnical Consultant.

FILL SLOPE

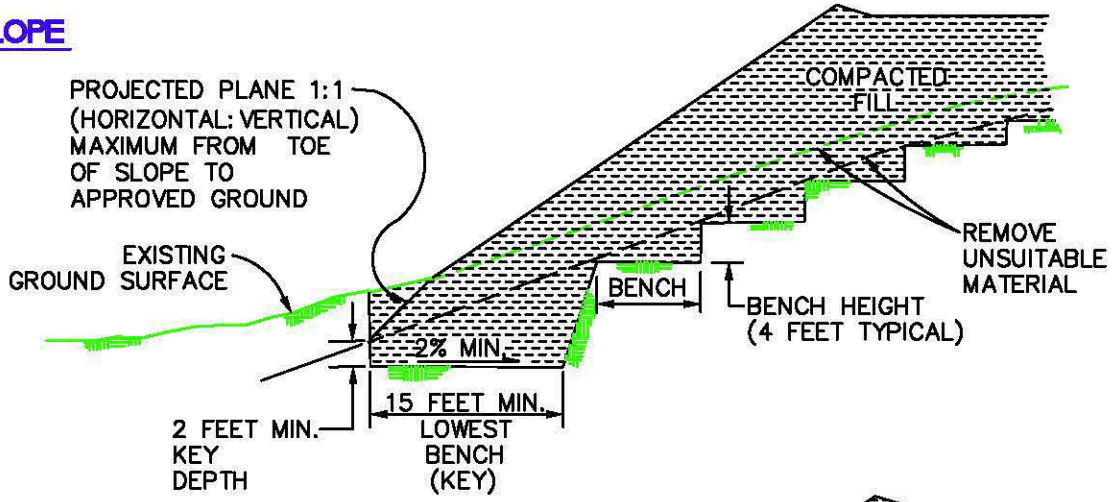

FILL-OVER-CUT SLOPE

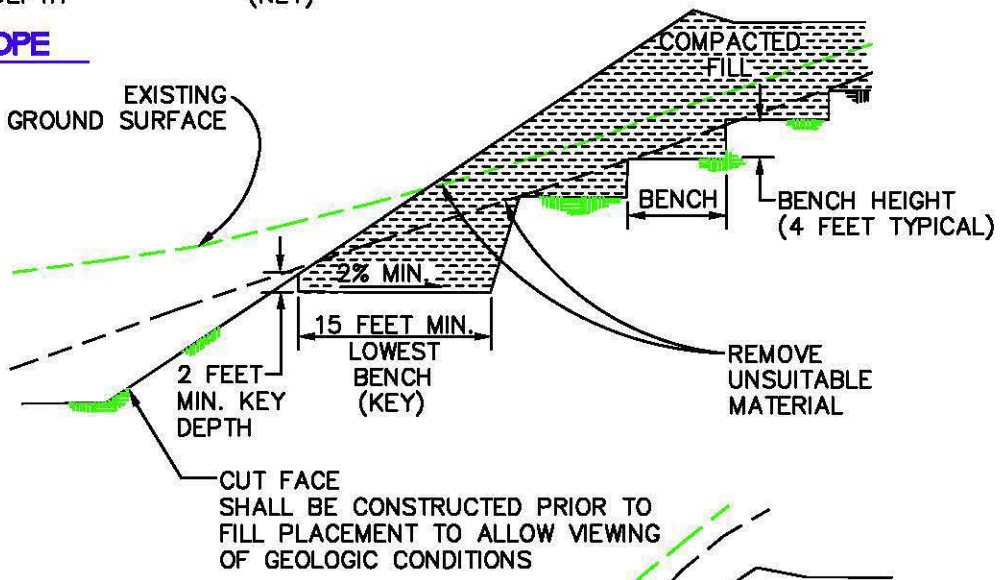

CUT-OVER-FILL SLOPE

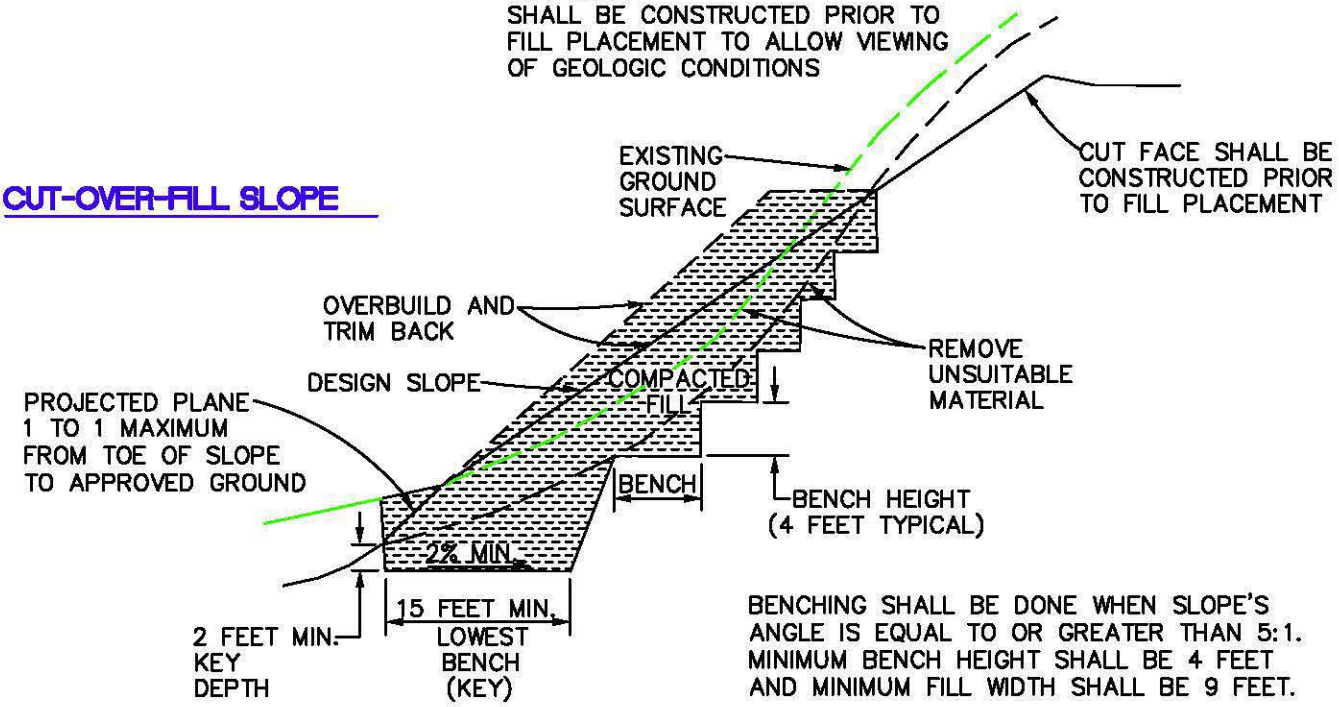

BENCHING SHALL BE DONE WHEN SLOPE'S ANGLE IS EQUAL TO OR GREATER THAN 5:1. MINIMUM BENCH HEIGHT SHALL BE 4 FEET AND MINIMUM FILL WIDTH SHALL BE 9 FEET.

KEYING AND BENCHING	GENERAL EARTHWORK AND GRADING SPECIFICATIONS STANDARD DETAILS A	Leighton

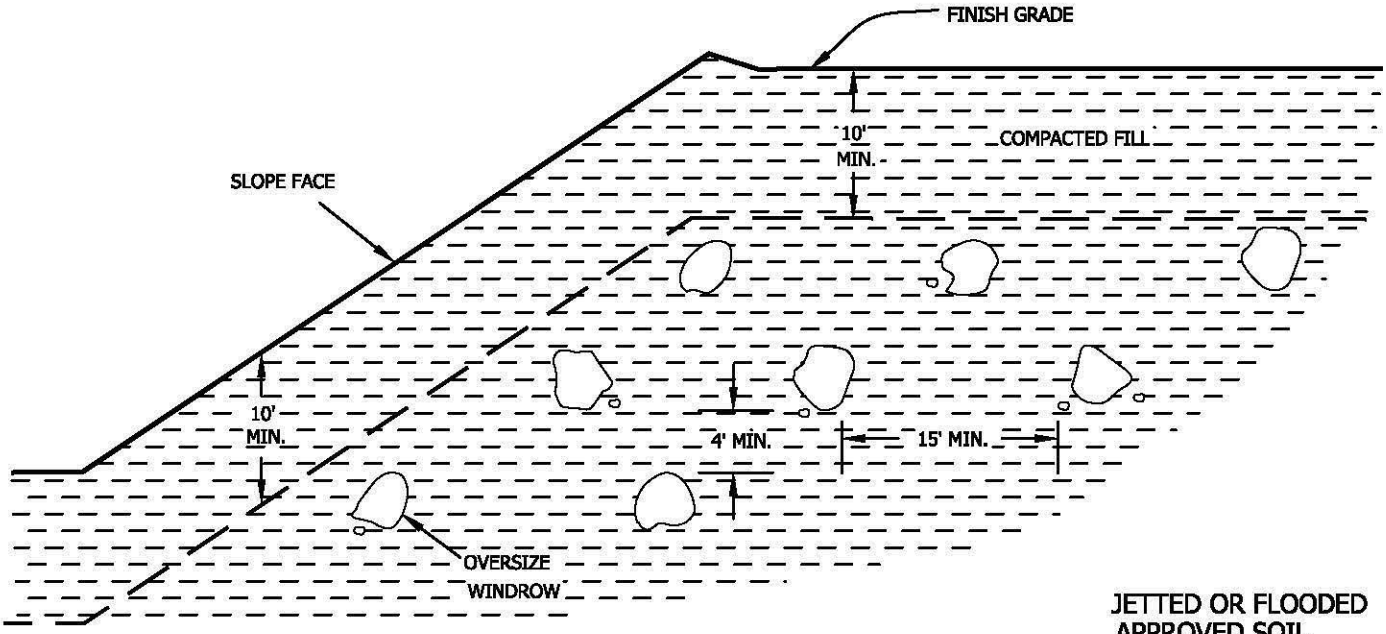

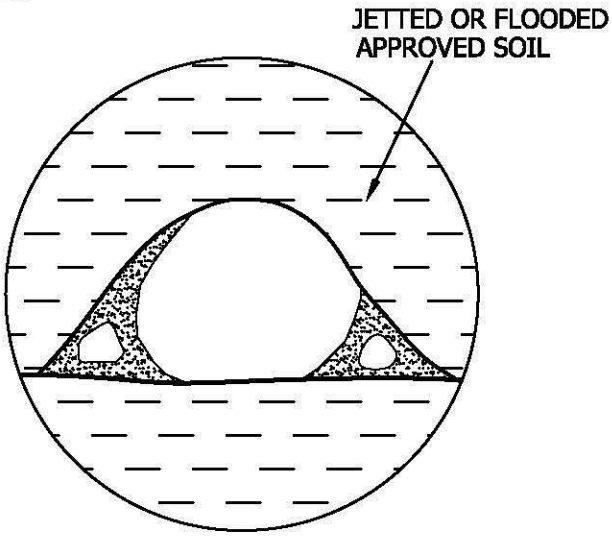

SECTION A-A'

- Oversize rock is larger than 8 inches in largest dimension.
- Backfill with approved soil jetted or flooded in place to fill all the voids.
- Do not bury rock within 10 feet of finish grade.
- Windrow of buried rock shall be parallel to the finished slope face.

PROFILE ALONG WINDROW

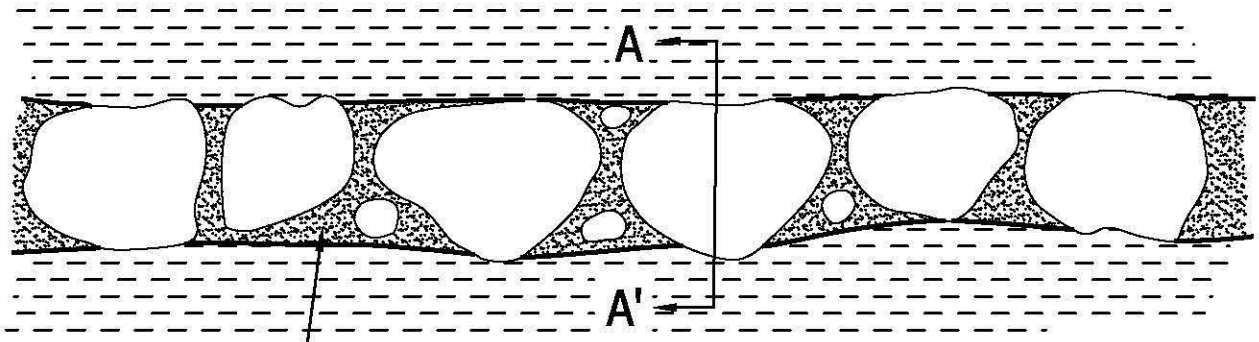

JETTED OR FLOODED
APPROVED SOIL

OVERSIZE ROCK DISPOSAL	GENERAL EARTHWORK AND GRADING SPECIFICATIONS STANDARD DETAILS B	Leighton

P:Drafting\templates\details\over-rock-disp.dwg (7/00)

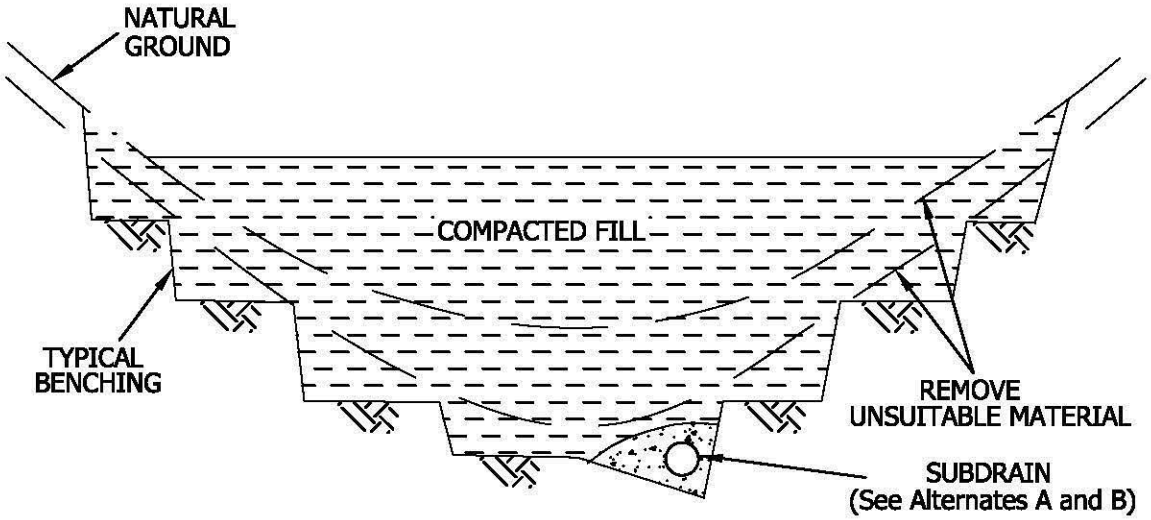

SUBDRAIN ALTERNATE A

PERFORATED PIPE SURROUNDED WITH FILTER MATERIAL

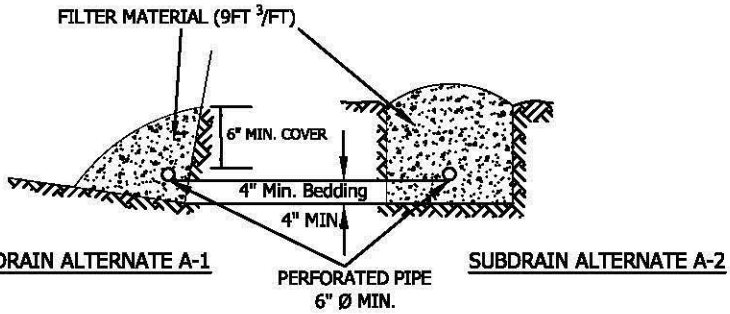

FILTER MATERIAL

FILTER MATERIAL SHALL BE CLASS 2 PERMEABLE MATERIAL PER STATE OF CALIFORNIA STANDARD SPECIFICATION, OR APPROVED ALTERNATE. CLASS 2 GRADING AS FOLLOWS:

Sieve Size	Percent Passing
1"	100
3/4"	90-100
3/8"	40-100
No. 4	25-40
No. 8	18-33
No. 30	5-15
No. 50	0-7
No. 200	0-3

SUBDRAIN ALTERNATE B

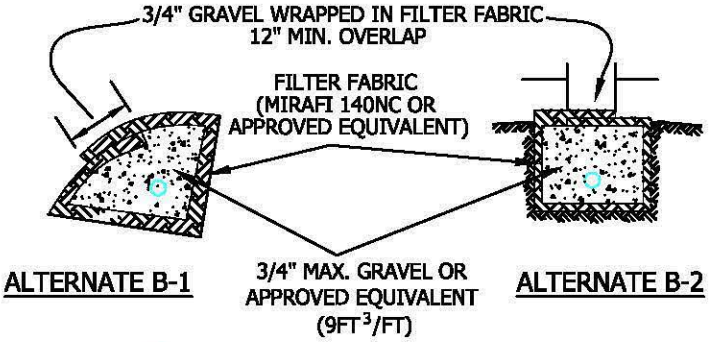

○ PERFORATED PIPE IS OPTIONAL PER GOVERNING AGENCY'S REQUIREMENTS

DETAIL OF CANYON SUBDRAIN TERMINAL

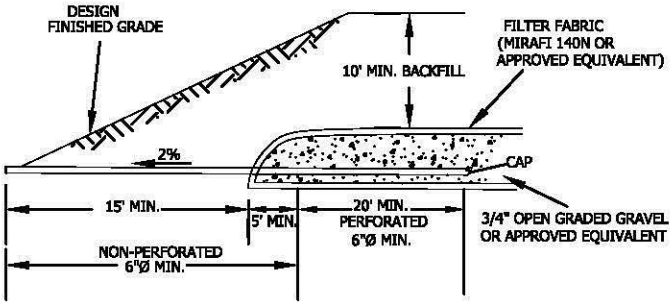

CANYON SUBDRAIN	GENERAL EARTHWORK AND GRADING SPECIFICATIONS STANDARD DETAILS C	Leighton

P:\Drafting\templates\details\canyon_drains.dwg (7/00)

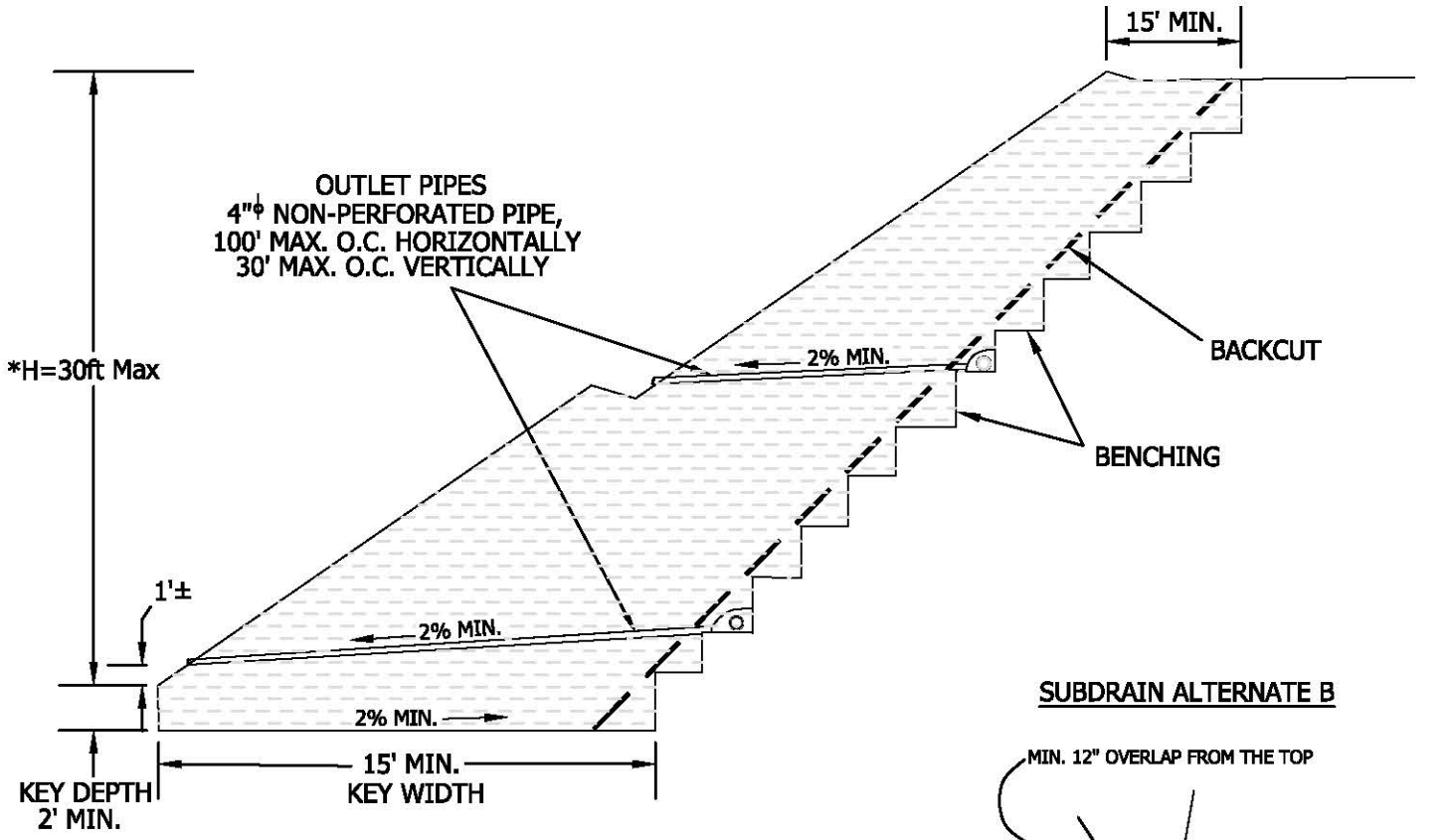

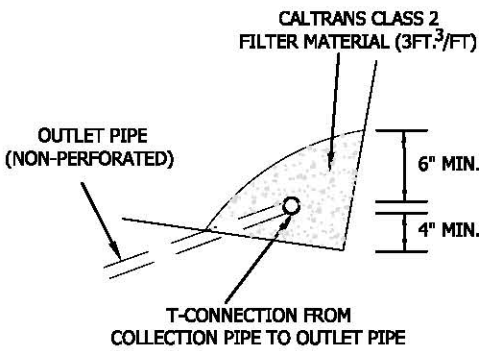

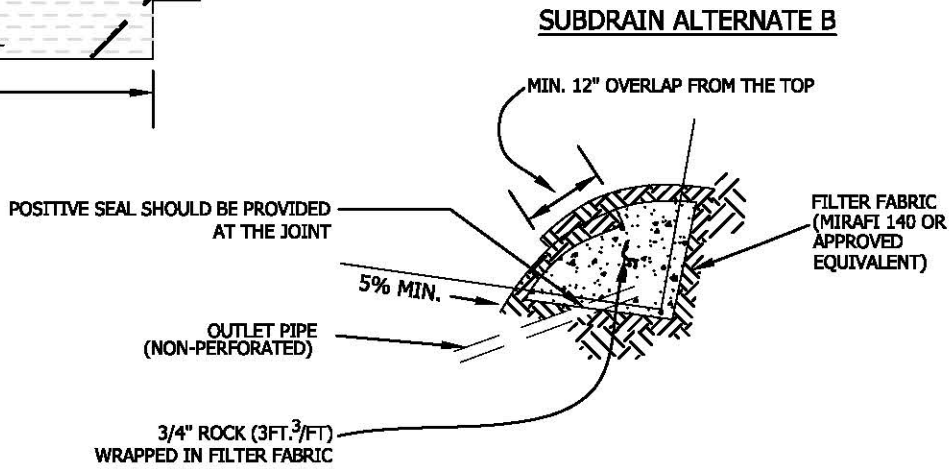

- SUBDRAIN INSTALLATION - Subdrain collector pipe shall be installed with perforations down or, unless otherwise designated by the geotechnical consultant. Outlet pipes shall be non-perforated pipe. The subdrain pipe shall have at least 8 perforations uniformly spaced per foot. Perforation shall be 1/4" to 1/2" if drilled holes are used. All subdrain pipes shall have a gradient at least 2% towards the outlet.
- SUBDRAIN PIPE - Subdrain pipe shall be ASTM D2751, ASTM D1527 (Schedule 40) or SDR 23.5 ABS pipe or ASTM D3034 (Schedule 40) or SDR 23.5 PVC pipe.
- All outlet pipe shall be placed in a trench and, after fill is placed above it, rodded to verify integrity.

* Slopes >30ft will require additional analysis/design

BUTTRESS OR REPLACEMENT FILL SUBDRAINS	GENERAL EARTHWORK AND GRADING SPECIFICATIONS STANDARD DETAILS D	Leighton

P:Drafting\templates\details\buttress_repl_sub.dwg (7/00)

CUT-FILL TRANSITION LOT OVEREXCAVATION

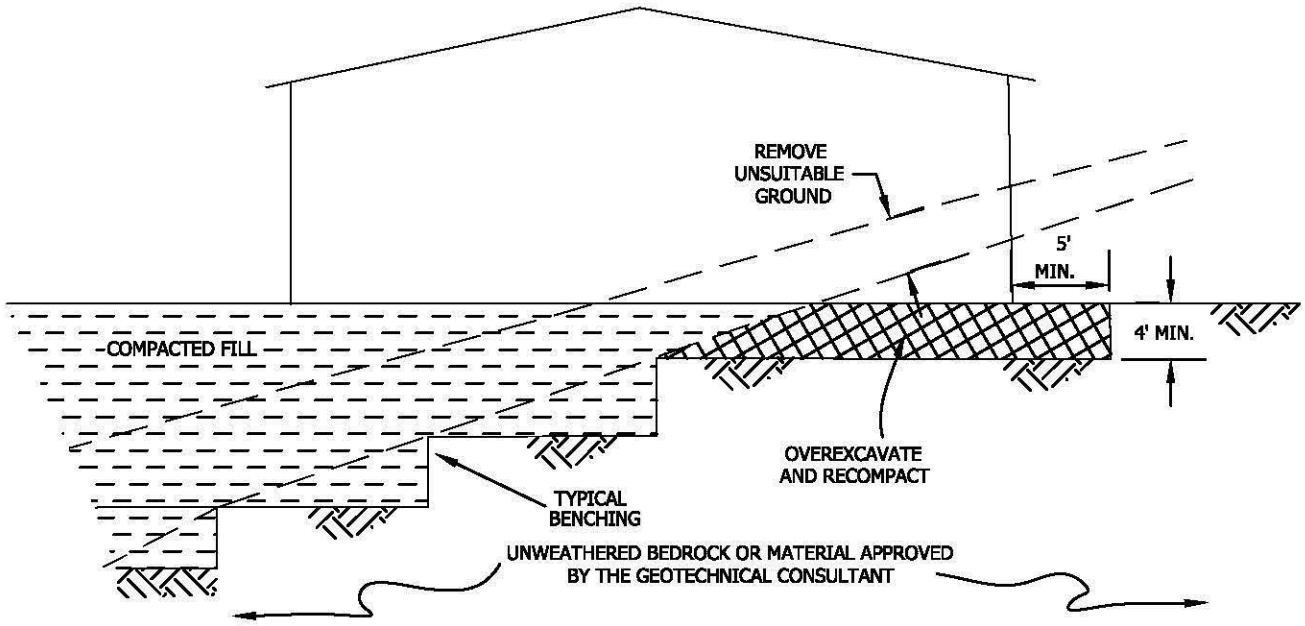

SIDE HILL FILL FOR CUT PAD

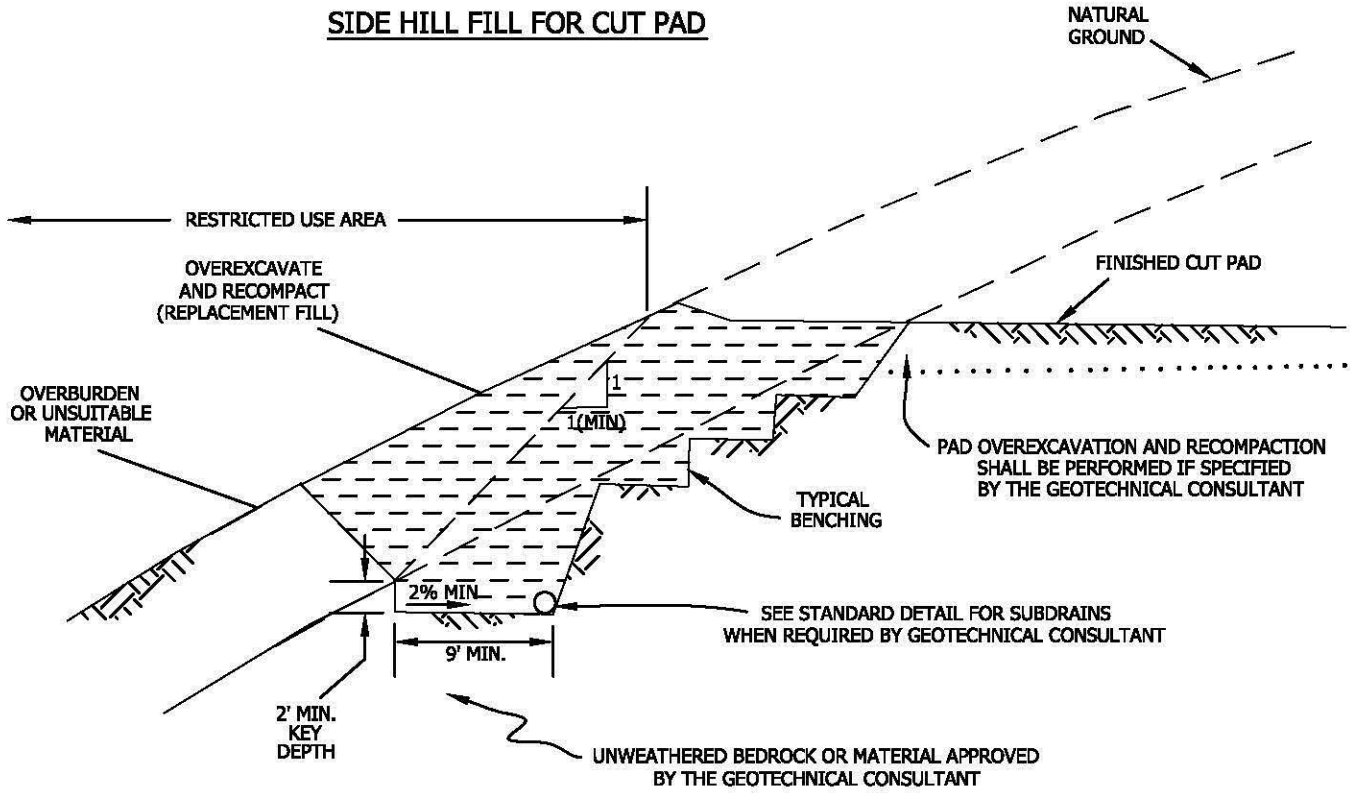

TRANSITION LOT FILLS AND SIDE HILL FILLS	GENERAL EARTHWORK AND GRADING SPECIFICATIONS STANDARD DETAILS E	Leighton

P:Drafting\templates\details\transition_fills.dwg (7/00)

SUBDRAIN OPTIONS AND BACKFILL WHEN NATIVE MATERIAL HAS EXPANSION INDEX OF ≤50

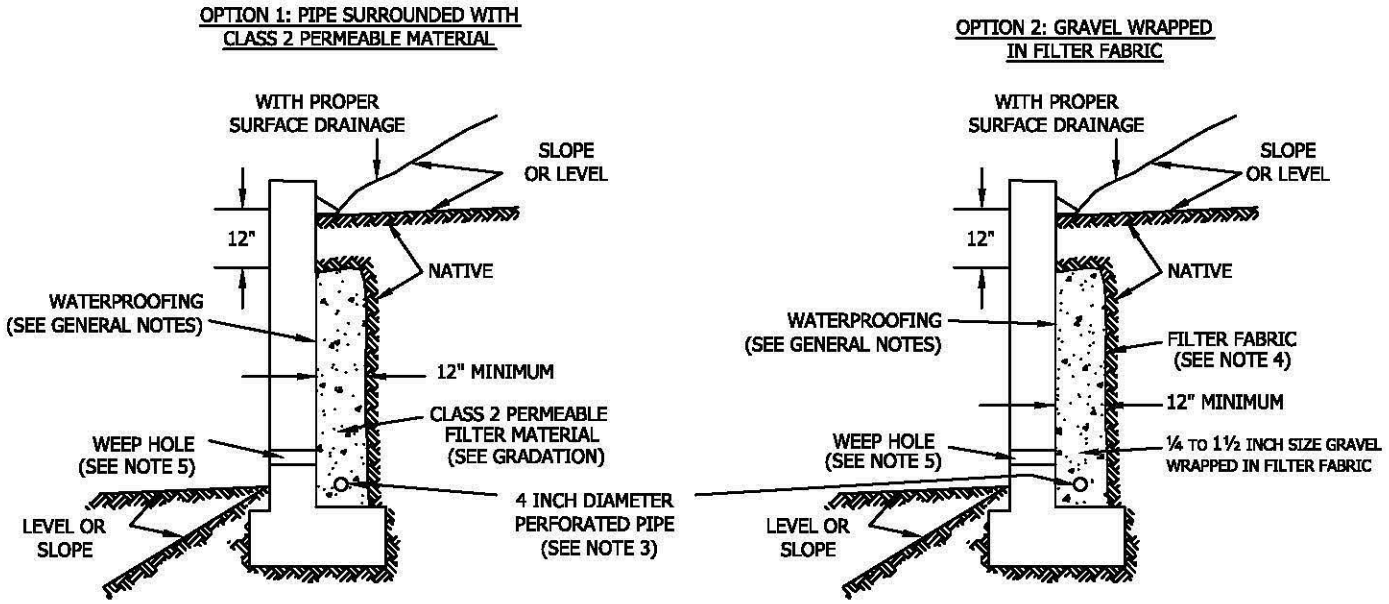

Class 2 Filter Permeable Material Gradation
Per Caltrans Specifications

Sieve Size	Percent Passing
1"	100
3/4"	90-100
3/8"	40-100
No. 4	25-40
No. 8	18-33
No. 30	5-15
No. 50	0-7
No. 200	0-3

GENERAL NOTES:

* Waterproofing should be provided where moisture nuisance problem through the wall is undesirable.
* Water proofing of the walls is not under purview of the geotechnical engineer
* All drains should have a gradient of 1 percent minimum
*Outlet portion of the subdrain should have a 4-inch diameter solid pipe discharged into a suitable disposal area designed by the project engineer. The subdrain pipe should be accessible for maintenance (rodding)
*Other subdrain backfill options are subject to the review by the geotechnical engineer and modification of design parameters.

Notes:
1) Sand should have a sand equivalent of 30 or greater and may be densified by water jetting.
2) 1 Cu. ft. per ft. of 1/4- to 1 1/2-inch size gravel wrapped in filter fabric
3) Pipe type should be ASTM D1527 Acrylonitrile Butadiene Styrene (ABS) SDR35 or ASTM D1785 Polyvinyl Chloride plastic (PVC), Schedule 40, Armco A2000 PVC, or approved equivalent. Pipe should be installed with perforations down. Perforations should be 3/8 inch in diameter placed at the ends of a 120-degree arc in two rows at 3-inch on center (staggered)
4) Filter fabric should be Mirafi 140NC or approved equivalent.
5) Weephole should be 3-inch minimum diameter and provided at 10-foot maximum intervals. If exposure is permitted, weepholes should be located 12 inches above finished grade. If exposure is not permitted such as for a wall adjacent to a sidewalk/curb, a pipe under the sidewalk to be discharged through the curb face or equivalent should be provided. For a basement-type wall, a proper subdrain outlet system should be provided.
6) Retaining wall plans should be reviewed and approved by the geotechnical engineer.
7) Walls over six feet in height are subject to a special review by the geotechnical engineer and modifications to the above requirements.

RETAINING WALL BACKFILL AND SUBDRAIN DETAIL FOR WALLS 6 FEET OR LESS IN HEIGHT

WHEN NATIVE MATERIAL HAS EXPANSION INDEX OF ≤50

Leighton

Figure

APPENDIX C

ASFE, Important Information Regarding Geotechnical Engineering Studies

Important Information About Your

Geotechnical Engineering Report

Subsurface problems are a principal cause of construction delays, cost overruns, claims, and disputes.

The following information is provided to help you manage your risks.

Geotechnical Services Are Performed for Specific Purposes, Persons, and Projects

Geotechnical engineers structure their services to meet the specific needs of their clients. A geotechnical engineering study conducted for a civil engineer may not fulfill the needs of a construction contractor or even another civil engineer. Because each geotechnical engineering study is unique, each geotechnical engineering report is unique, prepared *solely* for the client. No one except you should rely on your geotechnical engineering report without first conferring with the geotechnical engineer who prepared it. *And no one — not even you* — should apply the report for any purpose or project except the one originally contemplated.

Read the Full Report

Serious problems have occurred because those relying on a geotechnical engineering report did not read it all. Do not rely on an executive summary. Do not read selected elements only.

A Geotechnical Engineering Report Is Based on A Unique Set of Project-Specific Factors

Geotechnical engineers consider a number of unique, project-specific factors when establishing the scope of a study. Typical factors include: the client's goals, objectives, and risk management preferences; the general nature of the structure involved, its size, and configuration; the location of the structure on the site; and other planned or existing site improvements, such as access roads, parking lots, and underground utilities. Unless the geotechnical engineer who conducted the study specifically indicates otherwise, do not rely on a geotechnical engineering report that was:

- not prepared for you,
- not prepared for your project,
- not prepared for the specific site explored, or
- completed before important project changes were made.

Typical changes that can erode the reliability of an existing geotechnical engineering report include those that affect:

- the function of the proposed structure, as when it's changed from a parking garage to an office building, or from a light industrial plant to a refrigerated warehouse,
- elevation, configuration, location, orientation, or weight of the proposed structure,
- composition of the design team, or
- project ownership.

As a general rule, *always* inform your geotechnical engineer of project changes—even minor ones—and request an assessment of their impact. *Geotechnical engineers cannot accept responsibility or liability for problems that occur because their reports do not consider developments of which they were not informed.*

Subsurface Conditions Can Change

A geotechnical engineering report is based on conditions that existed at the time the study was performed. *Do not rely on a geotechnical engineering report* whose adequacy may have been affected by: the passage of time; by man-made events, such as construction on or adjacent to the site; or by natural events, such as floods, earthquakes, or groundwater fluctuations. *Always* contact the geotechnical engineer before applying the report to determine if it is still reliable. A minor amount of additional testing or analysis could prevent major problems.

Most Geotechnical Findings Are Professional Opinions

Site exploration identifies subsurface conditions only at those points where subsurface tests are conducted or samples are taken. Geotechnical engineers review field and laboratory data and then apply their professional judgment to render an opinion about subsurface conditions throughout the site. Actual subsurface conditions may differ—sometimes significantly—from those indicated in your report. Retaining the geotechnical engineer who developed your report to provide construction observation is the most effective method of managing the risks associated with unanticipated conditions.

A Report's Recommendations Are *Not* Final

Do not overrely on the construction recommendations included in your report. *Those recommendations are not final,* because geotechnical engineers develop them principally from judgment and opinion. Geotechnical engineers can finalize their recommendations only by observing actual

subsurface conditions revealed during construction. *The geotechnical engineer who developed your report cannot assume responsibility or liability for the report's recommendations if that engineer does not perform construction observation.*

A Geotechnical Engineering Report Is Subject to Misinterpretation

Other design team members' misinterpretation of geotechnical engineering reports has resulted in costly problems. Lower that risk by having your geotechnical engineer confer with appropriate members of the design team after submitting the report. Also retain your geotechnical engineer to review pertinent elements of the design team's plans and specifications. Contractors can also misinterpret a geotechnical engineering report. Reduce that risk by having your geotechnical engineer participate in prebid and preconstruction conferences, and by providing construction observation.

Do Not Redraw the Engineer's Logs

Geotechnical engineers prepare final boring and testing logs based upon their interpretation of field logs and laboratory data. To prevent errors or omissions, the logs included in a geotechnical engineering report should *never* be redrawn for inclusion in architectural or other design drawings. Only photographic or electronic reproduction is acceptable, *but recognize that separating logs from the report can elevate risk.*

Give Contractors a Complete Report and Guidance

Some owners and design professionals mistakenly believe they can make contractors liable for unanticipated subsurface conditions by limiting what they provide for bid preparation. To help prevent costly problems, give contractors the complete geotechnical engineering report, *but* preface it with a clearly written letter of transmittal. In that letter, advise contractors that the report was not prepared for purposes of bid development and that the report's accuracy is limited; encourage them to confer with the geotechnical engineer who prepared the report (a modest fee may be required) and/or to conduct additional study to obtain the specific types of information they need or prefer. A prebid conference can also be valuable. *Be sure contractors have sufficient time* to perform additional study. Only then might you be in a position to give contractors the best information available to you, while requiring them to at least share some of the financial responsibilities stemming from unanticipated conditions.

Read Responsibility Provisions Closely

Some clients, design professionals, and contractors do not recognize that geotechnical engineering is far less exact than other engineering disciplines. This lack of understanding has created unrealistic expectations that have led to disappointments, claims, and disputes. To help reduce the risk of such outcomes, geotechnical engineers commonly include a variety of explanatory provisions in their reports. Sometimes labeled "limitations" many of these provisions indicate where geotechnical engineers' responsibilities begin and end, to help others recognize their own responsibilities and risks. *Read these provisions closely.* Ask questions. Your geotechnical engineer should respond fully and frankly.

Geoenvironmental Concerns Are Not Covered

The equipment, techniques, and personnel used to perform a *geoenvironmental* study differ significantly from those used to perform a *geotechnical* study. For that reason, a geotechnical engineering report does not usually relate any geoenvironmental findings, conclusions, or recommendations; e.g., about the likelihood of encountering underground storage tanks or regulated contaminants. *Unanticipated environmental problems have led to numerous project failures.* If you have not yet obtained your own geoenvironmental information, ask your geotechnical consultant for risk management guidance. *Do not rely on an environmental report prepared for someone else.*

Obtain Professional Assistance To Deal with Mold

Diverse strategies can be applied during building design, construction, operation, and maintenance to prevent significant amounts of mold from growing on indoor surfaces. To be effective, all such strategies should be devised for the *express purpose* of mold prevention, integrated into a comprehensive plan, and executed with diligent oversight by a professional mold prevention consultant. Because just a small amount of water or moisture can lead to the development of severe mold infestations, a number of mold prevention strategies focus on keeping building surfaces dry. While groundwater, water infiltration, and similar issues may have been addressed as part of the geotechnical engineering study whose findings are conveyed in this report, the geotechnical engineer in charge of this project is not a mold prevention consultant; ***none of the services performed in connection with the geotechnical engineer's study were designed or conducted for the purpose of mold prevention. Proper implementation of the recommendations conveyed in this report will not of itself be sufficient to prevent mold from growing in or on the structure involved.***

Rely, on Your ASFE-Member Geotechncial Engineer for Additional Assistance

Membership in ASFE/The Best People on Earth exposes geotechnical engineers to a wide array of risk management techniques that can be of genuine benefit for everyone involved with a construction project. Confer with you ASFE-member geotechnical engineer for more information.

ASFE
The Best People on Earth

8811 Colesville Road/Suite G106, Silver Spring, MD 20910
Telephone: 301/565-2733 Facsimile: 301/589-2017
e-mail: info@asfe.org www.asfe.org

Copyright 2004 by ASFE, Inc. Duplication, reproduction, or copying of this document, in whole or in part, by any means whatsoever, is strictly prohibited, except with ASFE's specific written permission. Excerpting, quoting, or otherwise extracting wording from this document is permitted only with the express written permission of ASFE, and only for purposes of scholarly research or book review. Only members of ASFE may use this document as a complement to or as an element of a geotechnical engineering report. Any other firm, individual, or other entity that so uses this document without being an ASFE member could be committing negligent or intentional (fraudulent) misrepresentation.

IIGER08041.0MRP

APPENDIX A

References

Arabashi, Jay; Steve Klein, John Waggoner, John Townsend, 2003, Riverside Badlands Tunnel, Inland Feeder Project: The Challenge between Concept and Completion.

Blake, T. F., 2000a, EQSEARCH, Version 4.00, A Computer Program for the Estimation of Peak Horizontal Acceleration from Southern California Historical Earthquake Catalogs, Users Manual, 94pp., with update data, 2006.

Bryant, W. A. and Hart, E. W., 2007, Fault-Rupture Hazard Zones in California, Alquist-Priolo Earthquake Fault Zoning with Index to Earthquake Zones Maps: Department of Conservation, California Geologic Survey, Special Publication 42. Interim Revision.

California Building Code, 2010, Volumes 1-3.

California Geological Survey (formerly California Division of Mines and Geology), 1995, State of California Earthquake Fault Zones, El Casco Quadrangle, 7.5 Minute Series.

California Geological Survey (formerly California Division of Mines and Geology), 1995, State of California Earthquake Fault Zones, Sunnymead Quadrangle, 7.5 Minute Series.

California Geological Survey (formerly California Division of Mines and Geology), 1996, Probabilistic Seismic Hazard Assessment for the State of California, Open-File Report 96-08.

California Geological Survey, 1997, Guidelines for evaluating and mitigating seismic hazards in California: California Geological Survey, Special Publication 117, 74p., 7 chapters, Appendix A,B,C, and D. www.conservation.ca.gov/cgs

Dibblee, Thomas, W., Jr. 1981, South Coast Geological Society, Perris Quadrangle, Edited by Arthur R. Brown.

Dibblee, Thomas, W., Jr. 2003, Geologic Map of the El Casco Quadrangle, Riverside County, California, Edited by John A. Minch.

Eberhart/United Consultants, 2007, City of Moreno Valley Supplemental Fault Investigation Report Approval, Moreno Highlands Development, Moreno Valley, California, dated April 30, 2007.

Kahle, J.E., 1987. The San Jacinto Fault Zone (The Claremont, Casa Loma, and Related Faults) in the Lakeview and El Casco Quadrangles, Riverside County, California. California Division of mines and Geology Fault Evaluation Report FER-179. July 21, 1987.

Kendrick, K. J., McFadden, Les, and Morton, D.M., 1994, Soils and slip rates along the northern San Jacinto Fault, in McGill, S. F., and Ross, T. M., editors, Geological Investigations of an Active Margin: GSA, Cordilleran Section Guidebook, 27th Annual Meeting, San Bernardino, pages 146-151.

Kendrick, K. J., Morton, D. M.., Wells, S.G., and Simpson, R. W., 2002, Spatial and temporal deformation along the northern San Jacinto Fault, southern California: implications for slip rates: BSSA, vol. 92, no. 7, October 2002 issue.

Kendrick, K.J., 2005, Paleoseismicity of the Northern San Jacinto Fault, Colton and San Bernardino, Southern California; Preliminary Results, in Geological Society of America Abstracts with Programs, Vol. 37, No. 7, p. 559.

King, N.E., and Savage, J.C., 1983, Strain-rate profile across the Elsinore, San Jacinto and the San Andreas faults near Palm Springs, California, 1973-81: Geophysical Research Letters, v. 10, no. 1, p. 55-37.

Leighton and Associates, Inc., 1986, Preliminary Geotechnical Investigation for Environmental Impact Report Purposes, Proposed Moreno Valley International Trade Center, Moreno Valley, California, dated September 19, 1986.

Leighton and Associates, Inc., 1989, Summary of Soil Sampling and Analysis for 650+ Acre Site Located North of Alessandro Boulevard and East of Theodore Street, City of Moreno Valley, Riverside County, California, and Review of SWAT Report Performed on December 4, 1989 by Leighton and Associates, Inc. (L&A), Project No. 40890257-03, dated December 18, 1989.

Leighton and Associates, Inc., 1990, Supplemental Soil/Foundation Liquefaction Investigation, Moreno Highlands, City of Moreno Valley, California, Project no. 6890257-02, dated January 31, 1990.

Leighton and Associates, Inc., 2004, Preliminary Fault Investigation, Tentative Tract Map No. 32501, Moreno Highlands, City of Moreno Valley, California, Project No. 111061-103, dated December 3, 2004.

Leighton and Associates, Inc., 2006, Preliminary Geotechnical Investigation, Moreno Highlands Specific Plan Area, Southeast Corner of Highway 60 and Redlands

Boulevard, City of Moreno Valley, Riverside County, California, Project No. 111061-104, dated March 8, 2006.

Leighton and Associates, Inc., 2007a, Supplemental Fault Investigation, Moreno Highlands Development, City of Moreno Valley, California, Project No. 111061-107, dated February 15, 2007.

Leighton and Associates, Inc., 2007b, Preliminary Geotechnical Report, Tentative Parcel Map 35629, Moreno Valley, California, Project No. 111061-108, dated June 15, 2007.

Leighton and Associates, Inc., 2008a, Update Preliminary Geotechnical Report, Tentative Parcel Map 35629, Highland Fairview Corporate Park, City of Moreno Valley, California, Project No. 111061-116, dated April 30, 2008.

Leighton and Associates, Inc., 2008b, Response to Screencheck Draft Environmental Impact Report Review Comments with Respect to Seismic/Faulting, Highland Fairview Corporate Park, Tentative Parcel Map 35629, Moreno Valley, California, Project No. 111061-116, dated June 4, 2008.

Leighton and Associates, Inc., 2008c, Update Geotechnical Report, Moreno Highlands Specific Plan Area, Southeast Corner of Highway 60 and Redlands Boulevard, City of Moreno Valley, California, Project No. 111061-113, dated July 21, 2008.

Leighton and Associates, Inc. 2011,Preliminary Geotechnical Evaluation for Environmental Impact Report, “The Highlands Specific Plan,” South of Highway 60 between Redlands Boulevard and Gilman Springs Road, City of Moreno Valley, California, project No. 111061-126, dated December 13, 2011.

Leighton and Associates Inc., 2012, Supplemental Fault Investigation, Lee Property, Portion of World Logistics Center Specific Plan Area, City of Moreno Valley, California, Project No. 111061-127, dated March 20, 2012.

Lofgren, Ben E., and Rubin, Meyer, 1975, Radiocarbon Dates indicate rates of the San Jacinto Valley Graben, California: Journal Research v.s. Geological Survey, Vol. 3 No. 1.

Lofgren, Ben E., and Rubin, Meyer, 1976, Land subsidence and aquifer-system compactions in the San Jacinto Valley, Riverside County, California—progress report: Journal Research vs. Geological Survey, Vol. 4 No 1.

Lohr, L.S., 1980, Alquist-Priolo Special Studies Zone Fault Investigation for Parcel Map No. 16950, Job No. 87-80-12, dated December 16, 1980.

Mann, J.F., 1991, Ground Water Resources of Moreno Highlands dated August 30, 1991.

Morton, D.M., and Matti, J.C., 1993, Extension and contraction within an evolving divergent strike-slip fault complex: the San Andreas and San Jacinto fault zones at their convergence in southern California, in Powell, R.E., Weldon, R.J.II, and Matti, J.C., editors, The San Andreas fault system: displacement, palinspastic reconstruction, and geologic evolution: GSA, Memoir 178, p. 217-230.

Morton, D.M., 1974, Surface Deformation in part of the San Jacinto Valley, southern California, *Journal Research U.S. Geologic Survey*, vol. 5, no. 1, pages 117-124, Jan.-Feb. 1977.

Morton, D.M., 1994, Subsidence and ground fissures in the San Jacinto basin area, southern California, in U.S. Geological Survey Subsidence Interest Group Conference: U.S. Geological Survey Open-File Report 94-532, p.29-31.

National Center for Earthquake Engineering Research, (NCEER), 1997, Proceedings of the NCEER Workshop of Liquefaction Resistance of Soils, Technical Report NCEER-97-0022, dated December 31, 1997.

Parsons Brinkerhoff, 2012, Limits of Environmental Analysis, Fig. 3, dated Feb. 2012.

Park, S.K., and Pendergraft, D., Stephenson, W.J., Shedlock, K.M., and Lee, T.C., 1995 Delineation of intrabasin structure in a dilational jog of the San Jacinto fault zone, southern California, *Journal of Geophysical Research*, vol. 100, no. B1, pages 691-702, January 10, 1995.

Pradel, D., 1998, Procedure to Evaluate Earthquake Induced Settlements in Dry Sandy Soils, ASCE Journal of Geotechnical and Geoenvironmental Engineering, Vol. 124, No. 4, dated April 1998.

Riverside County, Department of Transportation and Land Management, Building and Safety Department, Planning Department, Transportation Department, Technical Guidelines for Review of Geotechnical and Geologic Reports, 2000.

Riverside County, 2003, Riverside County General Plan Safety Element and Appendix H, Adopted October 7, 2003, Geotechnical Report (Technical Background Document).

Rockwell, T., et al, 2003, 3,000 years of ground-rupturing earthquakes in the Anza Seismic Gap, San Jacinto Fault, southern California: Time to shake it up?, paper presented at 2003 SCEC Annual Meeting, South. Calif. Earthquake Cent., Oxnard, Calif.

Southern California Earthquake Center (SCEC), 2011, San Jacinto Fault Zone, www.data.scec.org/fault_index/sanjacin.html, website viewed on November 15, 2011.

Tokimatsu, K., and Seed, H.B., 1987, Evaluation of Settlements in Sands Due to Earthquake Shaking, ASCE Journal of Geotechnical Engineering, Vol. 113, No. 8, dated August 1987.

Toppozada, T.R., Borchardt, G., Hallstrom, C., Johnson, C., Per, R., and Lagario, H. 1993, Planning scenario for a major earthquake on the San Jacinto fault Riverside and San Bernardino Counties, California: California Geological Survey, Special Publication 102, 219 p.

Von Hake, Carl A., Earthquake Information Bulletin, Volume 3, Number 2, March - April 1971.

United States Geological Survey, (USGS), 2006, Geologic Map of the San Bernardino and Santa Ana 30'x60' quadrangles, California, Version 1.0, Open File Report 2006-1217.

United States Geological Survey, (U.S.G.S), 2007, Complete Report for San Jacinto fault, San Jacinto Valley Section (Class A) No. 125b, http://earthquakes.usgs.gov/regional/qfaults, website viewed on November 15, 2011.

United States Geological Survey and California Geologic Survey, 2006, Quaternary fault and fold database for the United States, accessed May 19, 2011 from USGS web site: http//earthquakes.usgs.gov/regional/qfaults/

United States Geological Survey, 2011, A Computer Program Published by USGS to calculate Seismic Hazard Curves and Response and Design Parameters based on ASCE 7-05 seismic procedures, Version 5.1.0, Revision ed Feb 2011.

WGCEP - Working Group on California Earthquake Probabilities, 1995, Seismic Hazards in Southern California: Probable Earthquake Probabilities, Bull. Seismol. Soc. Amer., Vol. 85, No. 2, pp 379-439.

APPENDIX B

General Earthwork and Grading Specifications

EARTHWORK AND GRADING SPECIFICATIONS

TABLE OF CONTENTS

Section		Page
1.0	GENERAL	1
1.1	Intent	1
1.2	The Geotechnical Consultant of Record	1
1.3	The Earthwork Contractor	1
2.0	PREPARATION OF AREAS TO BE FILLED	2
2.1	Clearing and Grubbing	2
2.2	Processing	3
2.3	Overexcavation	3
2.4	Benching	3
2.5	Evaluation/Acceptance of Fill Areas	3
3.0	FILL MATERIAL	4
3.1	General	4
3.2	Oversize	4
3.3	Import	4
4.0	FILL PLACEMENT AND COMPACTION	4
4.1	Fill Layers	4
4.2	Fill Moisture Conditioning	5
4.3	Compaction of Fill	5
4.4	Compaction of Fill Slopes	5
4.5	Compaction Testing	5
4.6	Frequency of Compaction Testing	5
4.7	Compaction Test Locations	6
5.0	SUBDRAIN INSTALLATION	6
6.0	EXCAVATION	6
7.0	TRENCH BACKFILLS	6
7.1	Safety	6
7.2	Bedding & Backfill	7
7.3	Lift Thickness	7
7.4	Observation and Testing	7

STANDARD DETAILS

A - Keying and Benching	Rear of Text
B - Oversize Rock Disposal	Rear of Text
C - Canyon Subdrains	Rear of Text
D - Buttress or Replacement Fill Subdrains	Rear of Text
E - Transition Lot Fills and Side Hill Fills	Rear of Text
Retaining Wall	Rear of Text

1.0 General

1.1 Intent

These General Earthwork and Grading Specifications are for the grading and earthwork shown on the approved grading plan(s) and/or indicated in the geotechnical report(s). These Specifications are a part of the recommendations contained in the geotechnical report(s). In case of conflict, the specific recommendations in the geotechnical report shall supersede these more general Specifications. Observations of the earthwork by the project Geotechnical Consultant during the course of grading may result in new or revised recommendations that could supersede these specifications or the recommendations in the geotechnical report(s).

1.2 The Geotechnical Consultant of Record

Prior to commencement of work, the owner shall employ the Geotechnical Consultant of Record (Geotechnical Consultant). The Geotechnical Consultants shall be responsible for reviewing the approved geotechnical report(s) and accepting the adequacy of the preliminary geotechnical findings, conclusions, and recommendations prior to the commencement of the grading.

Prior to commencement of grading, the Geotechnical Consultant shall review the "work plan" prepared by the Earthwork Contractor (Contractor) and schedule sufficient personnel to perform the appropriate level of observation, mapping, and compaction testing.

During the grading and earthwork operations, the Geotechnical Consultant shall observe, map, and document the subsurface exposures to verify the geotechnical design assumptions. If the observed conditions are found to be significantly different than the interpreted assumptions during the design phase, the Geotechnical Consultant shall inform the owner, recommend appropriate changes in design to accommodate the observed conditions, and notify the review agency where required. Subsurface areas to be geotechnically observed, mapped, elevations recorded, and/or tested include natural ground after it has been cleared for receiving fill but before fill is placed, bottoms of all "remedial removal" areas, all key bottoms, and benches made on sloping ground to receive fill.

The Geotechnical Consultant shall observe the moisture-conditioning and processing of the subgrade and fill materials and perform relative compaction testing of fill to determine the attained level of compaction. The Geotechnical Consultant shall provide the test results to the owner and the Contractor on a routine and frequent basis.

1.3 The Earthwork Contractor

The Earthwork Contractor (Contractor) shall be qualified, experienced, and knowledgeable in earthwork logistics, preparation and processing of ground to receive fill, moisture-conditioning and processing of fill, and compacting fill. The Contractor shall review and accept the plans, geotechnical report(s), and these Specifications prior to commencement of grading. The Contractor shall be solely responsible for performing the grading in accordance with the plans and specifications.

The Contractor shall prepare and submit to the owner and the Geotechnical Consultant a work plan that indicates the sequence of earthwork grading, the number of "spreads" of work and the estimated quantities of daily earthwork contemplated for the site prior to commencement of grading. The Contractor shall inform the owner and the Geotechnical Consultant of changes in work schedules and updates to the work plan at least 24 hours in advance of such changes so that appropriate observations and tests can be planned and accomplished. The Contractor shall not assume that the Geotechnical Consultant is aware of all grading operations.

The Contractor shall have the sole responsibility to provide adequate equipment and methods to accomplish the earthwork in accordance with the applicable grading codes and agency ordinances, these Specifications, and the recommendations in the approved geotechnical report(s) and grading plan(s). If, in the opinion of the Geotechnical Consultant, unsatisfactory conditions, such as unsuitable soil, improper moisture condition, inadequate compaction, insufficient buttress key size, adverse weather, etc., are resulting in a quality of work less than required in these specifications, the Geotechnical Consultant shall reject the work and may recommend to the owner that construction be stopped until the conditions are rectified.

2.0 Preparation of Areas to be Filled

2.1 Clearing and Grubbing

Vegetation, such as brush, grass, roots, and other deleterious material shall be sufficiently removed and properly disposed of in a method acceptable to the owner, governing agencies, and the Geotechnical Consultant.

The Geotechnical Consultant shall evaluate the extent of these removals depending on specific site conditions. Earth fill material shall not contain more than 1 percent of organic materials (by volume). No fill lift shall contain more than 5 percent of organic matter. Nesting of the organic materials shall not be allowed.

If potentially hazardous materials are encountered, the Contractor shall stop work in the affected area, and a hazardous material specialist shall be informed immediately for proper evaluation and handling of these materials prior to continuing to work in that area.

As presently defined by the State of California, most refined petroleum products (gasoline, diesel fuel, motor oil, grease, coolant, etc.) have chemical constituents that are considered to be hazardous waste. As such, the indiscriminate dumping or spillage of these fluids onto the ground may constitute a misdemeanor, punishable by fines and/or imprisonment, and shall not be allowed.

2.2 Processing

Existing ground that has been declared satisfactory for support of fill by the Geotechnical Consultant shall be scarified to a minimum depth of 6 inches. Existing ground that is not satisfactory shall be overexcavated as specified in the following section. Scarification shall continue until soils are broken down and free of large clay lumps or clods and the working surface is reasonably uniform, flat, and free of uneven features that would inhibit uniform compaction.

2.3 Overexcavation

In addition to removals and overexcavations recommended in the approved geotechnical report(s) and the grading plan, soft, loose, dry, saturated, spongy, organic-rich, highly fractured or otherwise unsuitable ground shall be overexcavated to competent ground as evaluated by the Geotechnical Consultant during grading.

2.4 Benching

Where fills are to be placed on ground with slopes steeper than 5:1 (horizontal to vertical units), the ground shall be stepped or benched. Please see the Standard Details for a graphic illustration. The lowest bench or key shall be a minimum of 15 feet wide and at least 2 feet deep, into competent material as evaluated by the Geotechnical Consultant. Other benches shall be excavated a minimum height of 4 feet into competent material or as otherwise recommended by the Geotechnical Consultant. Fill placed on ground sloping flatter than 5:1 shall also be benched or otherwise overexcavated to provide a flat subgrade for the fill.

2.5 Evaluation/Acceptance of Fill Areas

All areas to receive fill, including removal and processed areas, key bottoms, and benches, shall be observed, mapped, elevations recorded, and/or tested prior to being accepted by the Geotechnical Consultant as suitable to receive fill. The Contractor shall obtain a written acceptance from the Geotechnical Consultant

prior to fill placement. A licensed surveyor shall provide the survey control for determining elevations of processed areas, keys, and benches.

3.0 Fill Material

3.1 General

Material to be used as fill shall be essentially free of organic matter and other deleterious substances evaluated and accepted by the Geotechnical Consultant prior to placement. Soils of poor quality, such as those with unacceptable gradation, high expansion potential, or low strength shall be placed in areas acceptable to the Geotechnical Consultant or mixed with other soils to achieve satisfactory fill material.

3.2 Oversize

Oversize material defined as rock, or other irreducible material with a maximum dimension greater than 8 inches, shall not be buried or placed in fill unless location, materials, and placement methods are specifically accepted by the Geotechnical Consultant. Placement operations shall be such that nesting of oversized material does not occur and such that oversize material is completely surrounded by compacted or densified fill. Oversize material shall not be placed within 10 vertical feet of finish grade or within 2 feet of future utilities or underground construction.

3.3 Import

If importing of fill material is required for grading, proposed import material shall meet the requirements of Section 3.1. The potential import source shall be given to the Geotechnical Consultant at least 48 hours (2 working days) before importing begins so that its suitability can be determined and appropriate tests performed.

4.0 Fill Placement and Compaction

4.1 Fill Layers

Approved fill material shall be placed in areas prepared to receive fill (per Section 3.0) in near-horizontal layers not exceeding 8 inches in loose thickness. The Geotechnical Consultant may accept thicker layers if testing indicates the grading procedures can adequately compact the thicker layers. Each layer shall be spread evenly and mixed thoroughly to attain relative uniformity of material and moisture throughout.

4.2 Fill Moisture Conditioning

Fill soils shall be watered, dried back, blended, and/or mixed, as necessary to attain a relatively uniform moisture content at or slightly over optimum. Maximum density and optimum soil moisture content tests shall be performed in accordance with the American Society of Testing and Materials (ASTM Test Method D1557).

4.3 Compaction of Fill

After each layer has been moisture-conditioned, mixed, and evenly spread, it shall be uniformly compacted to not less than 90 percent of maximum dry density (ASTM Test Method D1557). Compaction equipment shall be adequately sized and be either specifically designed for soil compaction or of proven reliability to efficiently achieve the specified level of compaction with uniformity.

4.4 Compaction of Fill Slopes

In addition to normal compaction procedures specified above, compaction of slopes shall be accomplished by backrolling of slopes with sheepsfoot rollers at increments of 3 to 4 feet in fill elevation, or by other methods producing satisfactory results acceptable to the Geotechnical Consultant. Upon completion of grading, relative compaction of the fill, out to the slope face, shall be at least 90 percent of maximum density per ASTM Test Method D1557.

4.5 Compaction Testing

Field-tests for moisture content and relative compaction of the fill soils shall be performed by the Geotechnical Consultant. Location and frequency of tests shall be at the Consultant's discretion based on field conditions encountered. Compaction test locations will not necessarily be selected on a random basis. Test locations shall be selected to verify adequacy of compaction levels in areas that are judged to be prone to inadequate compaction (such as close to slope faces and at the fill/bedrock benches).

4.6 Frequency of Compaction Testing

Tests shall be taken at intervals not exceeding 2 feet in vertical rise and/or 1,000 cubic yards of compacted fill soils embankment. In addition, as a guideline, at least one test shall be taken on slope faces for each 5,000 square feet of slope face and/or each 10 feet of vertical height of slope. The Contractor shall assure that fill construction is such that the testing schedule can be accomplished by the Geotechnical Consultant. The Contractor shall stop or slow down the earthwork construction if these minimum standards are not met.

4.7 Compaction Test Locations

The Geotechnical Consultant shall document the approximate elevation and horizontal coordinates of each test location. The Contractor shall coordinate with the project surveyor to assure that sufficient grade stakes are established so that the Geotechnical Consultant can determine the test locations with sufficient accuracy. At a minimum, two grade stakes within a horizontal distance of 100 feet and vertically less than 5 feet apart from potential test locations shall be provided.

5.0 Subdrain Installation

Subdrain systems shall be installed in accordance with the approved geotechnical report(s), the grading plan, and the Standard Details. The Geotechnical Consultant may recommend additional subdrains and/or changes in subdrain extent, location, grade, or material depending on conditions encountered during grading. All subdrains shall be surveyed by a land surveyor/civil engineer for line and grade after installation and prior to burial. Sufficient time should be allowed by the Contractor for these surveys.

6.0 Excavation

Excavations, as well as over-excavation for remedial purposes, shall be evaluated by the Geotechnical Consultant during grading. Remedial removal depths shown on geotechnical plans are estimates only. The actual extent of removal shall be determined by the Geotechnical Consultant based on the field evaluation of exposed conditions during grading. Where fill-over-cut slopes are to be graded, the cut portion of the slope shall be made, evaluated, and accepted by the Geotechnical Consultant prior to placement of materials for construction of the fill portion of the slope, unless otherwise recommended by the Geotechnical Consultant.

7.0 Trench Backfills

7.1 Safety

The Contractor shall follow all OSHA and Cal/OSHA requirements for safety of trench excavations.

7.2 Bedding and Backfill

All bedding and backfill of utility trenches shall be performed in accordance with the applicable provisions of Standard Specifications of Public Works Construction. Bedding material shall have a Sand Equivalent greater than 30 (SE>30). The bedding shall be placed to 1 foot over the top of the conduit and densified by jetting. Backfill shall be placed and densified to a minimum of 90 percent of relative compaction from 1 foot above the top of the conduit to the surface.

The Geotechnical Consultant shall test the trench backfill for relative compaction. At least one test should be made for every 300 feet of trench and 2 feet of fill.

7.3 Lift Thickness

Lift thickness of trench backfill shall not exceed those allowed in the Standard Specifications of Public Works Construction unless the Contractor can demonstrate to the Geotechnical Consultant that the fill lift can be compacted to the minimum relative compaction by his alternative equipment and method.

7.4 Observation and Testing

The jetting of the bedding around the conduits shall be observed by the Geotechnical Consultant.

FILL SLOPE

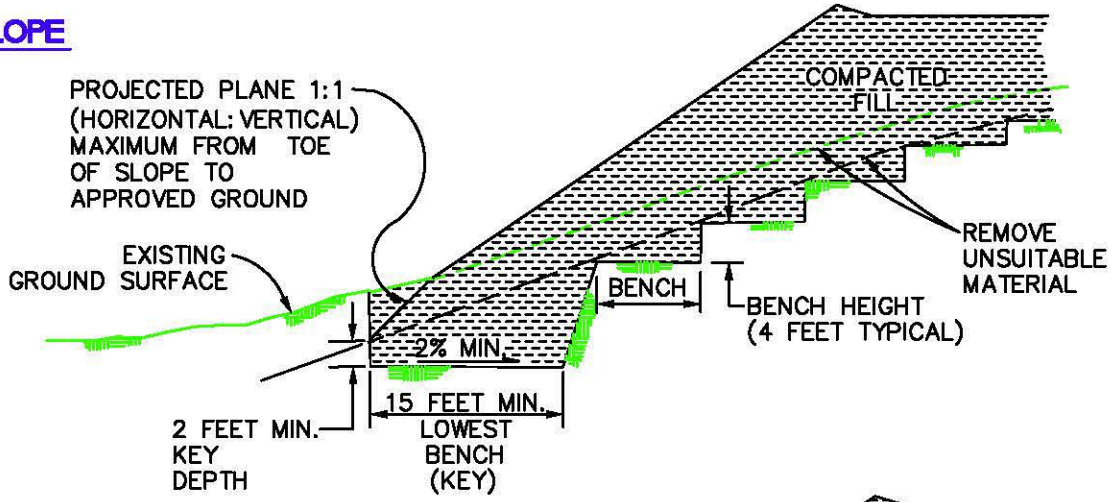

FILL-OVER-CUT SLOPE

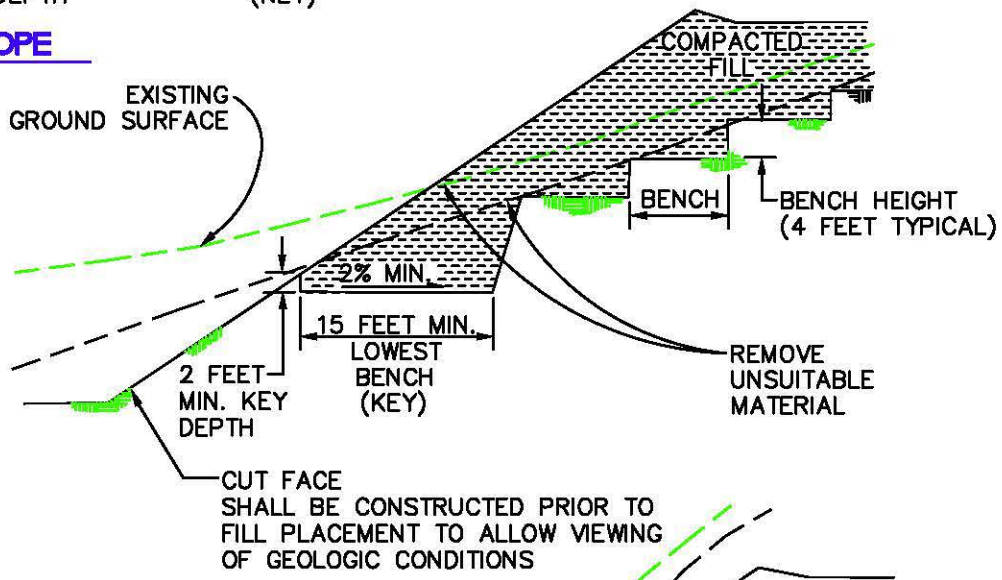

CUT-OVER-FILL SLOPE

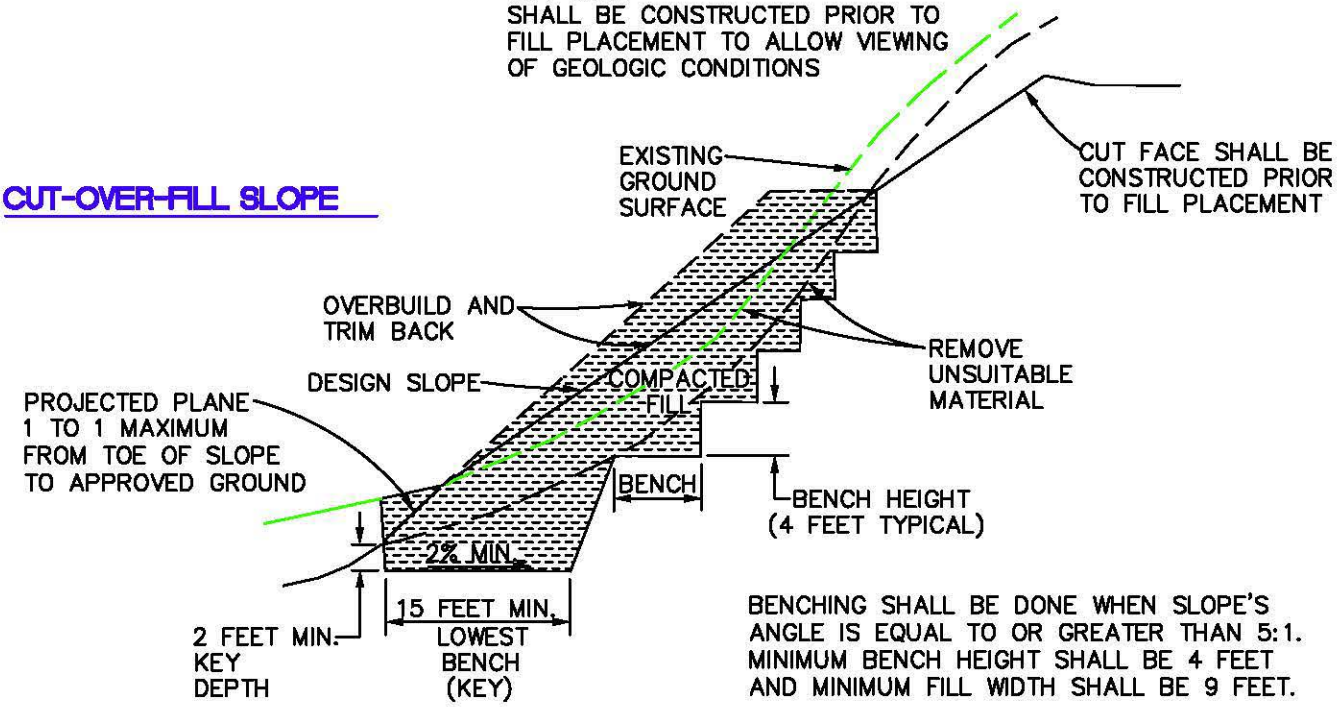

BENCHING SHALL BE DONE WHEN SLOPE'S ANGLE IS EQUAL TO OR GREATER THAN 5:1. MINIMUM BENCH HEIGHT SHALL BE 4 FEET AND MINIMUM FILL WIDTH SHALL BE 9 FEET.

KEYING AND BENCHING	GENERAL EARTHWORK AND GRADING SPECIFICATIONS STANDARD DETAILS A	Leighton

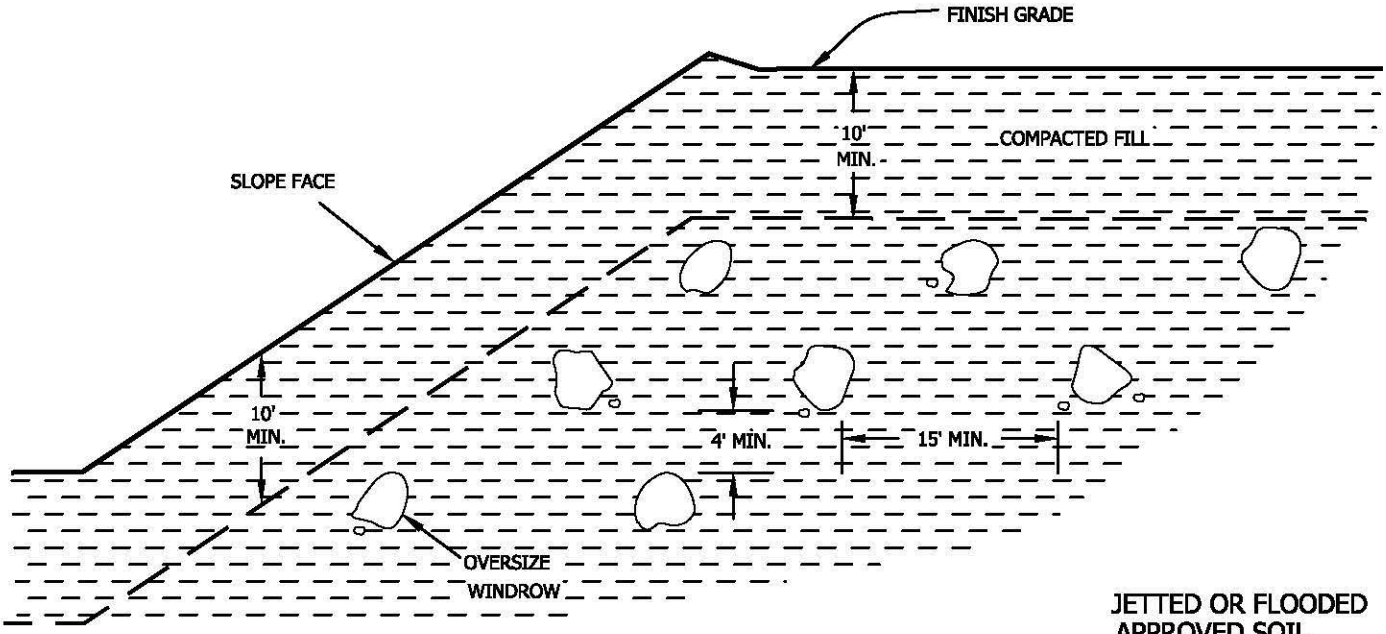

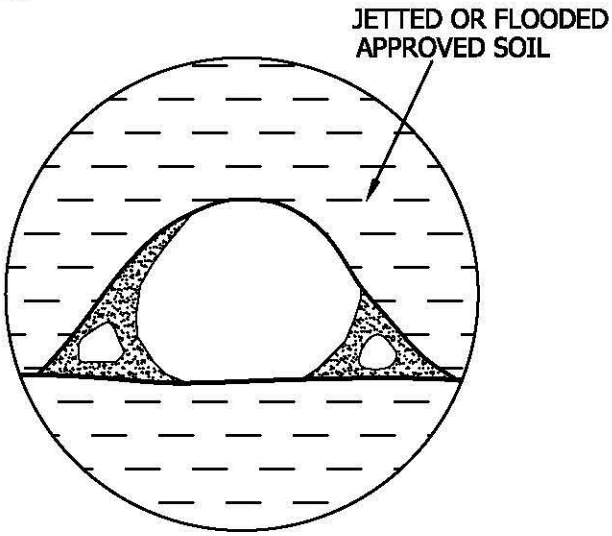

SECTION A-A'

- Oversize rock is larger than 8 inches in largest dimension.
- Backfill with approved soil jetted or flooded in place to fill all the voids.
- Do not bury rock within 10 feet of finish grade.
- Windrow of buried rock shall be parallel to the finished slope face.

PROFILE ALONG WINDROW

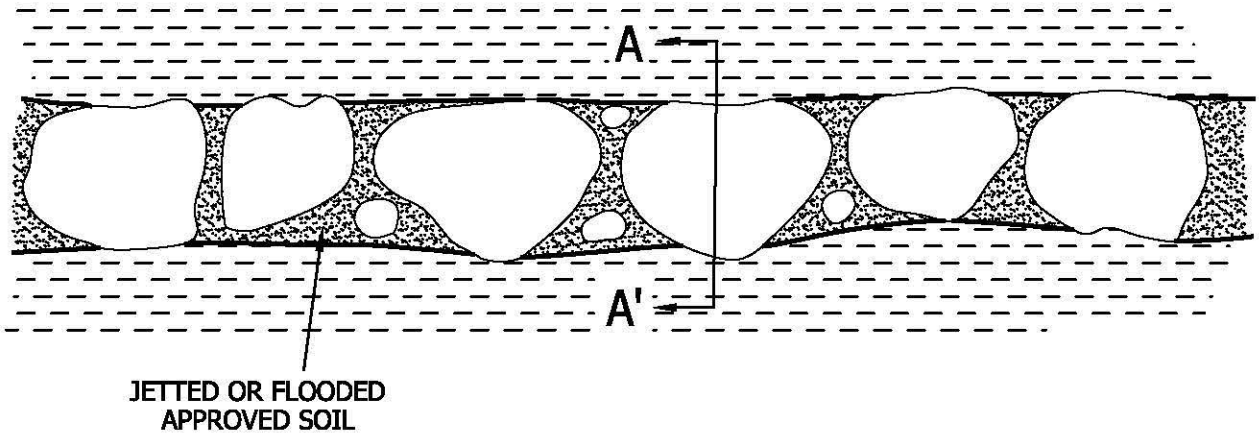

OVERSIZE ROCK DISPOSAL	GENERAL EARTHWORK AND GRADING SPECIFICATIONS STANDARD DETAILS B	Leighton

P:Drafting\templates\details\over-rock-disp.dwg (7/00)

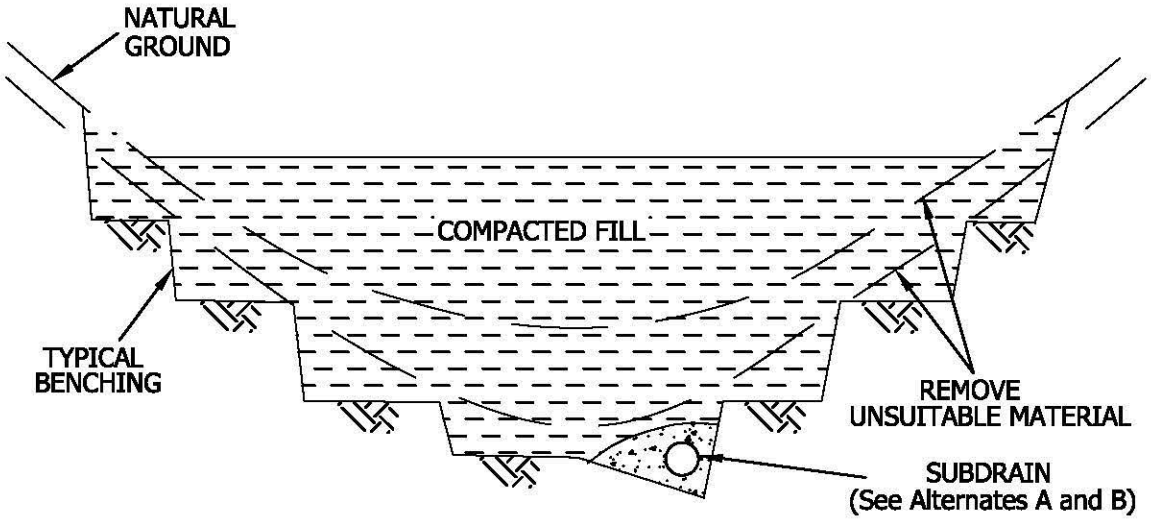

SUBDRAIN ALTERNATE A

PERFORATED PIPE SURROUNDED WITH FILTER MATERIAL

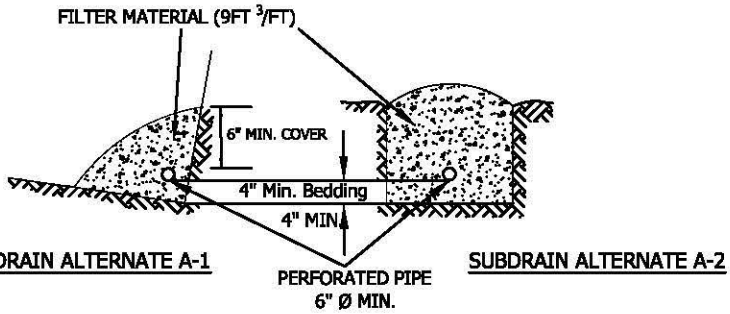

FILTER MATERIAL

FILTER MATERIAL SHALL BE CLASS 2 PERMEABLE MATERIAL PER STATE OF CALIFORNIA STANDARD SPECIFICATION, OR APPROVED ALTERNATE. CLASS 2 GRADING AS FOLLOWS:

Sieve Size	Percent Passing
1"	100
3/4"	90-100
3/8"	40-100
No. 4	25-40
No. 8	18-33
No. 30	5-15
No. 50	0-7
No. 200	0-3

SUBDRAIN ALTERNATE B

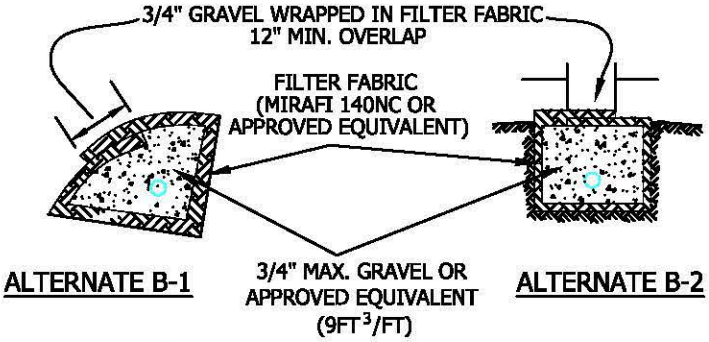

○ PERFORATED PIPE IS OPTIONAL PER GOVERNING AGENCY'S REQUIREMENTS

DETAIL OF CANYON SUBDRAIN TERMINAL

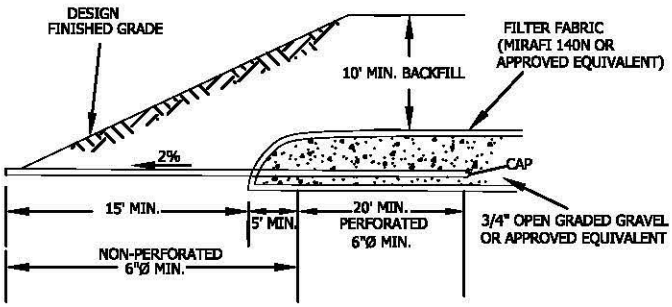

CANYON SUBDRAIN	GENERAL EARTHWORK AND GRADING SPECIFICATIONS STANDARD DETAILS C	Leighton

P:\Drafting\templates\details\canyon_drains.dwg (7/00)

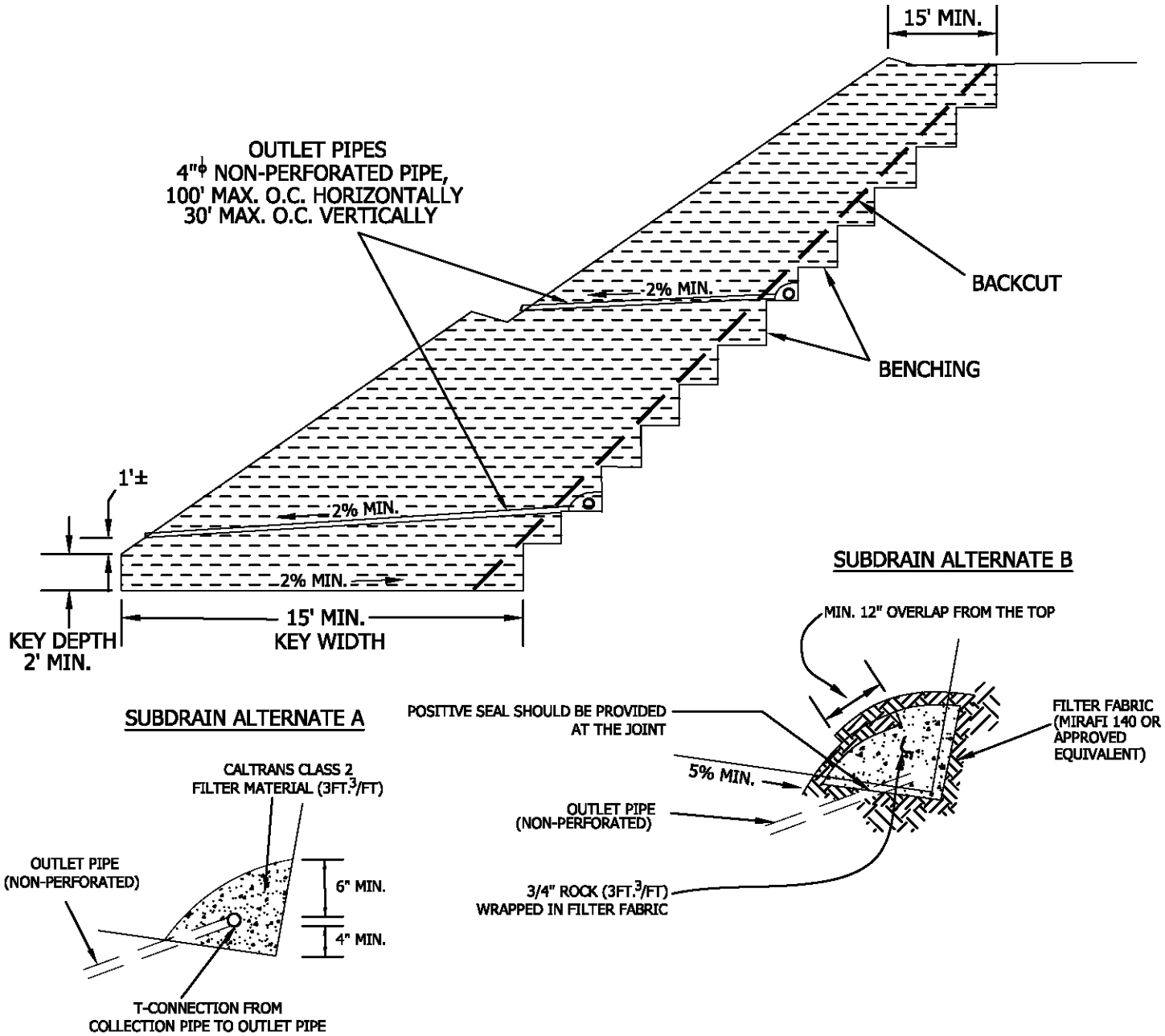

- SUBDRAIN INSTALLATION - Subdrain collector pipe shall be installed with perforations down or, unless otherwise designated by the geotechnical consultant. Outlet pipes shall be non-perforated pipe. The subdrain pipe shall have at least 8 perforations uniformly spaced per foot. Perforation shall be 1/4" to 1/2" if drilled holes are used. All subdrain pipes shall have a gradient at least 2% towards the outlet.
- SUBDRAIN PIPE - Subdrain pipe shall be ASTM D2751, ASTM D1527 (Schedule 40) or SDR 23.5 ABS pipe or ASTM D3034 (Schedule 40) or SDR 23.5 PVC pipe.
- All outlet pipe shall be placed in a trench and, after fill is placed above it, rodded to verify integrity.

BUTTRESS OR REPLACEMENT FILL SUBDRAINS	GENERAL EARTHWORK AND GRADING SPECIFICATIONS STANDARD DETAILS D	Leighton

P:Drafting\templates\details\buttress_repl_sub.dwg (7/00)

CUT-FILL TRANSITION LOT OVEREXCAVATION

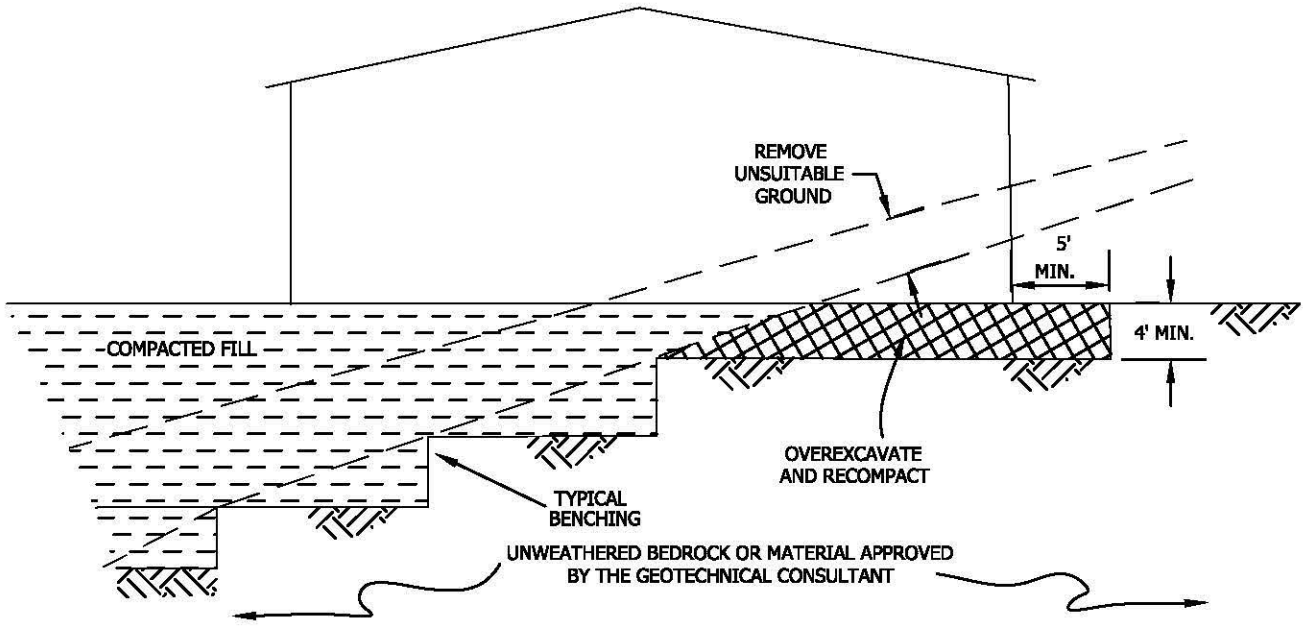

SIDE HILL FILL FOR CUT PAD

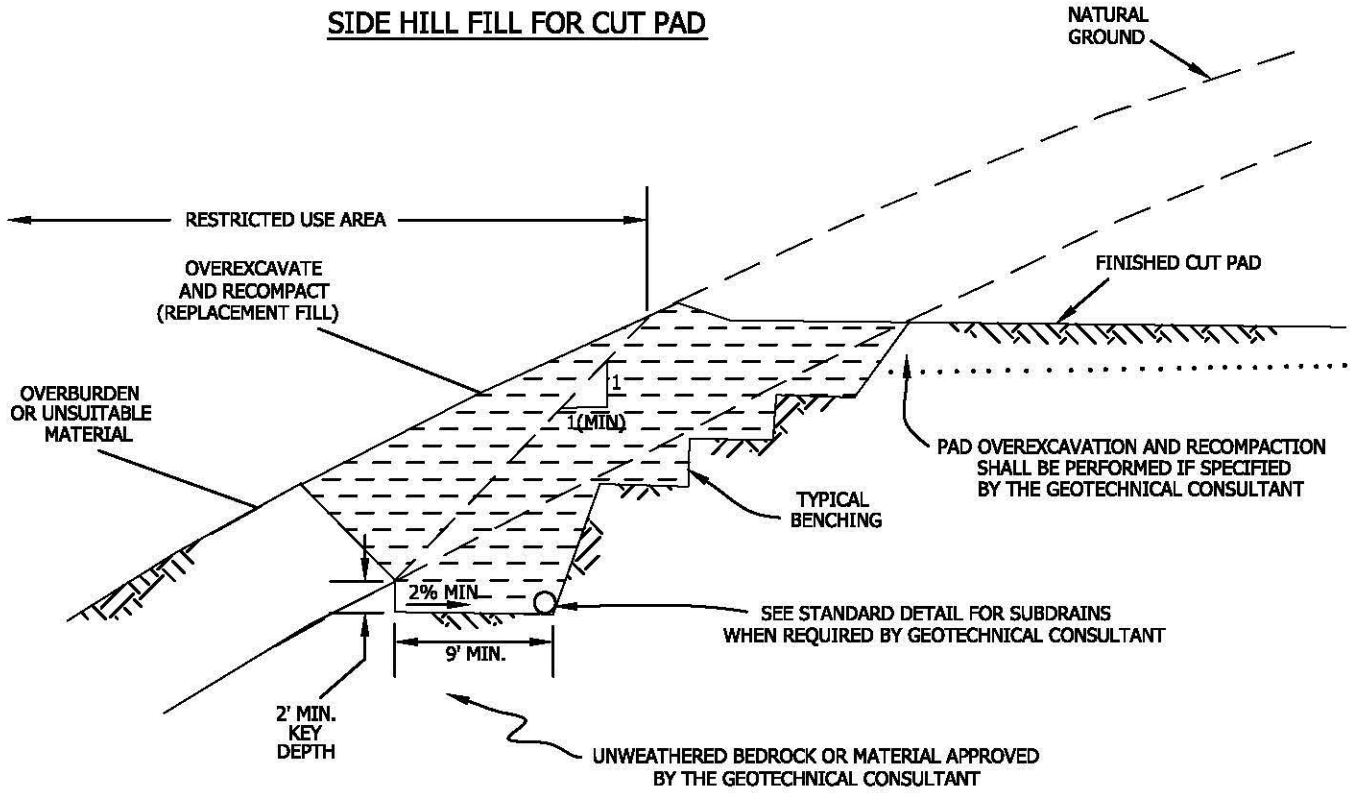

TRANSITION LOT FILLS AND SIDE HILL FILLS	GENERAL EARTHWORK AND GRADING SPECIFICATIONS STANDARD DETAILS E	Leighton

P:Drafting\templates\details\transition_fills.dwg (7/00)

SUBDRAIN OPTIONS AND BACKFILL WHEN NATIVE MATERIAL HAS EXPANSION INDEX OF ≤50

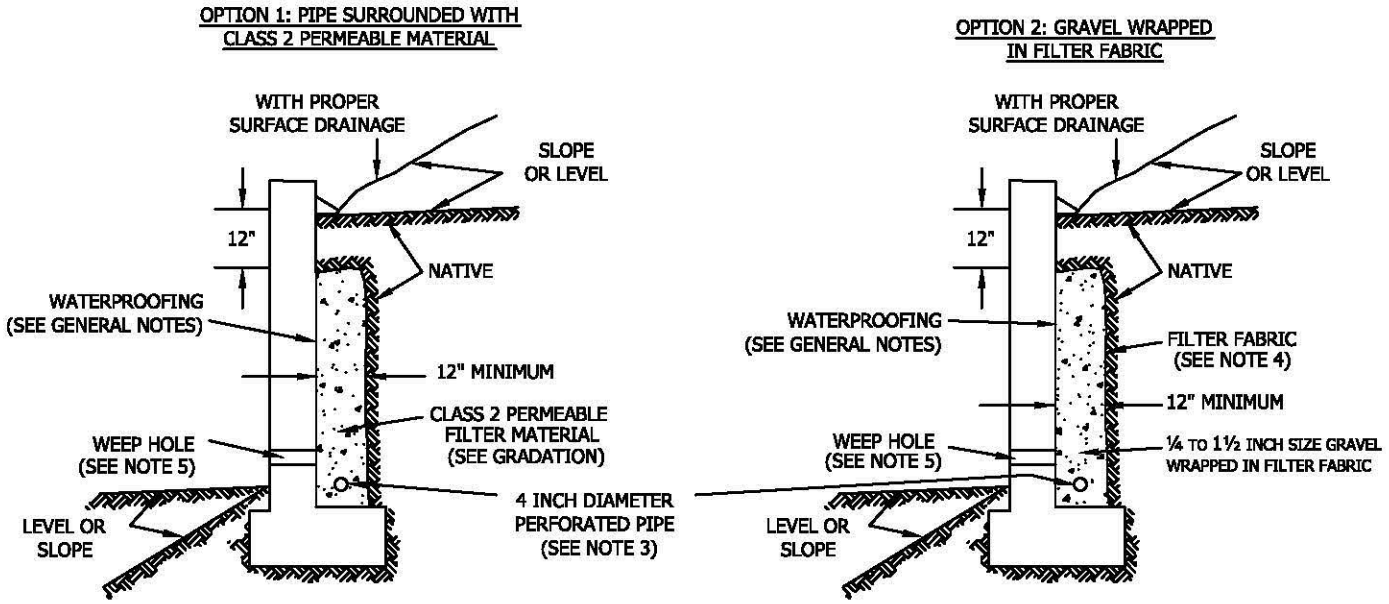

Class 2 Filter Permeable Material Gradation
Per Caltrans Specifications

Sieve Size	Percent Passing
1"	100
3/4"	90-100
3/8"	40-100
No. 4	25-40
No. 8	18-33
No. 30	5-15
No. 50	0-7
No. 200	0-3

GENERAL NOTES:

* Waterproofing should be provided where moisture nuisance problem through the wall is undesirable.
* Water proofing of the walls is not under purview of the geotechnical engineer
* All drains should have a gradient of 1 percent minimum
*Outlet portion of the subdrain should have a 4-inch diameter solid pipe discharged into a suitable disposal area designed by the project engineer. The subdrain pipe should be accessible for maintenance (rodding)
*Other subdrain backfill options are subject to the review by the geotechnical engineer and modification of design parameters.

Notes:
1) Sand should have a sand equivalent of 30 or greater and may be densified by water jetting.
2) 1 Cu. ft. per ft. of 1/4- to 1 1/2-inch size gravel wrapped in filter fabric
3) Pipe type should be ASTM D1527 Acrylonitrile Butadiene Styrene (ABS) SDR35 or ASTM D1785 Polyvinyl Chloride plastic (PVC), Schedule 40, Armco A2000 PVC, or approved equivalent. Pipe should be installed with perforations down. Perforations should be 3/8 inch in diameter placed at the ends of a 120-degree arc in two rows at 3-inch on center (staggered)
4) Filter fabric should be Mirafi 140NC or approved equivalent.
5) Weephole should be 3-inch minimum diameter and provided at 10-foot maximum intervals. If exposure is permitted, weepholes should be located 12 inches above finished grade. If exposure is not permitted such as for a wall adjacent to a sidewalk/curb, a pipe under the sidewalk to be discharged through the curb face or equivalent should be provided. For a basement-type wall, a proper subdrain outlet system should be provided.
6) Retaining wall plans should be reviewed and approved by the geotechnical engineer.
7) Walls over six feet in height are subject to a special review by the geotechnical engineer and modifications to the above requirements.

RETAINING WALL BACKFILL AND SUBDRAIN DETAIL FOR WALLS 6 FEET OR LESS IN HEIGHT

WHEN NATIVE MATERIAL HAS EXPANSION INDEX OF ≤50

Leighton

Figure

APPENDIX C

ASFE, Important Information Regarding Geotechnical Engineering Studies

Important Information About Your

Geotechnical Engineering Report

Subsurface problems are a principal cause of construction delays, cost overruns, claims, and disputes.

The following information is provided to help you manage your risks.

Geotechnical Services Are Performed for Specific Purposes, Persons, and Projects

Geotechnical engineers structure their services to meet the specific needs of their clients. A geotechnical engineering study conducted for a civil engineer may not fulfill the needs of a construction contractor or even another civil engineer. Because each geotechnical engineering study is unique, each geotechnical engineering report is unique, prepared *solely* for the client. No one except you should rely on your geotechnical engineering report without first conferring with the geotechnical engineer who prepared it. *And no one — not even you* — should apply the report for any purpose or project except the one originally contemplated.

Read the Full Report

Serious problems have occurred because those relying on a geotechnical engineering report did not read it all. Do not rely on an executive summary. Do not read selected elements only.

A Geotechnical Engineering Report Is Based on A Unique Set of Project-Specific Factors

Geotechnical engineers consider a number of unique, project-specific factors when establishing the scope of a study. Typical factors include: the client's goals, objectives, and risk management preferences; the general nature of the structure involved, its size, and configuration; the location of the structure on the site; and other planned or existing site improvements, such as access roads, parking lots, and underground utilities. Unless the geotechnical engineer who conducted the study specifically indicates otherwise, do not rely on a geotechnical engineering report that was:

- not prepared for you,
- not prepared for your project,
- not prepared for the specific site explored, or
- completed before important project changes were made.

Typical changes that can erode the reliability of an existing geotechnical engineering report include those that affect:

- the function of the proposed structure, as when it's changed from a parking garage to an office building, or from a light industrial plant to a refrigerated warehouse,
- elevation, configuration, location, orientation, or weight of the proposed structure,
- composition of the design team, or
- project ownership.

As a general rule, *always* inform your geotechnical engineer of project changes—even minor ones—and request an assessment of their impact. *Geotechnical engineers cannot accept responsibility or liability for problems that occur because their reports do not consider developments of which they were not informed.*

Subsurface Conditions Can Change

A geotechnical engineering report is based on conditions that existed at the time the study was performed. *Do not rely on a geotechnical engineering report* whose adequacy may have been affected by: the passage of time; by man-made events, such as construction on or adjacent to the site; or by natural events, such as floods, earthquakes, or groundwater fluctuations. *Always* contact the geotechnical engineer before applying the report to determine if it is still reliable. A minor amount of additional testing or analysis could prevent major problems.

Most Geotechnical Findings Are Professional Opinions

Site exploration identifies subsurface conditions only at those points where subsurface tests are conducted or samples are taken. Geotechnical engineers review field and laboratory data and then apply their professional judgment to render an opinion about subsurface conditions throughout the site. Actual subsurface conditions may differ—sometimes significantly—from those indicated in your report. Retaining the geotechnical engineer who developed your report to provide construction observation is the most effective method of managing the risks associated with unanticipated conditions.

A Report's Recommendations Are *Not* Final

Do not overrely on the construction recommendations included in your report. *Those recommendations are not final,* because geotechnical engineers develop them principally from judgment and opinion. Geotechnical engineers can finalize their recommendations only by observing actual

subsurface conditions revealed during construction. *The geotechnical engineer who developed your report cannot assume responsibility or liability for the report's recommendations if that engineer does not perform construction observation.*

A Geotechnical Engineering Report Is Subject to Misinterpretation

Other design team members' misinterpretation of geotechnical engineering reports has resulted in costly problems. Lower that risk by having your geotechnical engineer confer with appropriate members of the design team after submitting the report. Also retain your geotechnical engineer to review pertinent elements of the design team's plans and specifications. Contractors can also misinterpret a geotechnical engineering report. Reduce that risk by having your geotechnical engineer participate in prebid and preconstruction conferences, and by providing construction observation.

Do Not Redraw the Engineer's Logs

Geotechnical engineers prepare final boring and testing logs based upon their interpretation of field logs and laboratory data. To prevent errors or omissions, the logs included in a geotechnical engineering report should *never* be redrawn for inclusion in architectural or other design drawings. Only photographic or electronic reproduction is acceptable, *but recognize that separating logs from the report can elevate risk.*

Give Contractors a Complete Report and Guidance

Some owners and design professionals mistakenly believe they can make contractors liable for unanticipated subsurface conditions by limiting what they provide for bid preparation. To help prevent costly problems, give contractors the complete geotechnical engineering report, *but* preface it with a clearly written letter of transmittal. In that letter, advise contractors that the report was not prepared for purposes of bid development and that the report's accuracy is limited; encourage them to confer with the geotechnical engineer who prepared the report (a modest fee may be required) and/or to conduct additional study to obtain the specific types of information they need or prefer. A prebid conference can also be valuable. *Be sure contractors have sufficient time* to perform additional study. Only then might you be in a position to give contractors the best information available to you, while requiring them to at least share some of the financial responsibilities stemming from unanticipated conditions.

Read Responsibility Provisions Closely

Some clients, design professionals, and contractors do not recognize that geotechnical engineering is far less exact than other engineering disciplines. This lack of understanding has created unrealistic expectations that have led to disappointments, claims, and disputes. To help reduce the risk of such outcomes, geotechnical engineers commonly include a variety of explanatory provisions in their reports. Sometimes labeled "limitations" many of these provisions indicate where geotechnical engineers' responsibilities begin and end, to help others recognize their own responsibilities and risks. *Read these provisions closely.* Ask questions. Your geotechnical engineer should respond fully and frankly.

Geoenvironmental Concerns Are Not Covered

The equipment, techniques, and personnel used to perform a *geoenvironmental* study differ significantly from those used to perform a *geotechnical* study. For that reason, a geotechnical engineering report does not usually relate any geoenvironmental findings, conclusions, or recommendations; e.g., about the likelihood of encountering underground storage tanks or regulated contaminants. *Unanticipated environmental problems have led to numerous project failures.* If you have not yet obtained your own geoenvironmental information, ask your geotechnical consultant for risk management guidance. *Do not rely on an environmental report prepared for someone else.*

Obtain Professional Assistance To Deal with Mold

Diverse strategies can be applied during building design, construction, operation, and maintenance to prevent significant amounts of mold from growing on indoor surfaces. To be effective, all such strategies should be devised for the *express purpose* of mold prevention, integrated into a comprehensive plan, and executed with diligent oversight by a professional mold prevention consultant. Because just a small amount of water or moisture can lead to the development of severe mold infestations, a number of mold prevention strategies focus on keeping building surfaces dry. While groundwater, water infiltration, and similar issues may have been addressed as part of the geotechnical engineering study whose findings are conveyed in this report, the geotechnical engineer in charge of this project is not a mold prevention consultant; ***none of the services performed in connection with the geotechnical engineer's study were designed or conducted for the purpose of mold prevention. Proper implementation of the recommendations conveyed in this report will not of itself be sufficient to prevent mold from growing in or on the structure involved.***

Rely, on Your ASFE-Member Geotechncial Engineer for Additional Assistance

Membership in ASFE/The Best People on Earth exposes geotechnical engineers to a wide array of risk management techniques that can be of genuine benefit for everyone involved with a construction project. Confer with you ASFE-member geotechnical engineer for more information.

ASFE
The Best People on Earth

8811 Colesville Road/Suite G106, Silver Spring, MD 20910
Telephone: 301/565-2733 Facsimile: 301/589-2017
e-mail: info@asfe.org www.asfe.org

Copyright 2004 by ASFE, Inc. Duplication, reproduction, or copying of this document, in whole or in part, by any means whatsoever, is strictly prohibited, except with ASFE's specific written permission. Excerpting, quoting, or otherwise extracting wording from this document is permitted only with the express written permission of ASFE, and only for purposes of scholarly research or book review. Only members of ASFE may use this document as a complement to or as an element of a geotechnical engineering report. Any other firm, individual, or other entity that so uses this document without being an ASFE member could be committing negligent or intentional (fraudulent) misrepresentation.

IIGER08041.0MRP

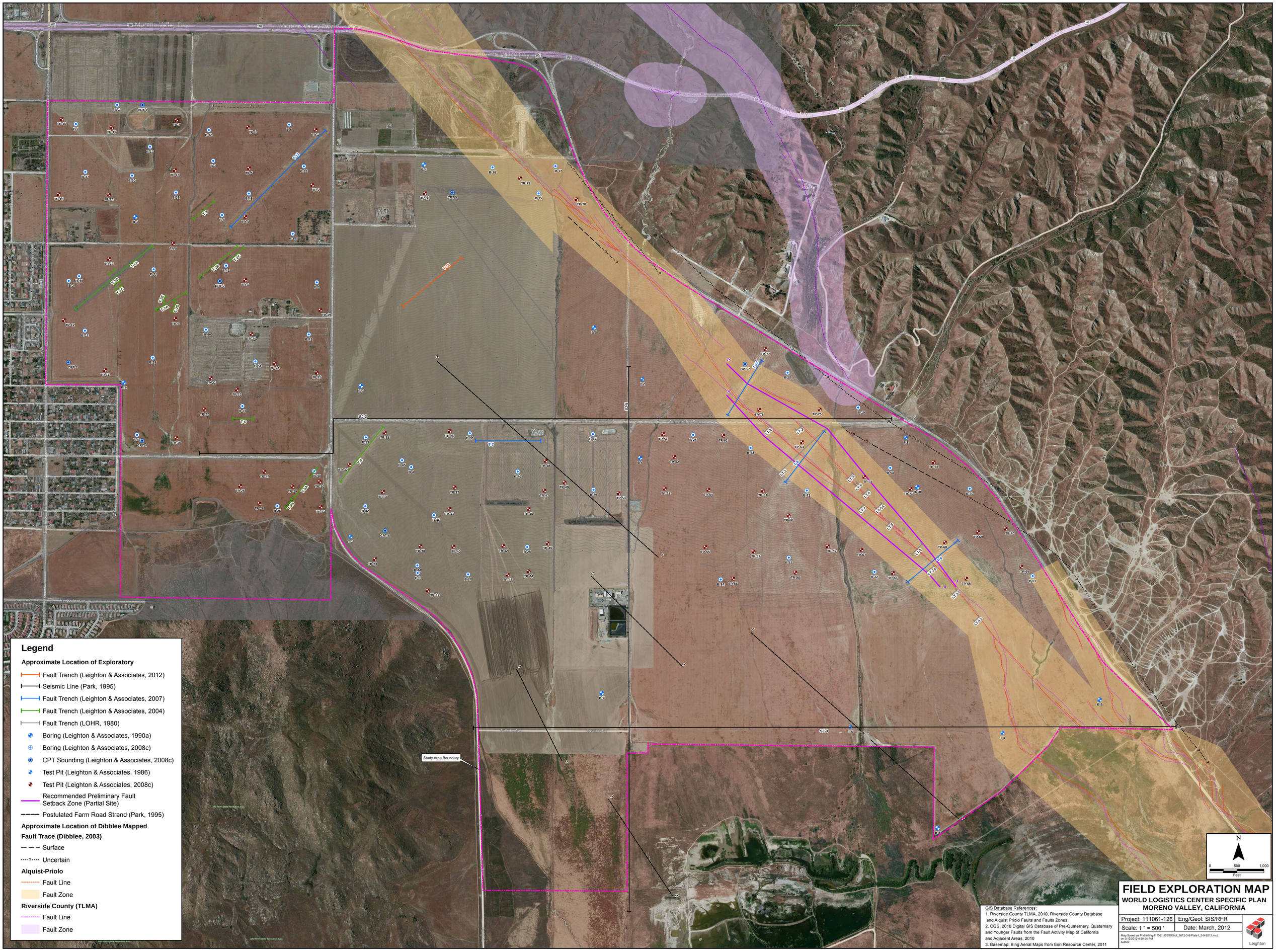
Legend
Approximate Location of Exploratory
Fault Trench (Leighton & Associates, 2012)
Seismic Line (Park, 1995)
Fault Trench (Leighton & Associates, 2007)
Fault Trench (Leighton & Associates, 2004)
Fault Trench (LOHR, 1980)
Boring (Leighton & Associates, 1990a)
Boring (Leighton & Associates, 2008c)
CPT Sounding (Leighton & Associates, 2008c)
Test Pit (Leighton & Associates, 1986)
Test Pit (Leighton & Associates, 2008c)
Recommended Preliminary Fault Setback Zone (Partial Site)
Postulated Farm Road Strand (Park, 1995)
Approximate Location of Dibblee Mapped Fault Trace (Dibblee, 2003)
Surface
Uncertain
Alquist-Priolo
Fault Line
Fault Zone
Riverside County (TLMA)
Fault Line
Fault Zone
Study Area Boundary
N
0
500
1,000
Feet
GIS Database References:
1. Riverside County TLMA, 2010, Riverside County Database and Alquist Priolo Faults and Faults Zones.
2. CGS, 2010 Digital GIS Database of Pre-Quaternary, Quaternary and Younger Faults from the Fault Activity Map of California and Adjacent Areas, 2010
3. Basemap: Bing Aerial Maps from Esri Resource Center, 2011
FIELD EXPLORATION MAP
WORLD LOGISTICS CENTER SPECIFIC PLAN
MORENO VALLEY, CALIFORNIA
Project: 111061-126
Eng/Geol: SIS/RFR
Scale: 1 " = 500 '
Date: March, 2012
Map Saved as P:\drafting\111061\126\GIS\of_2012-3-9\Plate1_3-9-2012.mxd
on 3/12/2012 4:30:54 PM
Author:
Leighton

May 17, 2012

Project No. 111061-126

Highland Fairview
14225 corporate Way
Moreno Valley, California 92553

Attention: Mr. Brian Hixson

Subject: Response to Review Comments to "Notice of Preparation (NOP) of a Draft Environmental Impact Report (DEIR)", World Logistics Center (WLC) Specific Plan, Moreno Valley, California

In accordance with your request, Leighton and Associates, Inc. (Leighton) has prepared in response to the comments prepared by Mr. Gerald Budlong dated March 22, 2012 and Mr. Michael McKibben, Ph.D. dated March 25, 2012.

Response to Mr. Budlong (Item No. 2, Geology and Soils)

An onsite geologic, geotechnical and earthquake hazard analysis was performed on the subject property with the results and mitigation recommendations presented in the Preliminary Geotechnical Evaluation report by Leighton dated March 23, 2012. Recommendations therein include the avoidance and/or setback requirements from all onsite active faults. As presented in the said report, there is a Riverside County and California State Alquist Priolo Earthquake Fault Hazard Zone (also referred to as Seismic Hazard Zones) located within the subject property. Therefore, we concur that site planning must include setbacks from all active faults as determined by site specific fault investigations performed in accordance with City and State requirements and approved geotechnical/geologic report for this site.

Response to Mr. McKibben, Ph.D.:

Leighton concurs with Mr. McKibben that the project EIR should not rely on outdated and inaccurate hazard maps and all relevant published information as well as independent evaluations must be performed. Mr. McKibben requested the following geologic hazards to be evaluated and mitigated:

- **Hazard 1** - Seismic shaking and liquefaction/collapse potential in relation to uniform building codes.

Response: *Leighton has performed geotechnical/geologic analyses and evaluations for the WLC property and the findings and mitigation recommendations for these phenomena are presented in the March 23, 2012 report. Leighton's seismic design parameters are in accordance with the current 2010 California Building Code (CBC) and should be followed by the project design team.*

- **Hazard 2** - Seismic slumping and ground rupture potential caused by the proximity to the active San Andreas, Casa Loma, San Jacinto and Farm faults.

  Response: *Leighton has performed detailed subsurface evaluations and analyses on the potential for ground rupture and seismic slumping (landsliding) from the above mentioned faults. Mitigation recommendations for structural setbacks and active fault avoidance have been presented in the March 23, 2012 report. While some areas along the active San Jacinto fault zone have not been fully investigated, future studies are recommended in this area prior to completion of concept development plans in order to provide appropriate fault setback zones.*

- **Hazard 3** - Landslides and slow-motion creep related to active faulting along the project's boundary.

  Response: *Leighton's detailed fault investigations, aerial photo reviews and boring explorations within and along the project's boundary have not encountered any evidence of ground creep or landslides related to active faulting. Leighton recommends additional slope stability analysis once concept grading plans are developed for slopes that could be subject to seismic shaking or slow –motion creep.*

- **Hazard 4** - Rupture-induced explosions and fire potential for two major regional natural gas pipelines that cross active faults within or adjacent to the project etc.

  Response: *Leighton agrees with this assessment and the project design team should consider appropriate measures to limit potential damages caused by active fault movement to these gas transmission mains.*

- **Hazard 4** - Any hazards identified by the State's existing emergency response plan for a major earthquake on the San Jacinto fault in the inland empire.

  Response: *Leighton agrees that the design team should consider the State's emergency response plan for major earthquakes in the area.*

- **Hazard 4** - Flooding, inundation, and hydrocompaction resulting from the

increase in the area of Mystic Lake since 1938 and the projection of its areal extent to 2023 (Morton et al., 2006).

Response: *Leighton's review of the projected extent of Mystic Lake was considered in our 2012 Geotechnical evaluation. Based on the study by Morton, the predicted high water elevation will remain approximately 70 feet below the southern low edge of the WLC planned development. The affects due to hydrocompaction are also considered in our report and appropriate remedial earthwork recommendations are presented.*

Leighton recommends that the project EIR should be updated to include the discussion points included herein or as deemed appropriate.

If you have any questions regarding this letter, please contact this office. We appreciate this opportunity to be of service.

Respectfully submitted,

LEIGHTON AND ASSOCIATES, INC.

Robert F. Riha
CEG 1921 (Exp. 2/28/14)
Senior Principal Geologist

Distribution: (1) Addressee (1 via email)
(1) LSA Associates, Attn: Mr. Kent Norton

References

Budlong, Gerald M., 2012, letter Regarding Notice of Preparation for the Draft Environmental Impact Report for the World Logistics Center Specific Plan, dated March 22, 2012.

Leighton and Associates, Inc., 2004, Preliminary Fault Investigation, Tentative Tract Map No. 32501, Moreno Highlands, City of Moreno Valley, California, Project No. 111061-103, dated December 3, 2004.

Leighton and Associates, Inc., 2006, Preliminary Geotechnical Investigation, Moreno Highlands Specific Plan Area, Southeast Corner of Highway 60 and Redlands Boulevard, City of Moreno Valley, Riverside County, California, Project No. 111061-104, dated March 8, 2006.

Leighton and Associates, Inc., 2007a, Supplemental Fault Investigation, Moreno Highlands Development, City of Moreno Valley, California, Project No. 111061-107, dated February 15, 2007.

Leighton and Associates, Inc., 2012, Preliminary Geotechnical Evaluation for Environmental Impact Report, "World Logistics Center Specific Plan", South of SR 60 between Redlands Boulevard and Gilman Springs Road, City of Moreno Valley, California, Project No 111061-126 Dated March 23, 2012.

Leighton and Associates Inc., 2012, Supplemental Fault Investigation, Lee Property, Portion of World Logistics Center Specific Plan Area, City of Moreno Valley, California, Project No. 111061-127, dated March 20, 2012.

McKibben, Michael A., 2012, letter Regarding notice of Preparation of a Draft Environmental Impact Report – World Logistics Center Specific Plan, dated March 25, 2012

Morton, D.M., 2006, Historic Lake Levels of Mystic Lake and a projection of where the lake level (closed depression) is predicted to be in 2023, http://pubs.usgs.gov/of/2006/1217/of23006-1217 map/of2006-1217, Fig 5.pdf.

GEOTECHNICAL REVIEW OF OFFSITE IMPROVEMENT AREAS, AMENDMENT TO PRELIMINARY GEOTECHNICAL EVALUATION, WORLD LOGISTICS CENTER, CITY OF MORENO VALLEY, CALIFORNIA

Prepared for:

Highland Fairview Properties

3070 Bristol Street, Suite 320
Costa Mesa, California 92626

Project No. 1111061-126

May 18, 2012

DRAFT DOCUMENT

Leighton and Associates, Inc.
A LEIGHTON GROUP COMPANY

Leighton and Associates, Inc.
A LEIGHTON GROUP COMPANY

May 18, 2012

Project No. 111061-126

To: Highland Fairview Properties, LLC
14225 Corporate Way
Moreno Valley, California 92553

Attention: Mr. Brian Hixson

Subject: Geotechnical Review of Offsite Improvement Areas, Amendment to Preliminary Geotechnical Evaluation, World Logistics Center, City of Moreno Valley, California

In accordance with your request and authorization, we have performed a geotechnical review of three potential off-site water reservoir sites, four potential debris basins, and various sewer/water/roadway improvements for the World Logistics Center in the city of Moreno Valley, California. For the purposes of this report, we performed a site reconnaissance and reviewed available literature and aerial photographs pertinent to these sites. This report summarizes our findings and provides a geotechnical review describing the known and anticipated geotechnical conditions for each of the sites. Additional geotechnical studies are recommended as the design plans develop, i.e. water reservoir sites and access routes are selected, the basin sizes and designs are prepared, and the sewer/water/roadway improvements are developed.

Respectfully submitted,

LEIGHTON CONSULTING, INC.

Robert F. Riha
CEG 1921 (Exp. 02/2//14)
Vice President/Senior Principal Geologist

Simon I. Saiid
GE 2641 (Exp. 09/30/13)
Principal Engineer

SIS/RFR/AWS/lr

Distribution: (2) Address, (1) PDF on CD

DRAFT DOCUMENT

Table of Contents

1.0 INTRODUCTION 1

1.1 Purpose and Scope 1
1.2 Previous Studies 1
1.3 Site Description and Proposed Development 2

2.0 REGIONAL GEOLOGY 3

2.1 Geologic Settings 3
2.2 Regional Faulting and Fault Activity 3

3.0 SITE SPECIFIC GEOLOGIC/GEOTECHNICAL CONDITIONS 5

3.1 General 5
3.2 Potential Water Reservoir & Access Area “A” 6
3.3 Potential Water Reservoir & Access Area “B” 8
3.4 Gilman Springs Road Debris Basins 9
3.5 Gilman Springs Roadway and Utility Improvements 11
3.6 Cactus Avenue Roadway Improvements 13
3.7 Brodiaea Avenue to Cactus Avenue Drainage Improvements 14
3.8 Brodiaea Avenue and Wilmot Street Sewer Improvements 16
3.9 Cottonwood Avenue Water and Utility Improvements 17
3.10 Redlands Boulevard Water and Utility improvements 18
3.11 Eucalyptus Avenue to Fir Avenue Water Improvements 20
3.12 Potential Water Reservoir & Access Area “C” 21
3.13 Redlands Boulevard Ramp Improvements 22
3.14 Theodore Street Interchange Improvements 24

4.0 SUMMARY OF FINDINGS AND CONCLUSIONS 26

5.0 PRELIMINARY DESIGN CONSIDERATIONS 28

5.1 Additional Geotechnical Studies 28
5.2 Structural Fills 28
5.3 Import Soils 28
5.4 Trench Excavation and Backfill 28

6.0 LIMITATIONS 30

DRAFT DOCUMENT

Accompanying Tables, Figures and Appendices

Tables

Table 1 – Summary of Preliminary Geotechnical Findings End of Text

Figures

Figure 1 – Site Location Map End of Text
Figure 2 – Regional Geologic Map End of Text
Figure 3 – Earthquake Fault Hazard Zone Map End of Text

Appendices

Appendix A – References
Appendix B – General Earthwork and Grading Recommendations
Appendix C – ASFE, Information Regarding Geotechnical Engineering Studies

DRAFT DOCUMENT

1.0 INTRODUCTION

1.1 Purpose and Scope

This report presents the results of our geotechnical review of off-site improvement areas at the World Logistics Center, City of Moreno Valley, California (see Figure 1). The purpose of our review was to provide a preliminary geotechnical evaluation of the off-site improvement areas in support of the project EIR documents.

It is our understanding based on information provided by your office, the proposed development will include above ground water reservoir tanks at three potential locations, four debris basins located northeast of Gilman Springs Road, and various sewer, water and roadway improvements along Cactus Avenue, Redlands Boulevard, Fir Avenue, Cottonwood Avenue, and Gilman Springs Road. This report is a preliminary geotechnical review based on existing reports, maps and other pertinent documents as well as our field observations. No subsurface work was performed during this study. More specifically, our scope of services included the following:

- Review of provided Limits of Environmental Analysis plan (Highland Fairview, 2012), other relevant published documents, reports, and maps regarding geotechnical conditions at the subject sites,
- Geologic site reconnaissance,
- Review of sequential pairs of aerial photographs as well as other Web based resources, and
- Preparation of this amendment to the Preliminary Geotechnical Investigation Report describing the known and anticipated geotechnical conditions for the subject off-site improvement areas.

1.2 Previous Studies

Leighton previously conducted several geologic/geotechnical studies for the overall World Logistics Center and adjacent sites. The most recent study is the Preliminary Geotechnical Evaluation (Leighton, 2012). Information and findings provided in this and other referenced studies are referred to as necessary or included herein for ease of reference.

DRAFT DOCUMENT

1.3 Site Description and Proposed Development

The potential water reservoir sites, debris basins, and various sewer, water and roadway improvements are generally located in the eastern portion of the City of Moreno Valley. Each site is presented on the Site Location Map (Figure 1). For the purposes of this report we have grouped the debris basins into one study area.

DRAFT DOCUMENT

2.0 REGIONAL GEOLOGY

2.1 Geologic Settings

The project sites are located within the Peninsular Ranges Province, which is characterized by northwest trending elongated mountain ranges and valleys. The Peninsular Ranges Province is divided into three major fault bounded tectonic blocks within the San Andreas Fault System, which consist of (from west to east): Santa Ana, Perris, and San Jacinto Blocks. The sites are located near the northeastern boundary of the relatively stable Perris Block and the tectonically adjusting San Jacinto Block.

The study areas are generally located within the northern portion of the San Jacinto Valley, a fault-bounded tectonic basin that has evolved from movement along the San Jacinto fault system resulting in a down-dropped northwest-trending trough. The elongate transverse basin is believed to have formed as a result of a right step of the fault zone between the Casa Loma and Claremont strands of the fault zone (Morton and Matti, 1993)

As mapped by the USGS (2006), our investigation in this area and our observations, the natural geologic units underlying the subject properties vary from granitic bedrock to sedimentary (San Timoteo) formation to alluvial fan deposits, and localized landslide deposits. The generalized geologic units are presented on the Regional Geologic Map, (Figure 2). Site specific geologic conditions are further discussed in subsequent sections of this report.

2.2 Regional Faulting and Fault Activity

The subject sites, like the rest of Southern California, are located within a seismically active region as a result of being located near the active margin between the North American and Pacific tectonic plates. The principal source of seismic activity is movement along the northwest-trending regional fault systems such as the San Andreas, San Jacinto and Elsinore Fault Zones. Currently, these fault systems accommodate up to approximately 55 millimeters per year (mm/yr) of slip between the plates. The nearby San Jacinto Fault Zone is estimated to accommodate slip of approximately 12 mm/yr (WGCEP, 1995). However, geodetic measurements between 1973 and 1981 show that the San Jacinto and San Andreas Faults currently have comparable strain rates. King (1983) and Morton (1993) has estimated an average slip rate of as much as 20 mm/yr for the San Jacinto Fault. An increased strain rate, in theory, could contribute to an overall higher magnitude moment than what has been previously considered for the San Jacinto Valley by local governmental agencies and the 2010 California Building Code. The nearest Alquist-Priolo zoned “active fault”, is

DRAFT DOCUMENT

the San Jacinto Valley Segment of the San Jacinto Fault which is depicted on the accompanying Earthquake Fault Zone Map, Figure 3.

DRAFT DOCUMENT

3.0 SITE SPECIFIC GEOLOGIC/GEOTECHNICAL CONDITIONS

3.1 General

A brief site reconnaissance was conducted to each location on May 14, 2012 in which the property supporting the potential tank sites, debris basins and various roadway and utility improvements were observed. The general geologic conditions were reviewed and compared with existing published geologic mapping at each of the proposed improvement sites. Prior to the site review, sequential pairs of historic aerial photographs were independently reviewed to observe if geomorphic features indicative of faulting or landsliding was apparent within each study area. The aerial photographs reviewed are summarized in Appendix A. Our observations for each site are summarized in the following subsections and presented in Table 1 attached. The specific geologic/geotechnical conditions evaluated based on our site reconnaissance and desktop reviews are as follows:

- **Site Specific Geology**: Site specific geology is generally described based on our field observations during the site reconnaissance and review of previous geotechnical reports, and published geologic maps.

- **Surface Water and Groundwater**: Surface and groundwater conditions are described based on our field observations during the site reconnaissance and review of previous geotechnical reports, and available local and State groundwater data.

- **Site Specific Faulting**: Site faulting is evaluated based on our review of the regional fault map showing the proximity of the site to major faults identified by the California Division of Mines and Geology (CDMG, renamed California Geological Survey) and our site specific fault investigations (see Appendix A). Additionally, sequential pairs of historic aerial photographs were independently reviewed to observe if geomorphic features indicative of any faulting exist on each site.

- **Secondary Seismic Hazards**: Secondary hazards that are generally associated with severe ground shaking during an earthquake are as follows:

  - Ground rupture generally occurs along existing active faults.

  - Seiches and Tsunamis, is normally caused by large bodies of water (inland seas, large rivers, and oceans).

DRAFT DOCUMENT

- Landsliding occurs when masses of rock, earth, or debris that moves down a slope due to disturbance caused by rainfall, seismic events, and applied additional loads.

- Rock falls generally occur when boulders and/or elevated rock out-cropping fall due to disturbance from rainfall or seismic events.

- Ground Fissuring and Subsidence generally occurs due to ground water withdrawal or groundshaking.

- Liquefaction is the loss of soil strength or stiffness due to a buildup of pore-water pressure during severe ground shaking. Liquefaction is associated primarily with loose (low density), saturated, fine- to medium-grained cohesionless soil.

- Seismic densification is seismically induced settlement that can occur during a strong seismic event within loose to moderately dense, dry to moist granular soils.

- **Grading Considerations**: Pertinent grading considerations are provided for each site based on our knowledge of the local geology and past experience on this site.

3.2 Potential Water Reservoir & Access Area "A"

Reservoir Area "A" consists of a potential tank pad that is located southeast of the intersection of Theodore Street and Ironwood Avenue, north of the World Logistics Center.

Site Specific Geology: The potential reservoir is located on a prominent ridgeline underlain by the San Timoteo formation bedrock (see, Figure 2). A bedrock landslide feature generated in the San Timoteo formation bedrock was observed along the toe of the naturally descending slopes to the west, below the potential reservoir pad area. The reservoir pad is located within the State of California Earthquake fault zone (see, Figure 3). The bedrock material in this vicinity generally consists of locally loose to medium dense, locally friable sandstone containing varying amounts of gravel and silt. An access road is planned to reach the site via Ironwood Avenue and will traverse alluvium filled valleys and cut through a mapped landslide as well as potentially unstable San Timoteo formation bedrock.

- **Surface Water and Groundwater**: No surface water was observed during the site visit. During periods of heavy rain, drainage patterns will be created

DRAFT DOCUMENT

due to the steep topography and should be included into design of any cut or fill slopes.

- **Site Specific Faulting**: No faulting was observed, known to exist onsite, or projected into this reservoir location. However, the site is within the State of California Earthquake Fault Zone.

- **Secondary Seismic Hazards**: Secondary hazards that might be associated with severe ground shaking during an earthquake are as follows:

  - Ground rupture: Our review of previous investigations and current observations of site conditions indicate that there is a possible fault within the pad area. The potential for ground fissuring/rupture should be considered for this site.

  - Seiches and Tsunamis: Due to site elevation and great distance from large bodies of water, the possibility of seiches, tsunamis and inundation on this site is considered very low to nil.

  - Landsliding: Several landslides have been previously mapped by others and observed during our field review of the site. Due to the existing nearby landslides, the gross stability of the area must be determined during future studies.

  - Rock falls: Due to the elevated location and lack of hard rock boulders in this area, the potential for rock fall due to either erosion or seismic ground shaking is insignificant in this area.

  - Ground Fissuring and Subsidence: No evidence of ground fissuring was observed or been reported within the project boundary, or projecting into the property from immediately adjacent or nearby properties.

  - Liquefaction: The subject site is not within a liquefaction hazard zone (Riverside County, 2003). Due to relatively dense bedrock and older alluvial soils the potential for liquefaction at the subject site is considered very low to nil.

  - Seismic densification: We anticipate that the near-surface loose soil deposits susceptible to such seismically induced settlement will be removed and compacted during grading.

- **Grading Considerations**: Grading on this site and access roads will likely encounter medium dense to dense, friable sandstone to siltstone. The landslide complexes will likely create gross stability issues that may require

DRAFT DOCUMENT

deep remedial grading stabilization measures. Slopes exposing unfavorable out of slope bedding structure may require removal and recompaction to create a stable slope configurations. Due to the existing landslides, the gross stability of the area must be determined during future studies. The absence of faulting should be determined prior to further design.

3.3 Potential Water Reservoir & Access Area "B"

Reservoir Area "B" consists of 1 potential tank pad located east of the intersection of Gilman Springs Road and south of SR-60 along the western margin of the "Badlands" area (See Figure 1).

- **Site Specific Geology**: The potential reservoir is located on a prominent ridgeline or highpoint immediately south of the SR-60 right of way. Several relatively shallow landslide slump features generated in the San Timoteo formation bedrock were observed. This bedrock material generally consists of locally loose to medium dense, locally friable sandstone containing varying amounts of gravel and silt. An access road is planned to reach the site via Gilman Springs Road and will traverse alluvium filled valleys and cut through potentially unstable San Timoteo formation bedrock.

- **Surface Water and Groundwater**: No surface water was observed during the site visit. During periods of heavy rain, drainage patterns will be created due to the steep topography and should be included into design of any cut or fill slopes.

- **Site Specific Faulting**: Although no faulting was observed during our review, mass wasting and weathering of the formational materials may be masking any onsite features indicative of active faulting.

- **Secondary Seismic Hazards**: Secondary hazards that might be associated with severe ground shaking during an earthquake are as follows:

  - Ground rupture: Our review of previous investigations and current observations of site conditions indicate no active or potentially active faulting on known for this site. However, mass wasting and weathering of the formational materials may be masking any onsite features indicative of active faulting

  - Seiches and Tsunamis: Due to site elevation and great distance from large bodies of water, the possibility of seiches, tsunamis and inundation on this site is considered very low to nil.

DRAFT DOCUMENT

- Landsliding: Several landslides has been previously mapped by others nearby and also observed during our field review of the site. Landsliding due to seismic activity is possible at this site.

- Rock falls: Due to the elevated location and lack of hard rock boulders in this area, the potential for rock fall due to either erosion or seismic ground shaking is insignificant in this area.

- Ground Fissuring and Subsidence: No evidence of ground fissuring was observed or been reported within the project boundary, or projecting into the property from immediately adjacent or nearby properties.

- Liquefaction: The subject site is not within a liquefaction hazard zone (Riverside County, 2003). Due to relatively dense bedrock and older alluvial soils the potential for liquefaction at the subject site is considered very low to nil.

- Seismic densification: We anticipate that the near-surface loose soil deposits susceptible to such seismically induced settlement will be removed and compacted during grading.

- **Grading Considerations**: Grading on this site and access road areas will likely encounter loose to dense, friable sandstone to siltstone. The surficial landslides in the surrounding area may be indicative of larger landslides which will likely create gross stability issues that may require deep remedial grading stabilization measures. Slopes exposing unfavorable out of slope bedding structure may require removal and recompaction to create a stable slope configurations. Due to the existing landslides, the gross stability of the area must be determined during future studies. Potential faulting within the pad area should be evaluated prior to further design efforts.

3.4 Gilman Springs Road Debris Basins

The proposed debris basins located along the east side of Gilman Springs Road and east of the Worldwide Logistics Center (see Figure 1).

- **Site Specific Geology**: These sites are underlain by younger and older alluvial material that appears to have been generated from the surrounding hills (see Figure 2). Based on our subsurface investigation of the property immediately west of Gilman Springs Road (Leighton, 2012), the alluvial soils are a minimum of 50 feet in thickness.

- **Surface Water and Groundwater**: No surface water was observed at the debris basin sites during our site reconnaissance. The potential for surface

DRAFT DOCUMENT

runoff in the area should be anticipated due to the existence of drainage channels located upstream from the locations of the debris basins. Large trees and grasses were observed in the drainage channels. Based on our subsurface investigation on the property immediately to the west of Gilman Springs Road (Leighton, 2012), ground water is expected to be greater than 50 feet deep and should not be a constraint to construction of the basins.

- **Site Specific Faulting**: An Earthquake Fault Zone as created by the Alquist-Priolo Earthquake Fault Zoning Act (Bryant, 2007), parallels Gilman Springs Road, (see Figure 3). The northern most debris basin is included within the State of California Earthquake Fault Zone. A Riverside County Fault Zone projects thru the debris basin that is near the intersection of Gilman Springs Road and Alessandro Boulevard, (see Figure 3). Surface expression of this fault splay, such as scarps, offset drainages or other lineaments were not observed during this or previous studies. No subsurface investigation has been performed to confirm the existence of this fault splay. However, this fault is considered active based on the County geologic hazard maps.

- **Secondary Seismic Hazards**: Secondary hazards that might be associated with severe ground shaking during an earthquake are as follows:

  - Ground rupture: Our review of previous investigations and current observations of the subject debris basins and adjacent areas is that there are no active faulting on site. However, due to the existence of active faulting within the State of California Earthquake Fault Zone as well as the Riverside County Fault Zone as depicted on Figure 3, the potential for ground subsidence/fissuring should be considered low to moderate for this site. Therefore ground rupture should be considered during the design of the planned basins.

  - Seiches and Tsunamis: Due to site elevation and great distance from large bodies of water, the possibility of seiches, tsunamis and inundation on this site is considered very low to nil.

  - Landsliding: No landslides have been previously mapped by others or identified by us during our review of this property. Landsliding due to seismic activity is not anticipated at the site due to relatively flat lying terrain. A stability analysis of the basin slopes should be performed when the design configuration is known.

  - Rock falls: Due to the lack of boulders and/or elevated rock out-cropping on or immediately adjacent to this site, the possibility of rock fall to impact the proposed basins is considered low.

DRAFT DOCUMENT

- Ground Fissuring and Subsidence: No evidence of ground fissuring was observed or been reported within the project boundary, or projecting into the property from immediately adjacent or nearby properties.

- Liquefaction: The subject site is not within a liquefaction hazard zone (Riverside County, 2003). Groundwater within the subject site is reported to be in excess of 50 feet below existing ground surface. Due to deep groundwater and relatively dense alluvial soils underlying the site, it is our opinion that potential for liquefaction at the site is low.

- Seismic densification: Seismically-induced dry settlement is expected to be minimal to moderate at these basin locations. We anticipate that the near-surface loose soil deposits susceptible to such seismically induced settlement will be removed and compacted during grading.

- **Grading Considerations**: Grading of the basins will be readily accomplished with conventional heavy duty earth moving equipment. Slopes exposing loose or friable non-cohesive granular soils may require removal and recompaction. Site soils should be considered highly erosive and protective measures should be considered in the design.

3.5 Gilman Springs Roadway and Utility Improvements

The proposed roadway and utility improvements are for Gilman Springs Road and are bounded on the north by Highway 60 and on the south by Cactus Avenue (if extended eastward) see, Figure 1.

- **Site Specific Geology**: Gilman Springs Road is underlain by San Timoteo formation bedrock near Eucalyptus Avenue and by younger and older alluvial material for the remainder of the evaluated section. The alluvial soils appear to have been generated from the surrounding hills, (see Figure 2). Based on our subsurface investigation of the property immediately west of Gilman Springs Road (Leighton, 2012), the alluvial soils are a minimum of 50 feet in thickness.

- **Surface Water and Groundwater**: No surface water was observed along Gilman Springs Road. The potential for surface runoff in the area should be anticipated due to the existence of drainage channels located to the east of the roadway. Based on our subsurface investigation on the property immediately to the south of Gilman Springs Road (Leighton, 2012), ground water is expected to be greater than 50 feet deep and should not be a constraint to construction of the basins.

DRAFT DOCUMENT

- **Site Specific Faulting**: An Earthquake Fault Zone as created by the Alquist-Priolo Earthquake Fault Zoning Act (Bryant, 2007), parallels Gilman Springs Road and transects a portion of the road in the north as well as projects thru Gilman Springs Road in the south, (see Figure 3). A Riverside County Fault Zone projects thru Gilman Springs Road near the intersection of Alessandro Boulevard, (see Figure 3). Surface expression of this fault splay, such as scarps, offset drainages or other lineaments were not observed during this or previous studies. No subsurface investigation has been performed to confirm the existence of this fault splay. However, this fault is considered active based on the County geologic hazard maps

- **Secondary Seismic Hazards**: Secondary hazards that might be associated with severe ground shaking during an earthquake are as follows:

  - Ground rupture: Our review of previous investigations and current observations of site conditions indicate that there are possible faults that transects the subject roadway. The potential for ground fissuring/rupture should be considered for this roadway.

  - Seiches and Tsunamis: Due to site elevation and great distance from large bodies of water, the possibility of seiches, tsunamis and inundation on this site is considered very low to nil.

  - Landsliding: No landslides have been previously mapped by others or identified by us during our review of this property. Landsliding due to seismic activity is not anticipated at the site due to relatively flat lying terrain. A stability analysis of cut slopes should be performed when the design configuration is known.

  - Rock falls: Due to the lack of boulders and/or elevated rock out-cropping on or immediately adjacent to this site, the possibility of rock fall to impact the proposed improvements is considered low.

  - Ground Fissuring and Subsidence: No evidence of ground fissuring was observed or been reported within the project boundary, or projecting into the property from immediately adjacent or nearby properties.

  - Liquefaction: The subject site is not within a liquefaction hazard zone (Riverside County, 2003). Groundwater within the subject site is reported to be in excess of 50 feet below existing ground surface. Due to deep groundwater and relatively dense alluvial soils underlying the site, it is our opinion that potential for liquefaction at the site is low.

DRAFT DOCUMENT

- Seismic densification: Seismically-induced dry settlement is expected to be minimal to moderate. We anticipate that the near-surface loose soil deposits susceptible to such seismically induced settlement will be removed and compacted during grading.

- **Grading Considerations**: Grading of the roadway and installation of utilities will be readily accomplished with conventional heavy duty earth moving equipment. Slopes exposing loose or friable non-cohesive granular soils may require removal and recompaction. Site soils should be considered highly erosive and protective measures should be considered in the design.

3.6 Cactus Avenue Roadway Improvements

The proposed roadway improvements are for Cactus Avenue and are bounded on the east by Merwin Street and on the west by Wilmot Street, (see Figure 1).

- **Site Specific Geology**: The roadway improvements are located near the toe of the prominent granitic bedrock hillside known as Mount Russell. These improvements are underlain by older alluvium which is in-turn underlain by Cretaceous-aged granitic bedrock, (see Figure 2).

- **Surface Water and Groundwater**: No surface water was observed during the site visit, however there is an unimproved drainage culvert to the north that may carry water during periods of heavy rain. Ground water is not anticipated to be encountered to the depths anticipated for construction.

- **Site Specific Faulting**: No faulting was observed, known to exist onsite, or projected into this site.

- **Secondary Seismic Hazards**: Secondary hazards that might be associated with severe ground shaking during an earthquake are as follows:

  - Ground rupture: Our review of previous investigations and current observations of site conditions indicate no active or potentially active faulting on site.

  - Seiches and Tsunamis: Due to site elevation and great distance from large bodies of water, the possibility of seiches, tsunamis and inundation on this site is considered very low to nil.

  - Landsliding: No landslides have been previously mapped by others or identified by us during our review of this property. Landsliding due to seismic activity is not anticipated at the site due to relatively flat lying terrain.

DRAFT DOCUMENT

- Rock falls: The steep sloping hillsides near the site contain many potentially loose boulders. The potential for rock fall due to either erosion or seismic ground shaking is considered possible in this area. However, due to the distant nature of the roadway improvement to the rock covered hillside, the hazard from rockfill to impact this section of roadway is minimal.

- Ground Fissuring and Subsidence: No evidence of ground fissuring was observed or been reported within the project boundary, or projecting into the property from immediately adjacent or nearby properties.

- Liquefaction: The subject site is not within a liquefaction hazard zone (Riverside County, 2003). Due to relatively dense granitic bedrock and older alluvial soils the potential for liquefaction at the subject site is considered very low to nil.

- Seismic densification: We anticipate that the near-surface loose soil deposits susceptible to such seismically induced settlement will be removed and compacted during grading.

- **Grading Considerations**: Grading on this site may encounter dense older alluvium and very dense to non-rippable bedrock. Oversize rock may need to be exported off this site.

3.7 Brodiaea Avenue to Cactus Avenue Drainage Improvements

The proposed drainage improvements are for an existing unimproved drainage culvert which is bounded on the north by Brodiaea Avenue and on the south by Cactus Avenue see, Figure 1.

- **Site Specific Geology**: The drainage improvements are located near the toe of the prominent granitic bedrock hillside known as Mount Russell. These improvements are underlain by younger alluvium and older alluvium which is in-turn underlain by Cretaceous-aged granitic bedrock, (see Figure 2).

- **Surface Water and Groundwater**: No surface water was observed during the site visit, however during periods of heavy rain the drainage channel will contain water. Ground water is not anticipated to be encountered during dry season, but could be encountered during the seasonal rains.

- **Site Specific Faulting**: No faulting was observed, known to exist onsite, or projected into this site.

DRAFT DOCUMENT

- **Secondary Seismic Hazards**: Secondary hazards that might be associated with severe ground shaking during an earthquake are as follows:

  - Ground rupture: Our review of previous investigations and current observations of site conditions indicate no active or potentially active faulting on site.

  - Seiches and Tsunamis: Due to site elevation and great distance from large bodies of water, the possibility of seiches, tsunamis and inundation on this site is considered very low to nil.

  - Landsliding: No landslides have been previously mapped by others or identified by us during our review of this property. Landsliding due to seismic activity is not anticipated at the site due to relatively flat lying terrain. A stability analysis of the drainage slopes should be performed when the design configuration is known.

  - Rock falls: Due to the lack of boulders and/or elevated rock out-cropping on or immediately adjacent to this site, the possibility of rock fall to impact the proposed drainage culvert is considered low.

  - Ground Fissuring and Subsidence: No evidence of ground fissuring was observed or been reported within the project boundary, or projecting into the property from immediately adjacent or nearby properties.

  - Liquefaction: The subject site is not within a liquefaction hazard zone (Riverside County, 2003). Due to relatively dense granitic bedrock and older alluvial soils the potential for liquefaction at the subject site is considered very low to nil.

  - Seismic densification: We anticipate that the near-surface loose soil deposits susceptible to such seismically induced settlement will be removed and compacted during grading.

- **Grading Considerations**: Grading of the drainage culvert will be readily accomplished with conventional heavy duty earth moving equipment. Slopes exposing loose or friable non-cohesive granular soils may require removal and recompaction. Site soils should be considered highly erosive and protective measures should be considered in the design.

DRAFT DOCUMENT

3.8 Brodiaea Avenue and Wilmot Street Sewer Improvements

The proposed sewer improvements are for Brodiaea Avenue from Merwin Street to Wilmot Street and for Wilmot Street from Brodiaea Avenue to Cactus Avenue, (see Figure 1).

- **Site Specific Geology**: The sewer improvements are underlain by younger and older alluvial material that appears to have been generated from the surrounding hills (see Figure 2).

- **Surface Water and Groundwater**: No surface water was observed during the site visit, however there is an unimproved drainage culvert to the south that may carry water during periods of heavy rain. Ground water is not anticipated to be encountered during dry season, but could be encountered during the seasonal rains.

- **Site Specific Faulting**: No faulting was observed, known to exist onsite, or projected into this site.

- **Secondary Seismic Hazards**: Secondary hazards that might be associated with severe ground shaking during an earthquake are as follows:

  - Ground rupture: Our review of previous investigations and current observations of site conditions indicate no active or potentially active faulting on site.

  - Seiches and Tsunamis: Due to site elevation and great distance from large bodies of water, the possibility of seiches, tsunamis and inundation on this site is considered very low to nil.

  - Landsliding: No landslides have been previously mapped by others or identified by us during our review of this property. Landsliding due to seismic activity is not anticipated at the site due to relatively flat lying terrain.

  - Rock falls: Due to the lack of boulders and/or elevated rock out-cropping on or immediately adjacent to this site, the possibility of rock fall to impact the proposed improvements is considered low.

  - Ground Fissuring and Subsidence: No evidence of ground fissuring was observed or been reported within the project boundary, or projecting into the property from immediately adjacent or nearby properties.

DRAFT DOCUMENT

- Liquefaction: The subject site is not within a liquefaction hazard zone (Riverside County, 2003). Due to relatively dense granitic bedrock and older alluvial soils the potential for liquefaction at the subject site is considered very low to nil.

- Seismic densification: Seismically-induced dry settlement is expected to be minimal and should not be a geotechnical constraint.

- **Grading Considerations**: Grading/excavation for the sewer improvements will be readily accomplished with conventional heavy duty earth moving equipment.

3.9 Cottonwood Avenue Water and Utility Improvements

The proposed water and utility improvements are for Cottonwood Avenue and are bounded on the east by Redlands Boulevard and on the west by Moreno Beach Drive, (see Figure 1). A short section of Moreno Beach Drive south of Cottonwood Avenue also has proposed water and utility improvements.

- **Site Specific Geology**: The western portion of the water and utility improvements is underlain by older alluvium which is in-turn underlain by Cretaceous-aged granitic bedrock, whereas the eastern portion of the improvements is underlain by younger alluvium, (see Figure 2).

- **Surface Water and Groundwater**: No surface water was observed during the site visit, however there is a partially improved drainage culvert to the north, paralleling Quincy Drive that does carry water during periods of heavy rain. Ground water is not anticipated to be encountered during dry season, but could be encountered during the seasonal rains.

- **Site Specific Faulting**: No faulting was observed, known to exist onsite, or projected into this site.

- **Secondary Seismic Hazards**: Secondary hazards that might be associated with severe ground shaking during an earthquake are as follows:

  - Ground rupture: Our review of previous investigations and current observations of site conditions indicate no active or potentially active faulting on site.

  - Seiches and Tsunamis: Due to site elevation and great distance from large bodies of water, the possibility of seiches, tsunamis and inundation on this site is considered very low to nil.

DRAFT DOCUMENT

- Landsliding: No landslides have been previously mapped by others or identified by us during our review of this property. Landsliding due to seismic activity is not anticipated at the site due to relatively flat lying terrain.

- Rock falls: The steep sloping hillsides near the site contain many potentially loose boulders. The potential for rock fall due to either erosion or seismic ground shaking is considered high in this area. Remedial measures such as rock removal, anchoring, catchment areas, rock fences, or setbacks may be required. The potential hazard from individual rocks should be assessed as site grading plans are developed.

- Ground Fissuring and Subsidence: No evidence of ground fissuring was observed or been reported within the project boundary, or projecting into the property from immediately adjacent or nearby properties.

- Liquefaction: The subject site is not within a liquefaction hazard zone (Riverside County, 2003). Groundwater within the subject site is reported to be in excess of 50 feet below existing ground surface. Due to deep groundwater and relatively dense alluvial soils underlying the site, it is our opinion that potential for liquefaction at the site is very low.

- Seismic densification: Seismically-induced dry settlement is expected to be minimal and should not be a geotechnical constraint.

- **Grading Considerations**: Grading on this site may encounter dense older alluvium and very dense to non-rippable bedrock. Oversize rock may need to be exported off this site.

3.10 Redlands Boulevard Water and Utility improvements

The proposed water and utility improvements are for Redlands Boulevard and are bounded on the north by Highway 60 and on the south by Alessandro Boulevard, (see Figure 1).

- **Site Specific Geology**: These improvements are underlain by younger alluvial material that appears to have been generated from the surrounding hills, (see Figure 2). Based on our subsurface investigation of the property immediately east of Redlands Boulevard (Leighton. 2012), the alluvial soils are a minimum of 50 feet in thickness.

- **Surface Water and Groundwater**: No surface water was observed along Redlands Boulevard. The potential for surface runoff in the area should be anticipated due to the existence of drainage channels that parallel Redlands

DRAFT DOCUMENT

Boulevard. Based on our subsurface investigation on the property immediately east of Redlands Boulevard (Leighton. 2012), ground water is expected to be greater than 50 feet deep and should not be a constraint to construction of the basins. However, shallow perched ground water is not anticipated to be encountered during dry season, but could be encountered during the seasonal rains.

- **Site Specific Faulting**: No faulting was observed, known to exist onsite, or projected into this site.

- **Secondary Seismic Hazards**: Secondary hazards that might be associated with severe ground shaking during an earthquake are as follows:

  - Ground rupture: Our review of previous investigations and current observations of site conditions indicate no active or potentially active faulting on site.

  - Seiches and Tsunamis: Due to site elevation and great distance from large bodies of water, the possibility of seiches, tsunamis and inundation on this site is considered very low to nil.

  - Landsliding: No landslides have been previously mapped by others or identified by us during our review of this property. Landsliding due to seismic activity is not anticipated at the site due to relatively flat lying terrain.

  - Rock falls: Due to the lack of boulders and/or elevated rock out-cropping on or immediately adjacent to this site, the possibility of rock fall to impact the proposed improvements is considered low.

  - Ground Fissuring and Subsidence: No evidence of ground fissuring was observed or been reported within the project boundary, or projecting into the property from immediately adjacent or nearby properties.

  - Liquefaction: The subject site is not within a liquefaction hazard zone (Riverside County, 2003). Groundwater within the subject site is reported to be in excess of 50 feet below existing ground surface. Due to deep groundwater and relatively dense alluvial soils underlying the site, it is our opinion that potential for liquefaction at the site is very low.

  - Seismic densification: Seismically-induced dry settlement is expected to be minimal and should not be a geotechnical constraint.

DRAFT DOCUMENT

- **Grading Considerations**: Construction will be readily accomplished with conventional heavy duty earth moving equipment.

3.11 Eucalyptus Avenue to Fir Avenue Water Improvements

The proposed water improvements are for Eucalyptus Avenue in the west connecting to Fir Avenue in the east and are bounded on the east by Redlands Boulevard and on the west by Moreno Beach Drive, (see Figure 1). The alignment also transects through an existing citrus grove.

- **Site Specific Geology**: The water improvements are underlain by younger and older alluvial material that appears to have been generated from the surrounding hills (see Figure 2).

- **Surface Water and Groundwater**: No surface water was observed during the site visit, however there is an unimproved drainage culvert that transects the alignment at Quincy Drive, and does carry water during periods of heavy rain. Shallow perched ground water is not anticipated to be encountered during dry season, but could be encountered during the seasonal rains.

- **Site Specific Faulting**: No faulting was observed, known to exist onsite, or projected into this site.

- **Secondary Seismic Hazards**: Secondary hazards that might be associated with severe ground shaking during an earthquake are as follows:

  - Ground rupture: Our review of previous investigations and current observations of site conditions indicate no active or potentially active faulting on site.

  - Seiches and Tsunamis: Due to site elevation and great distance from large bodies of water, the possibility of seiches, tsunamis and inundation on this site is considered very low to nil.

  - Landsliding: No landslides have been previously mapped by others or identified by us during our review of this property. Landsliding due to seismic activity is not anticipated at the site due to relatively flat lying terrain. A stability analysis of the existing channel slopes, at Quincy Drive, should be performed when the design configuration is known.

  - Rock falls: Due to the lack of boulders and/or elevated rock out-cropping on or immediately adjacent to this site, the possibility of rock fall to impact the proposed basin is considered low.

DRAFT DOCUMENT

- Ground Fissuring and Subsidence: No evidence of ground fissuring was observed or been reported within the project boundary, or projecting into the property from immediately adjacent or nearby properties.

- Liquefaction: The subject site is not within a liquefaction hazard zone (Riverside County, 2003). Groundwater within the subject site is reported to be in excess of 50 feet below existing ground surface. Due to deep groundwater and relatively dense alluvial soils underlying the site, it is our opinion that potential for liquefaction at the site is very low.

- Seismic densification: Seismically-induced dry settlement is expected to be minimal and should not be a geotechnical constraint.

- **Grading Considerations**: Construction will be readily accomplished with conventional heavy duty earth moving and excavatioin equipment. The slopes of the existing channel may expose loose or friable non-cohesive granular soils and may require removal and recompaction. Site soils should be considered highly erosive and protective measures should be considered in the design.

3.12 Potential Water Reservoir & Access Area "C"

Reservoir Area "C" consists of a potential tank pad that is located northwest of the intersection of Quincy Drive and Cottonwood Avenue, west of the World Logistics Center.

- **Site Specific Geology**: The potential reservoir is located within a prominent cretaceous-aged granitic bedrock hillside. The reservoir pad area will most likely be underlain by dense granitic bedrock material with the lower lying portions of the site underlain by dense older alluvial material, see Figure 2.

- **Surface Water and Groundwater**: No surface water was observed during the site visit. During periods of heavy rain, drainage patterns will be created due to the steep topography and should be included into design of any cut or fill slopes. Ground water is not anticipated to be encountered in the elevated granitic bedrock material.

- **Site Specific Faulting**: No faulting was observed, known to exist onsite, or projected into this site.

- **Secondary Seismic Hazards**: Secondary hazards that might be associated with severe ground shaking during an earthquake are as follows:

DRAFT DOCUMENT

- Ground rupture: Our review of previous investigations and current observations of site conditions indicate no active or potentially active faulting on site.

- Seiches and Tsunamis: Due to site elevation and great distance from large bodies of water, the possibility of seiches, tsunamis and inundation on this site is considered very low to nil.

- Landsliding: No landslides have been previously mapped by others or identified by us during our field investigation within the property. Landsliding due to seismic activity is not anticipated due to the nature of the granitic bedrock underlying the site.

- Rock falls: The steep sloping hillsides on the site contain many potentially loose boulders. The potential for rock fall due to either erosion or seismic ground shaking is considered high in this area. Remedial measures such as rock removal, anchoring, catchment areas, rock fences, or setbacks may be required. The potential hazard from individual rocks should be assessed as site grading plans are developed.

- Ground Fissuring and Subsidence: No evidence of ground fissuring was observed or been reported within the project boundary, or projecting into the property from immediately adjacent or nearby properties.

- Liquefaction: The subject site is not within a liquefaction hazard zone (Riverside County, 2003). Due to relatively dense granitic bedrock and older alluvial soils the potential for liquefaction at the subject site is considered very low to nil.

- Seismic densification: We anticipate that the near-surface loose soil deposits susceptible to such seismically induced settlement will be removed and compacted during grading.

- **Grading Considerations**: Grading on this site and access road areas will likely encounter non-rippable bedrock, as either boulders on the surface or non-rippable rock at depth. Oversize rock may need to be exported off this site. Slopes exposing loose rock or unfavorable structure may require removal and recompaction to create a stable slope configuration. Import soil or rock crushing will likely be required to create the compacted fill pad.

3.13 Redlands Boulevard Ramp Improvements

The proposed ramp improvements are for the interchange of SR-60 freeway and Redlands Boulevard (see Fig. 1).

DRAFT DOCUMENT

- **Site Specific Geology**: This site is underlain by younger and older alluvial material that appears to have been generated from the surrounding hills (see Figure 2). Based on our subsurface investigation of the property immediately southeast of the proposed ramp improvements (Leighton, 2012), the alluvial soils are a minimum of 50 feet in thickness.

- **Surface Water and Groundwater**: No surface water was observed within the area of ramp improvements. Based on our subsurface investigation on the property immediately to the southeast of the site (Leighton, 2012), ground water is expected to be greater than 50 feet deep and should not be a constraint to construction of the ramp improvements.

- **Site Specific Faulting**: No faulting was observed, known to exist onsite, or projected into this site.

- **Secondary Seismic Hazards**: Secondary hazards that might be associated with severe ground shaking during an earthquake are as follows:

  - Ground rupture: Our review of previous investigations and current observations of site conditions indicate no active or potentially active faulting on site.

  - Seiches and Tsunamis: Due to site elevation and great distance from large bodies of water, the possibility of seiches, tsunamis and inundation on this site is considered very low to nil.

  - Landsliding: No landslides have been previously mapped by others or identified by us during our review of this property. Landsliding due to seismic activity is not anticipated at the site due to relatively flat lying terrain.

  - Rock falls: Due to the lack of boulders and/or elevated rock out-cropping on or immediately adjacent to this site, the possibility of rock fall to impact the proposed basin is considered low.

  - Ground Fissuring and Subsidence: No evidence of ground fissuring was observed or been reported within the project boundary, or projecting into the property from immediately adjacent or nearby properties.

  - Liquefaction: The subject site is not within a liquefaction hazard zone (Riverside County, 2003). Groundwater within the subject site is reported to be in excess of 50 feet below existing ground surface. Due to deep groundwater and relatively dense alluvial soils underlying the site, it is our opinion that potential for liquefaction at the site is low.

DRAFT DOCUMENT

- Seismic densification: We anticipate that the near-surface loose soil deposits susceptible to such seismically induced settlement will be removed and compacted during grading.

- **Grading Considerations:** Grading of the ramp improvements will be readily accomplished with conventional heavy duty earth moving equipment. Slopes exposing loose or friable non-cohesive granular soils may require removal and recompaction. Site soils should be considered highly erosive and protective measures should be considered in the design. The existing embankment fills should be evaluated once design plans become available.

3.14 Theodore Street Interchange Improvements

The proposed ramp improvements are for the interchange of SR-60 freeway and Theodore Street (see Fig. 1).

- **Site Specific Geology**: This site is underlain by younger and older alluvial material that appears to have been generated from the surrounding hills as well as previously placed artificial fill, (see Figure 2). Based on our subsurface investigation of the property immediately southwest of the ramp improvements (Leighton, 2012), the alluvial soils are a minimum of 50 feet in thickness.

- **Surface Water and Groundwater**: No surface water was observed within the area of the ramp improvements. Based on our subsurface investigation on the property immediately to the southwest of the site (Leighton, 2012), ground water is expected to be greater than 50 feet deep and should not be a constraint to construction of the ramp improvements.

- **Site Specific Faulting**: An unnamed splay of the San Jacinto Segment of the San Jacinto Fault (also known as the Claremont Fault) transects the ramp improvements (see Figure 2). This fault is also identified as a Riverside County Fault Zone (see Figure 3). Surface expression of this fault splay, such as scarps, offset drainages or other lineaments were not observed during this or previous studies. No subsurface investigation has been performed to confirm the existence of this fault splay. However, this fault is considered active based on the County geologic hazard maps

- **Secondary Seismic Hazards**: Secondary hazards that might be associated with severe ground shaking during an earthquake are as follows:

  - Ground rupture: Our review of previous investigations and current observations of the subject site and adjacent areas is that there is no active faulting on site. However, the potential for ground

DRAFT DOCUMENT

subsidence/fissuring should be considered low to moderate for this site due to the currently mapped un-named fault splay transecting this interchange. The unnamed fault splay, postulated to exist crossing the planned improvements (see Figure 2), is considered to be active by Riverside County and is therefore considered to be a constraint to the planned improvements.

- Seiches and Tsunamis: Due to site elevation and great distance from large bodies of water, the possibility of seiches, tsunamis and inundation on this site is considered very low to nil.

- Landsliding: No landslides have been previously mapped by others or identified by us during our review of this property. Landsliding due to seismic activity is not anticipated at the site due to relatively flat lying terrain.

- Rock falls: Due to the lack of boulders and/or elevated rock out-cropping on or immediately adjacent to this site, the possibility of rock fall to impact the proposed basin is considered low.

- Ground Fissuring and Subsidence: No evidence of ground fissuring was observed or been reported within the project boundary, or projecting into the property from immediately adjacent or nearby properties.

- Liquefaction: The subject site is not within a liquefaction hazard zone (Riverside County, 2003). Groundwater within the subject site is reported to be in excess of 50 feet below existing ground surface. Due to deep groundwater and relatively dense alluvial soils underlying the site, it is our opinion that potential for liquefaction at this site is low.

- Seismic densification: We anticipate that the near-surface loose soil deposits susceptible to such seismically induced settlement will be removed and compacted during grading.

- **Grading Considerations**: Grading of the ramp improvements will be readily accomplished with conventional heavy duty earth moving equipment. Slopes exposing loose or friable non-cohesive granular soils may require removal and recompaction. Site soils should be considered highly erosive and protective measures should be considered in the design. The existing embankment fills should be evaluated once design plans become available.

DRAFT DOCUMENT

4.0 SUMMARY OF FINDINGS AND CONCLUSIONS

Based on our preliminary geotechnical evaluation, the following is a summary of the primary geotechnical factors that may affect the various sites.

- Granitic bedrock underlying potential water reservoir Area "C", water and utility improvements for Cottonwood Avenue, and roadway improvements for Cactus Avenue may encounter non-rippable bedrock at depth.

- The steep sloping hillsides near the Cactus Avenue roadway improvements, Cottonwood Avenue water and utility improvements, and the potential water reservoir and access Area "C" contain many potentially loose boulders. The potential for rock fall due to either erosion or seismic ground shaking is considered high in these areas. Remedial measures such as rock removal, anchoring, catchment areas, rock fences, or setbacks may be required. The potential hazard from individual rocks should be assessed as site grading plans are developed.

- Undocumented fill, low density alluvium and San Timoteo formation materials underling water reservoir Area "A" and Area "B" are considered to be potentially compressible. For planning purposes, the upper 10 to 15 feet below tank ring pads and 3 to 10 feet below access roadway pavements may require removal and recompaction. Deeper removals may be required locally based on actual soils encountered or planned grading configuration. The existing onsite soils are generally suitable for reuse as fill during proposed grading provided they are free of organic material, debris and oversize rock greater than 12-inches in greatest diameter.

- Cut slopes excavated into dense granitic bedrock should be both statically and seismically stable at 2:1 (horizontal to vertical) inclinations. Due to the variable nature of site alluvial and San Timoteo formation soils, cut slopes in excess of 5 feet in vertical height excavated in these materials should be constructed as replacement fill slopes as depicted in Appendix B.

- Potential water reservoir Area "A" is located within the State Earthquake Fault Zones, see Figure 3, and should be further evaluated.

- Potential water reservoir Area "A" and Area "B" have landslide features either within the selected tank pad, adjacent to or above the tank pad, or along the slopes underlying the pad or access road areas and should be further evaluated.

- Strong ground shaking and settlement (seismic densification) may occur at these sites due to local earthquake activity and close proximity to known active faults.

DRAFT DOCUMENT

- Groundwater was not encountered up to maximum explored depth of 51.5 feet during our nearby site investigations. Shallow groundwater is not expected to be a factor during site excavation and construction during dry seasons.

- Perched water may develop in areas of soils with contrasting permeabilities, possibly resulting in saturated fills or seepage from slopes. This condition is often a result of site water use and irrigation practices.

- Fill slopes are anticipated for the proposed development. Unprotected slope faces will be susceptible to erosion. This risk can be reduced by planting the slopes as soon as possible after grading, and by maintaining proper erosion control measures.

DRAFT DOCUMENT

5.0 PRELIMINARY DESIGN CONSIDERATIONS

5.1 Additional Geotechnical Studies

This geotechnical review is limited to our observations of site surficial exposures, review of published maps and reports. As specific facility locations and access roads are selected, detailed specific geotechnical subsurface investigations should be performed to provide recommendations for remedial grading and foundation design.

5.2 Structural Fills

The onsite soils for the various sites are considered suitable for reuse as compacted fill, provided they are free of organic materials, debris and oversize materials (greater than 8 inches in greatest dimension). The optimum lift thickness to produce a uniformly compacted fill will depend on the type and size of compaction equipment used. In general, fill should be placed in uniform lifts not exceeding 8 inches in thickness. Fill soils should be placed and compacted to a minimum 90 percent relative compaction (as determined by ASTM Test Method D1557) and at or above the optimum moisture content.

5.3 Import Soils

If import soils are needed to establish the site design elevations, it should be granular in nature, relatively free of organic material, have an expansion index less than 51 (per ASTM Test Method D4829), and have a low corrosion impact to the proposed improvements. Import soils, if needed, and potential borrow sites should be evaluated by the geotechnical consultant prior to being imported to the site.

5.4 Trench Excavation and Backfill

Excavation of utility trenches should be performed in accordance with the project plans, specifications and the California Construction Safety Orders (2003 Edition or more current). The contractor must be responsible for providing a "competent person" as defined in Article 6 of the California Construction Safety Orders. Contractors should be advised that sandy soils (such as fills generated from the onsite alluvium) could make excavations particularly unsafe. All safety precautions should be properly implemented at all times. In addition, excavations at or near the toe of slopes and/or parallel to slopes may be highly unstable due to the increased driving force and load on the trench wall. Spoil piles from the excavation(s) and construction equipment should be kept away

DRAFT DOCUMENT

from the sides of the trenches. Leighton does not consult in the area of safety engineering.

DRAFT DOCUMENT

6.0 LIMITATIONS

This preliminary report was necessarily based in part upon data obtained from a limited number of observances, site visits, histories of occurrences, and limited information on historical events and observations. Such information is necessarily incomplete and future site specific geotechnical/geologic studies are recommended. The nature of many sites is such that differing characteristics can be experienced within small distances and under various climatic conditions. Changes in subsurface conditions can and do occur over time.

This geotechnical report was prepared for Highland Fairview needs, directions, and requirements. This report is not authorized for use by, and is not to be relied upon by any party except Highland Fairview, and its successors and assigns as owner of the property, with whom Leighton and Associates, Inc. has contracted for the work. Use of or reliance on this report by any other party is at that party's risk. Unauthorized use of or reliance on this report constitutes an agreement to defend and indemnify Leighton and Associates, Inc. from and against any liability which may arise as a result of such use or reliance, regardless of any fault, negligence, or strict liability of Leighton and Associates, Inc.

The client is referred to Appendix C regarding important information provided by the Associated Soil and Foundation Engineers (ASFE) on geotechnical engineering studies and reports and their applicability.

DRAFT DOCUMENT

TABLE 1				
Site	**Location**	**Geology / Geomorphology**	**Geotechnical Constraints**	**Recommendations**
A	North of Project: Ironwood Avenue & Theodore Street	Potential pad in San Timoteo formation	- Pad within Earthquake Fault Zone - Loose surficial materials. - Existing landslides	Additional studies for remedial grading, onsite faulting, landslide and slope stability.
B	East of Gilman Springs Rd & south of SR-60 – Badlands area	Potential pad in San Timoteo formation	- Loose surficial materials. - Existing landslides	Additional studies for remedial grading, landslide and slope stability.
C	West of Project: Moreno Beach Drive & Cottonwood Avenue	Potential pad along ex. granitic hilltop	- Potential Rock Fall - Non-rippable and oversize rock may be encountered in deep cuts	Additional studies for rock rippability, rock fall evaluation, remedial grading and slope stability.
Debris Basins	Gilman Springs Rd. - south of SR-60 and north of Cactus Ave. if extended– Badlands area	4 potential debris basins in alluvial fan deposits	- Loose/erosive surficial materials - County and State Fault study zones transects three basins	Additional studies for remedial grading, slope stability, possible relocate basins out of fault zones.
Gilman Springs Improvements	Gilman Springs Rd. - south of SR-60 and north of Cactus Ave. if extended– Badlands area	Improvements in San Timoteo formation and alluvial fan deposits	- Loose surficial materials.	Additional studies on remedial grading and slope stability.
Cactus Avenue Improvements	Cactus Ave. – west of Merwin St. and east of Wilmont St.	Improvements in older alluvium underlain by Cretaceous-aged granitic bedrock	- Potential Rock Fall - Non-rippable and oversize rock may be encountered in deep cuts	Additional studies for remedial grading and rock fall evaluation.
Existing Drainage Improvements	West of project - south of Brodiaea Ave. and north of Cactus Ave.	Improvements in younger/older alluvium underlain by Cretaceous-aged granitic bedrock	- Loose/Erosive surficial materials	Additional studies for slope stability of cut slopes or embankment fills
Brodiaea Avenue/Wilmot Street Sewer	Brodiaea Ave. – Merwin St. to Willmot St. and Wilmot St. – Brodiaea Ave. to Cactus Ave.	Improvements in younger/older alluvium	- Loose surficial materials.	Additional studies on sewer alignment per EMWD requirements.
Cottonwood Avenue	Cottonwood Ave. – west of Redlands Blvd. and east of Moreno Beach Dr.	Improvements in younger/older alluvium underlain by Cretaceous-aged granitic bedrock	- Potential Rock Fall - Non-rippable and oversize rock may be encountered in deep cuts	Additional studies for rock rippability and rock fall evaluation.
Redlands Boulevard	Redlands Blvd. – south of SR – 60 and north of Alessandro Blvd.	Improvements in younger/older alluvium	- Loose surficial materials.	Additional studies for remedial grading for pavement improvements and water and utility alignments per EMWD.
Eucalyptus Avenue/Fir Avenue Water	Eucalyptus Ave. to Fir Ave. between Redlands Blvd. and Moreno Beach Dr.	Improvements in younger/older alluvium	- Loose surficial materials, slope stability along existing drainage culvert.	Additional studies for water main alignment and slope stability.
Redlands Boulevard Ramp	Redlands Boulevard and SR-60	Improvements in younger/older alluvium	- Loose surficial materials.	Additional studies for remedial grading and pavements.
Theodore Street / SR-60 Interchange	Theodore St. and SR-60	Improvements in alluvium and older alluvial fan deposits	- Loose/Erosive surficial materials - County Fault study zone transects interchange.	Additional studies for possible active fault, remedial grading and foundations report as needed by Caltrans

DRAFT DOCUMENT

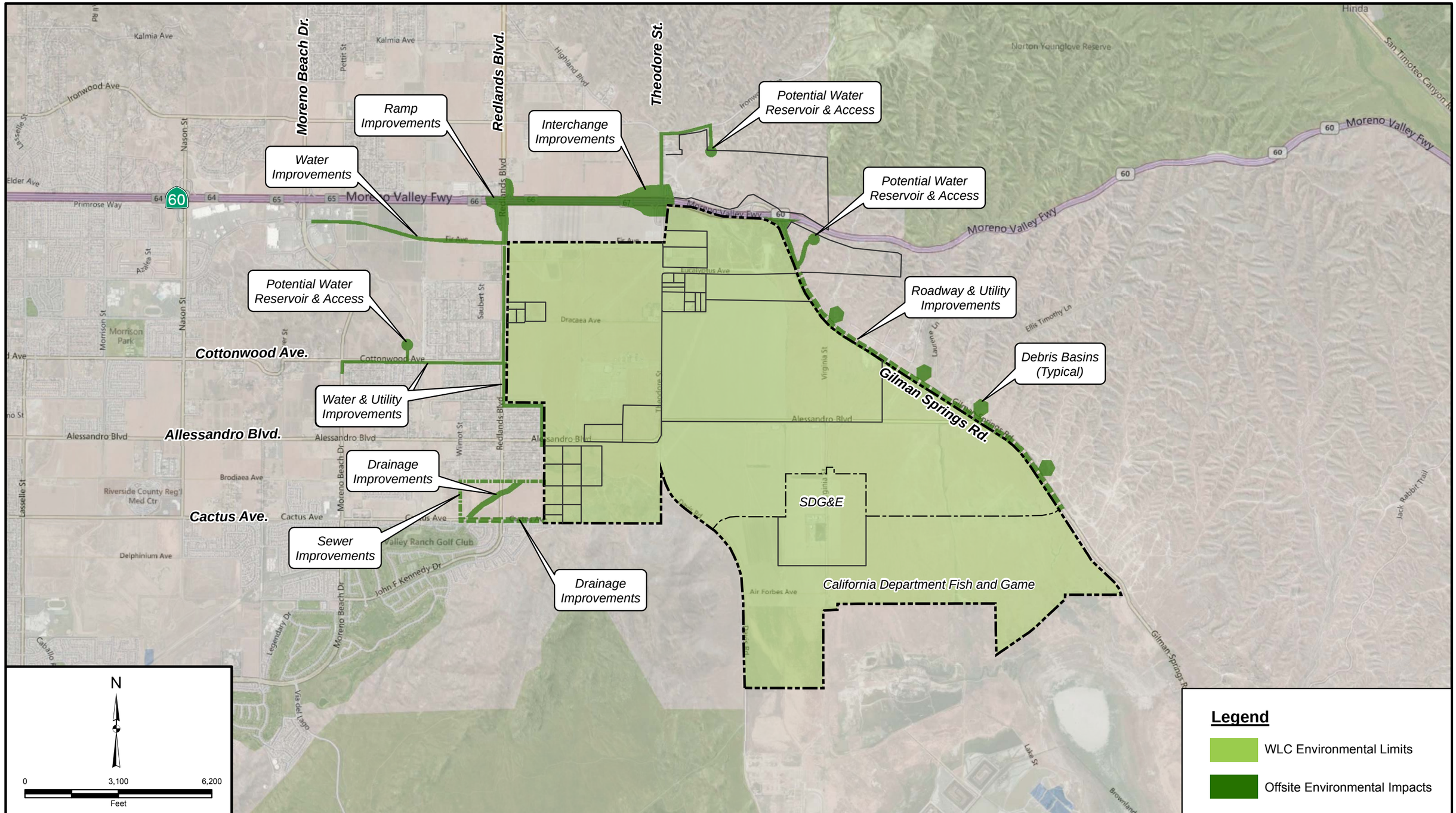

Project: 111061-126	Eng/Geol: SIS/RFR
Scale: 1 " = 3,000 '	Date: May, 2012

Base Map: Aerials Express, 2008
Thematic Info: Leighton
Author: (mmurphy)

SITE LOCATION MAP

World Logistics Center Specific Plan
Moreno Valley, California

Figure 1

Leighton

Map Saved as P:\drafting\111061\126\GIS\of_2012-05-18\Figure1.mxd on 5/21/2012 2:57:16 PM

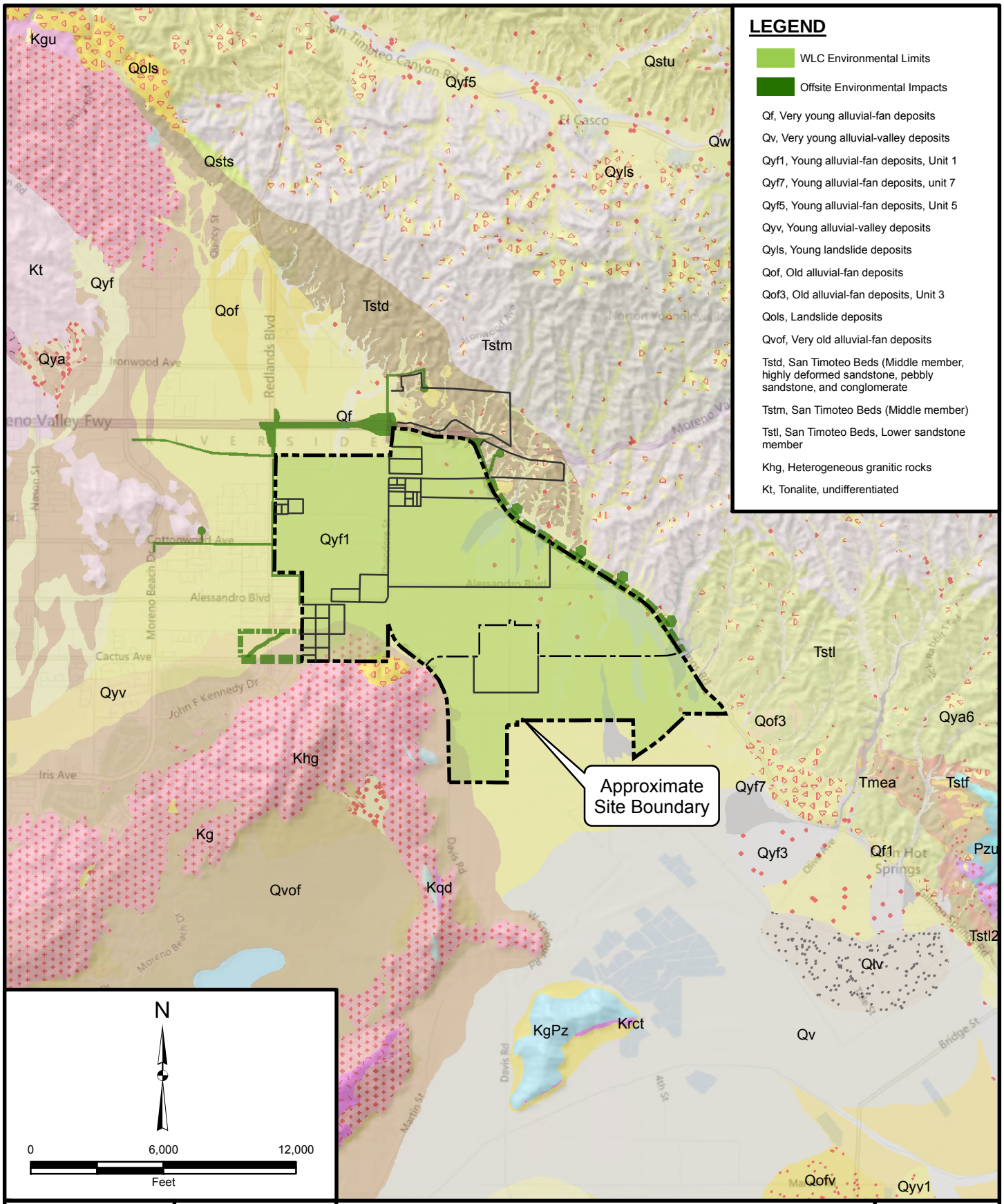

Project: 111061-126	Eng/Geol: SIS/RFR
Scale: 1 " = 6,000 '	Date: May, 2012

Base Map: ESRI Resource Center, 2010
Thematic Info: USGS, 2006, Geologic map of the San Bernardino and Santa Ana 30' x 60' quadrangles, California, Version 1.0, Open File Report 2006-1217
Author: (mmurphy)

REGIONAL GEOLOGY MAP

World Logistics Center Specific Plan
Moreno Valley, California

Figure 2

Leighton

Map Saved as P:\drafting\111061\126\GIS\of_2011-11-28\Figure2.mxd on 5/21/2012 2:55:42 PM

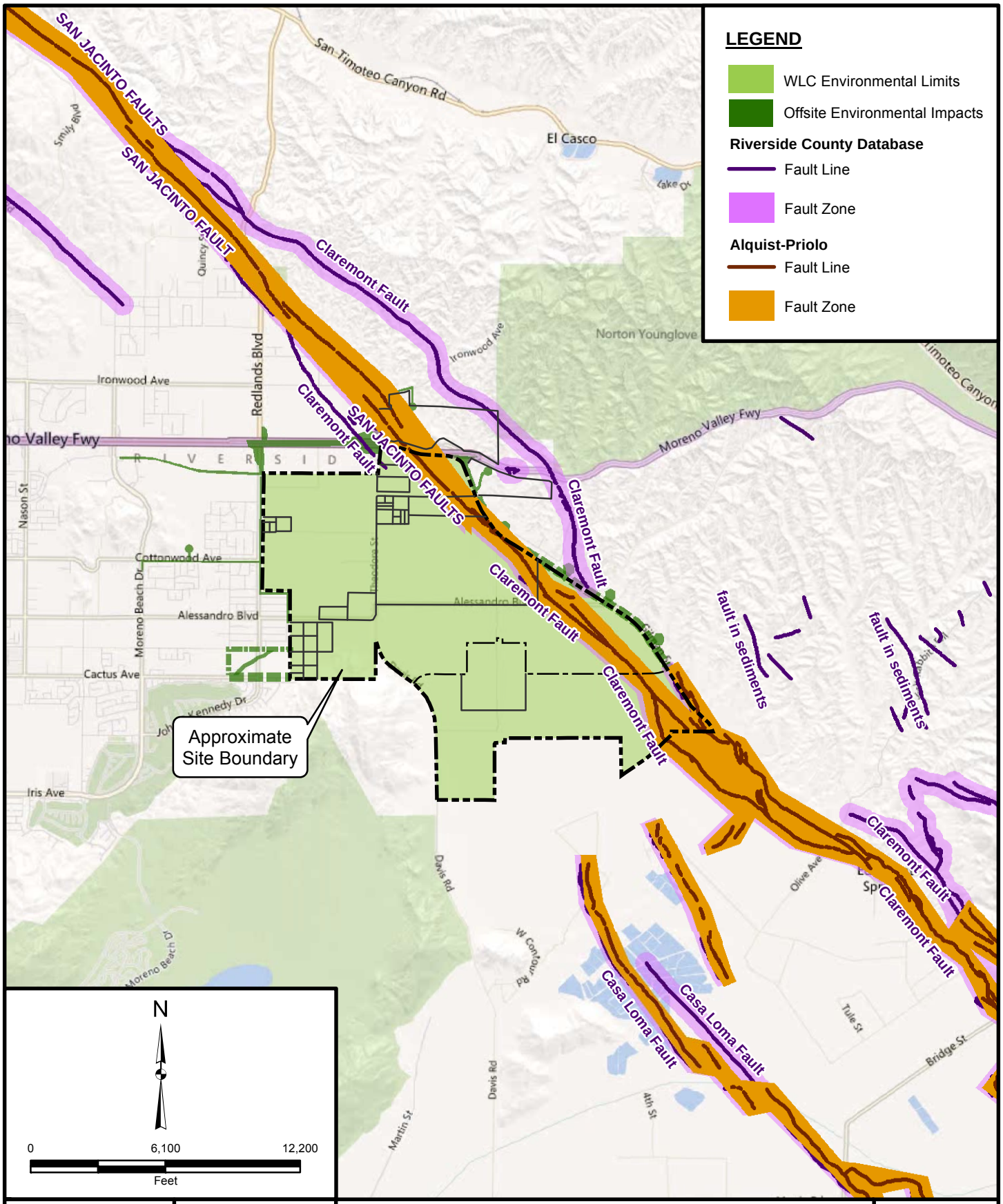

Project: 111061-126	Eng/Geol: SIS/RFR
Scale: 1 " = 6,000 '	Date: May, 2012

Base Map: ESRI Resource Center, 2010

Thematic Info: Riverside County, Alquist-Priolo, Leighton

Author: (mmurphy)

REGIONAL FAULT MAP

World Logistics Center Specific Plan
Moreno Valley, California

Figure 3

Leighton

Map Saved as P:\drafting\111061\126\GIS\of_2012-05-18\Figure3.mxd on 5/21/2012 3:24:54 PM